FIRE PROTECTION GENERAL NOTES:

1. CONTRACTOR TO VERIFY EXISTING CONDITIONS PRIOR TO THE START OF NEW WORK.
2. ALL EXISTING SPRINKLER HEADS SHALL NOT BE RE–USED. REMOVE & CAP OUTLET FOR FUTURE USE.
3. ADJUST EXISTING PIPES AND FIRE SPRINKLER HEADS AS REQUIRED FOR THE NEW WALL AND CEILINGS DESIGN.
4. FIRE SPRINKLER HEADS RELOCATION SHALL BE COORDINATED WITH LIGHTING AND A/C DIFFUSERS TO CENTER SPRINKLER HEADS WHERE LOCATION FALLS BETWEN LIGHTS. MAINTAIN SPRINKLERS HEAD 12"MIN. AWAY FROM EDGE OF LIGHT FIXTURE AND 24"MIN. AWAY FROM EDGE OF CEILING OR WALL AIR DIFFUSER.
5. DURING THE PERFORMANCE OF THE NEW WORK, IF A SLAB OR WALL PENETRATION IS NOT COVERED BY THE DESIGN, CONTRACTOR SHALL ADVISE ARCHITECT OF CONDITION AND PROVIDE CORRECTIVE ACTION AS DIRECTED BY ARCHITECT & OWNER.
6. SYSTEM SHOWN INCLUDES A CLASS 1 STANDPIPE SYSTEM, PER NFPA 101.11.8.2.2 ALREADY INSTALLED AND IN OPERATION.
7. SPRINKLER HEADS SHALL BE ADJUSTED AS REQUIRED. TO BE ON CENTER OF ACOUSTICAL TILE OR IN LINE WITH RECESSED LIGHTS IN GYPSUM BOARDS SOFFITS.
8. PROPOSED CEILING HEIGHT SHALL BE AS SHOWN IN THE ARCHITECTURAL DRAWINGS. PROPOSED CEILING HEIGHTS ARE TO BE VERIFIED BY CONTRACTOR CONSIDERING PROPOSED CEILING MOUNTED EQUIPMENT. ALL DISCREPANCIES SHALL BE BROUGHT TO THE ARCHITECT'S ATTENTION BEFORE PROCEEDING WITH THE WORK.
9. NEW SPRINKLER HEADS SHALL BE PROVIDED WITH ARMOVERS FROM THE EXISTING SHELL SPRINKLER SYSTEM AS INDICATED. ARMOVERS SHALL BE CONNECTED FROM SHELL SPRINKLER LOCATIONS WHERE SPRINKLERS HEADS HAVE BEEN INSTALLED ON 1" RISER OR DROP NIPPLES AND REDUCERS. FOR ARMOVERS WHERE SPRINKLERS HAVE BEEN INSTALLED DIRECTLY ON THE BRANCHLINE, TEES SHALL BE SUPPLIED FROM THE CLOSEST EXISTING SHELL SYSTEM BRANCHLINE LOCATION UTILIZING *VICTAULIC SNAP–LET OUTLET COUPLINGS – STYLE 925.*
10. NEW SPRINKLER HEADS SHALL BE SULLIED IN ACCORDANCE WITH EXISTING ZONE LAYOUT.
11. EXISTING HEADS REMAINING IN NON–COMBUSTIBLE CEILING SPACES AFTER CEILING MOUNTED SPRINKLERS HAVE BEEN INSTALLED, SHALL BE REMOVED AND PIPING CAPPED.
12. NEW SPRINKLER PIPING DIAMETERS SHALL BE 1" UNLESS NOTED OTHERWISE.
13. FIRE SEAL ALL PENETRATIONS WITH APPROVED U.L. LISTED FIRE CAILK MATERIAL.
14. ALL NEW PIPING TO BE 1" UNLESS NOTED OTHERWISE.

ARMOVER NOTES:

1. THE MAXIMUM NUMBER OF HEADS TO BE SUPPLIED FROM THE EXISTING PIPE SHALL BE AS FOLLOWS:
   - A. 1" DIAMETER PIPE – 2 SPRINKLER HEADS
   - B. 1¼" DIAMETER PIPE – 4 SPRINKLER HEADS
   - C. 1½" DIAMETER PIPE – 6 SPRINKLER HEADS
   - D. 2" DIAMETER PIPE – 9 SPRINKLER HEADS
2. HANGERS AND SUPPORTS SHALL BE AS FOLLOWS:
   - A. THE LENGTH OF ANY UNSUPPORTED ARMOVER SHALL NOT EXCEED 12 INCHES.
   - B. THE HANGER CLOSEST TO THE SPRINKLER SHALL BE OF THE TYPE THAT PREVENTS UPWARD MOVEMENT OF THE PIPING.
   - C. NEW SPRINKLER HEADS SHALL BE INSTALLED DIRECTLY ON THE FITTING AT THE END OF THE ARMOVER.
   - D. ALL PIPING SHALL BE SUPPORTED BY MEANS OF FM APPROVED AND U.L. LISTED HANGERS.
   - E. SPACING AND INSTALLATION SHALL BE IN ACCORDANCE WITH NFPA 13.
   - F. FOR HANGER ASSEMBLIES UNDER STEEL MEMBERS USE TOP BEAM CLAMPS, THREADED ROD AND PIPE RING.
   - G. PROVIDE ADJUSTABLE HANGERS AS REQUIRED FOR PROPER SUPPORT OF ALL PIPELINES.

FIRE PROTECTION LEGEND

- SPRINKLER PIPE
- PENDANT SPRINKLER HEAD, NEW SHALL BE MATCH EXISTING
- UPRIGHT SPRINKLER HEAD, NEW SHALL BE MATCH EXISTING
- SIDEWALL SPRINKLER HEAD, NEW SHALL BE MATCH EXISTING
- EXISTING HEAD BEING REMOVED OR RELOCATED
- RM DENOTES SPRINKLER HEADS TO BE REMOVED
- R DENOTES SPRINKLER HEADS NEW LOCATION
- ER DENOTES SPRINKLER HEADS TO BE RELOCATED
- N DENOTES NEW PENDENT SPRINKLER HEADS TO BE ADDED AS SHOWN.
- E DENOTES EXISTING HEAD TO REMAIN. ADJUST HIGH ACCORDING CEILING.
- ER R REMOVE EXISTING SPRINKLER HEAD AND ARM OVER TO CONNECT SPRINKLER HEADS NEW LOCATION (1" MIN. PIPE) SEE DETAIL.
- TIE TO NEW CONNECTION TO EXISTING PIPING.

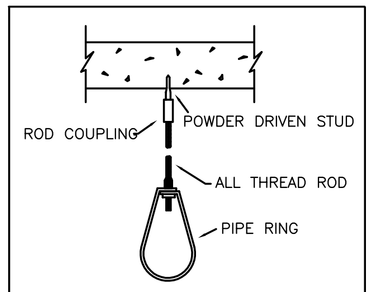

POWDER DRIVEN STUD HANGER N.T.S.

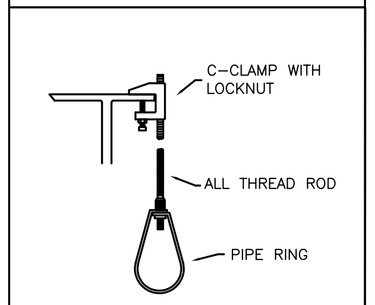

C-CLAMP HANGER

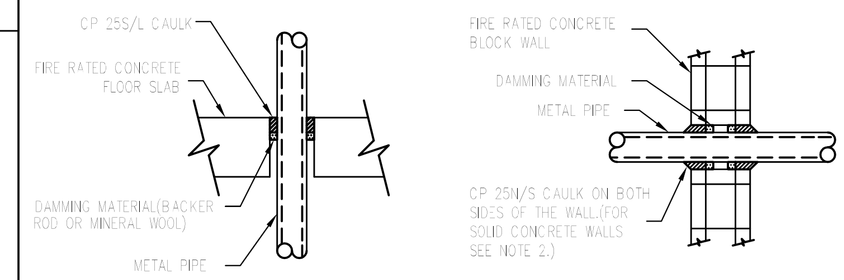

NOTES:

1. THE MAXIMUM ANNULAR SPACE TO BE FILLED IS 2–3/8". THE MINIMUM ANNULAR SPACE IS 1/4".
2. FOR SOLID CONCRETE WALLS, THE CP 25N/S CAULK MAY BE CENTERED IN THE WAL, WITH DAMMING MATERIAL ON BOTH SIDES OF THE CAULK.
3. USE CP 25S/L(SELF LEVELING) CAULK ON HORIZONTAL SURFACES WHEN SEALING OPENINGS FROM ABOVE THE PENETRATION. USE CP 25N/S(NO–SAG) CAULK ON VERTICAL SURFACES AND ON HORIZONTAL SURFACES WHEN SEALING FROM BELOW.
4. UP TO 40% SHRINKAGE OF CP 25N/S OF CP 25S/L CAULKS IS ACCEPTABLE AFTER INITIAL WET DEPTH INSTALLATION.
5. THE DEPTH OF THE CP 25 CAULKS DEPENDS ON THE INSULATION THICKNESS.

CAULK DEPTH(MIN.)	INSULATION
1"	1" THICK
2"	2–3" THICK

FIRE RATED PIPE PENETRATION DETAIL

NTS

UL SYSTEM # C-AJ-5001 (F RATINGS - 1-1/2, 2 AND 3 HOUR)

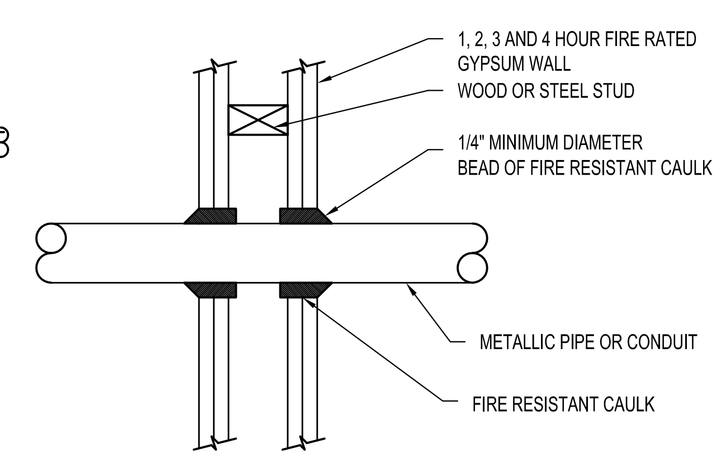

NOTES:

1. THE CAULK IS TO BE FORCED INTO THE ANNULAR SPACE TO THE MAXIMUM EXTENT POSSIBLE FLUSH WITH THE EXTERIOR OF THE PENETRATION SURFACE.
2. FINISH CAULKING WITH A 1/4" MINIMUM BEAD OF FIRE RESISTANT CAULK APPLIED TO THE PERIMETER OF THE CONDUIT/PIPE AT ITS EGRESS FROM THE WALL.
3. THE MAXIMUM ANNULAR SPACE IS NOT TO EXCEED 3/16".

FIRE RATED PIPE PENETRATION DETAIL

NTS

UL SYSTEM # W-L-1001 (F RATINGS - 1, 2, 3 AND 4 HOUR)

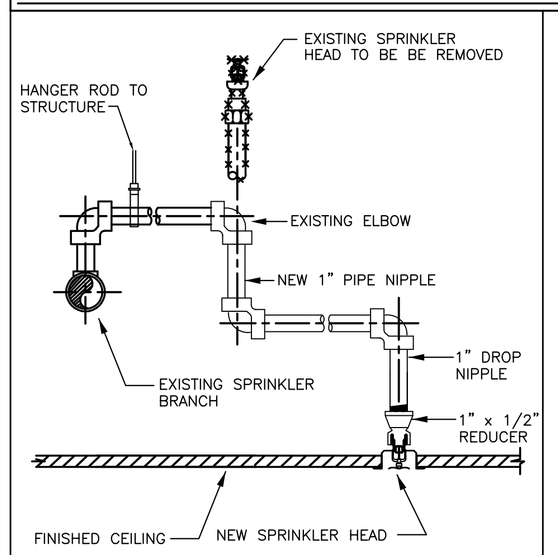

ARMOVER DETAIL

N.T.S.

1 FP-2 FIRE PROTECTION NOTES AND DETAILS

SCALE:N.T.S.

arpe engineering inc
Gables International Plaza
2655 Le Jeune Road, Suite 1109
Coral Gables, Florida 33134
Phone > 305 444 9809
Fax > 305 444 9827
Engineering Design:
> Mechanical > Electrical
> Plumbing > Fire Protection
www.arpe-eng.com
JOB # 16-0908
Amarilis Rodriguez, P.E.
License Number 60236
C.A. 26359
Signature
Date

CLIENT :

701 4th Street

Interior Renovations

701 4th Street
Miami Beach, FL 33139
Folio: 02-4203-009-3040

CDS
333 SE 2ND AVENUE, SUITE 2066
MIAMI, FL 33131
Tel: 786.218.5335
License #AA 26002467
WWW.CASTELLANOSDESIGN.COM

No.	DATE	ISSUED / REVISED

ALL DRAWN AND WRITTEN MATERIAL CONTAINED HEREIN IS THE SOLE PROPERTY OF CASTELLANOS DESIGN STUDIO, LLC. AND MAY NOT BE DUPLICATED, PUBLISHED, DISCLOSED OR USED WITHOUT EXPRESS WRITTEN CONSENT OF CASTELLANOS DESIGN STUDIO, LLC.
THE DRAWINGS ARE SCOPE DOCUMENTS WHICH INDICATE THE GENERAL SCOPE OF WORK, AND SUCH, DO NOT NECESSARILY DESCRIBE ALL WORK REQUIRED FOR THE FULL PERFORMANCE AND COMPLETION OF THE WORK. GENERAL CONTRACTOR IS TO FURNISH AND INSTALL ALL ITEMS REQUIRED FOR THE PROPER COMPLETION OF ITS WORK WITHOUT ADJUSTMENT TO THE CONTRACT AMOUNT UNLESS SCOPE OF WORK CHANGES FROM THAT INDICATED ON THE DRAWINGS. IN THE EVENT OF A CONFLICT WITHIN OR AMONG THE CONTRACT DOCUMENTS, THAT DOCUMENT PLACING THE GREATEST BURDEN UPON GENERAL CONTRACTOR SHALL GOVERN. THE GENERAL CONTRACTOR SHALL CAREFULLY STUDY AND COMPARE ALL DRAWINGS, REPORTING ANY ERROR, INCONSISTENCY OR OMISSION HE MAY DISCOVER AND REPORT TO CDS AND IN NO CASE SHALL PROCEED IN UNCERTAINTY.

SEAL :

WESLEY ART CASTELLANOS
FLORIDA ARCHITECT LICENSE AR 96133

PROJECT NO : 2016-17

FIRE PROTECTION NOTES AND DETAILS

CHECKED BY : A.R.
DRAWN BY : F.A.
SCALE: AS SHOWN

SHEET NO : FP–2

© 2016 BY CDS