Florida Product Approval

HardieSoffit® Panel

- For use inside HVHZ:
    - HardieSoffit Panel fastener types, fastening schedule, and installation shall be in accordance with the Miami-Dade County Florida NOA 07-0418.04. Consult the HardieSoffit product installation instructions on the follow pages for all other installation requirements.

- For use outside of HVHZ,
    - HardieSoffit Panel fastener types, fastening schedule, and installation shall be in accordance with Engineering Evaluation Report RIO-2301-11. Consult the HardieSoffit product installation instructions on the follow pages for all other installation requirements.

HardieSoffit® Panels

HZ10™

JamesHardie®

EFFECTIVE APRIL 2009

INSTALLATION REQUIREMENTS - PRIMED & COLORPLUS® PRODUCTS

Visit www.jameshardie.com for the most recent version.

IMPORTANT: FAILURE TO INSTALL AND FINISH THIS PRODUCT IN ACCORDANCE WITH APPLICABLE BUILDING CODES AND JAMES HARDIE WRITTEN APPLICATION INSTRUCTIONS MAY LEAD TO PERSONAL INJURY, AFFECT SYSTEM PERFORMANCE, VIOLATE LOCAL BUILDING CODES, AND VOID THE PRODUCT ONLY WARRANTY. BEFORE INSTALLATION, CONFIRM THAT YOU ARE USING THE CORRECT HARDIEZONE INSTRUCTIONS. INSTALLATION OF HZ10™ PRODUCTS OUTSIDE AN HZ10™ LOCATION WILL VOID YOUR WARRANTY. TO DETERMINE WHICH HARDIEZONE APPLIES TO YOUR LOCATION, VISIT WWW.HARDIEZONE.COM OR CALL 1-866-942-7343 (866 9HARDIE)

STORAGE & HANDLING:

Store flat and keep dry and covered prior to installation. Installing siding wet or saturated may result in shrinkage at butt joints. Carry planks on edge. Protect edges and corners from breakage. James Hardie is not responsible for damage caused by improper storage and handling of the product.

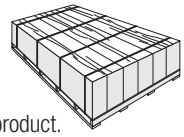

⚠ CUTTING INSTRUCTIONS

OUTDOORS
1. Position cutting station so that wind will blow dust away from user and others in working area.
2. Use one of the following methods:
   - a. Best: i. Score and snap; ii. Shears (manual, electric or pneumatic)
   - b. Better: i. Dust reducing circular saw equipped with a HardieBlade® saw blade and HEPA vacuum extraction
   - c. Good: i. Dust reducing circular saw with a HardieBlade saw blade (only use for low to moderate cutting)

INDOORS
1. Cut only using score and snap, or shears (manual, electric or pneumatic).
2. Position cutting station in well-ventilated area

- NEVER use a power saw indoors
- NEVER use a circular saw blade that does not carry the HardieBlade saw blade trademark
- NEVER dry sweep – Use wet suppression or HEPA Vacuum

Important Note: For maximum protection (lowest respirable dust production), James Hardie recommends always using "Best"-level cutting methods where feasible.

NIOSH-approved respirators can be used in conjunction with above cutting practices to further reduce dust exposures. Additional exposure information is available at www.jameshardie.com to help you determine the most appropriate cutting method for your job requirements. If concern still exists about exposure levels or you do not comply with the above practices, you should always consult a qualified industrial hygienist or contact James Hardie for further information.

SD083105

GENERAL REQUIREMENTS:

- HardieSoffit® panels may be installed over either steel or wood framing complying with the local building code. Install soffits to nominal 2 x 4 framing members spaced a maximum of 24 inches on center (fig.4),
- All edges must be supported by framing. (figs. 3 & 4)
- Install water barriers and air barriers as required by local building codes. James Hardie will assume no responsibility for moisture infiltration.
- Ensure gutters have end caps. Maintain a minimum 1" gap between end caps and siding & trim (fig.5).
- Install kickout flashing at roof-wall junctions. (fig 6.)
- DO NOT use stain on James Hardie® products.

INSTALLATION:

- HardieSoffit panels must be fastened to a solid, nailable substrate such as a wood 2x subfascia.
- Additional framing may be needed to ensure proper fastening.
- Soffits can be installed as shown in figure 1. Position the vent holes toward the outside of the eave for optimal airflow.
- 12" to 24" wide Vented HardieSoffit panels, provide 5.0 square inches of net free ventilation per lineal foot.
- Alternatively vents can be installed into non-vented soffit.
- If necessary, an insect screen can be installed using construction adhesive.
  Note: net free ventilation will be reduced.

Figure 1

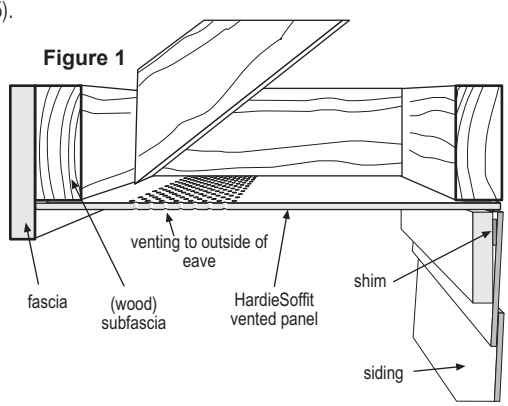

Fastener Requirements

- Position fasteners 3/8" from panel edges and no closer than 2" away from corners when using soffit greater than 12" wide (fig. 4) and no closer than 1" away from corners when using soffit that is less than or equal to 12" wide (fig. 3).

Jointing Methods

- Install panels in moderate contact at ends, provide PVC or metal jointers, battens or leave appropriate gap and caulk (fig 2).

Figure 2

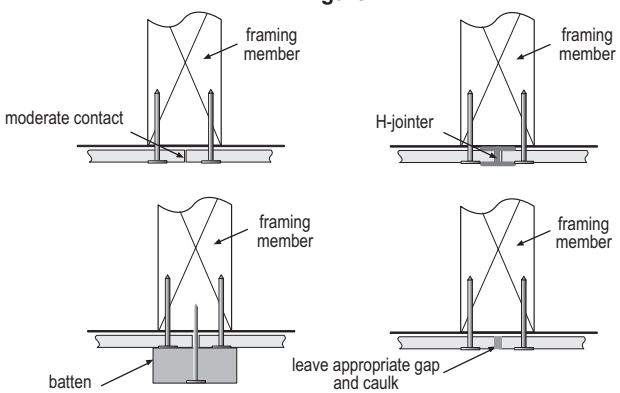

Figure 3

less than or equal to 12" Wide Soffit

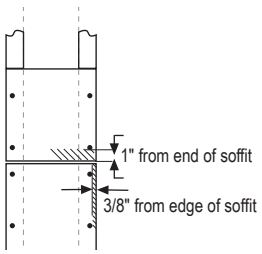

Figure 4

Greater than 12" Wide Soffit

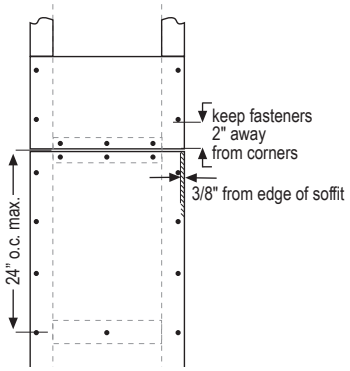

[1]For additional information on HardieWrap™ Weather Barrier, consult James Hardie at 1-866-4Hardie or www.hardiewrap.com

WARNING: AVOID BREATHING SILICA DUST

James Hardie® products contain respirable crystalline silica, which is known to the State of California to cause cancer and is considered by IARC and NIOSH to be a cause of cancer from some occupational sources. Breathing excessive amounts of respirable silica dust can also cause a disabling and potentially fatal lung disease called silicosis, and has been linked with other diseases. Some studies suggest smoking may increase these risks. During installation or handling: (1) work in outdoor areas with ample ventilation; (2) use fiber cement shears for cutting or, where not feasible, use a HardieBlade saw blade and dust-reducing circular saw attached to a HEPA vacuum; (3) warn others in the immediate area; (4) wear a properly-fitted, NIOSH-approved dust mask or respirator (e.g. N-95) in accordance with applicable government regulations and manufacturer instructions to further limit respirable silica exposures. During clean-up, use HEPA vacuums or wet cleanup methods - never dry sweep. For further information, refer to our installation instructions and Material Safety Data Sheet available at www.jameshardie.com or by calling 1-800-9HARDIE (1-800-942-7343). FAILURE TO ADHERE TO OUR WARNINGS, MSDS, AND INSTALLATION INSTRUCTIONS MAY LEAD TO SERIOUS PERSONAL INJURY OR DEATH.

SD050905

Maintain a minimum 1" gap between gutter end caps and siding & trim.

Figure 5

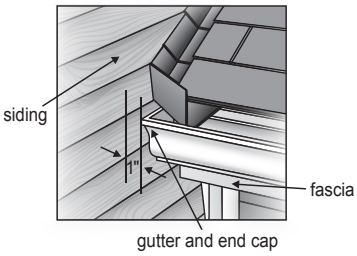

Figure 6

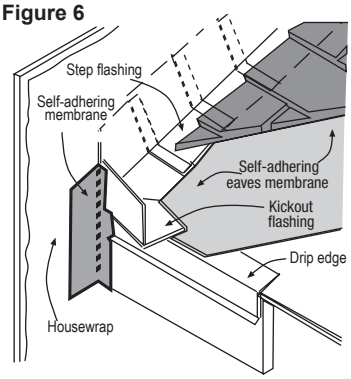

KICKOUT FLASHING

Because of the volume of water that can pour down a sloped roof, one of the most critical flashing details occurs where a roof intersects a sidewall. The roof must be flashed with step flashing. Where the roof terminates, install a kickout to deflect water away from the siding. It is best to install a self-adhering membrane on the wall before the subfascia and trim boards are nailed in place, and then come back to install the kickout.

Figure 6, Kickout Flashing‡ To prevent water from dumping behind the siding and the end of the roof intersection, install a "kickout" of sufficient length and angle to direct the water running down the roof away from the siding.

FASTENER REQUIREMENTS

- For wood frame construction a minimum 4d common nails spaced 8" o.c. at panel edges and intermediate framing members spaced up to 24" on center are suitable in most locations*.
- For conventional 20ga steel frame construction a minimum No. 8-18 x 0.323" HD x 1" long ribbed bugle screws spaced 6" o.c. at panel edges and intermediate framing members spaced up to 24" on center are suitable in most locations**.

**Minimum Basic Wind Speed differs by locality. Where specified levels of wind resistance are required, refer to applicable Building Code Compliance Reports.

GENERAL FASTENING REQUIREMENTS

Fasteners must be corrosion resistant, galvanized, or stainless steel. Electro-galvanized are acceptable but may exhibit premature corrosion. James Hardie recommends the use of quality, hot-dipped galvanized nails. James Hardie is not responsible for the corrosion resistance of fasteners. Stainless steel fasteners are recommended when installing James Hardie® products near the ocean, large bodies of water, or in very humid climates..

PNEUMATIC FASTENING

James Hardie products can be hand nailed or fastened with a pneumatic tool. Pneumatic fastening is highly recommended. Set air pressure so that the fastener is driven snug with the surface of the siding. A flush mount attachment on the pneumatic tool is recommended. This will help control the depth the nail is driven. If setting the nail depth proves difficult, choose a setting that under drives the nail. (Drive under driven nails snug with a smooth faced hammer - Does not apply for installation to steel framing).

- Consult applicable code compliance report for correct fasteners type and placement to achieve specified design wind loads.
- NOTE: Published wind loads may not be applicable to all areas where Local Building Codes have specific jurisdiction. Consult James Hardie Technical Services if you are unsure of applicable compliance documentation.
- Drive fasteners perpendicular to siding and framing.
- Fastener heads should fit snug against siding (no air space). (fig. A)
- Do not over-drive nail heads or drive nails at an angle.
- If nail is countersunk, caulk nail hole and add a nail. (fig. B)
- For wood framing, under driven nails should be hit flush to the plank with a hammer (For steel framing, remove and replace nail).
- **Do not use aluminum fasteners, staples, or clipped head nails.**

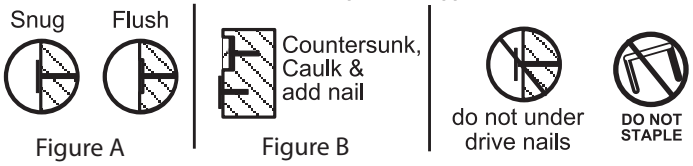

CAULKING

For best results use an Elastomeric Joint Sealant complying with ASTM C920 Grade NS, Class 25 or higher or a Latex Joint Sealant complying with ASTM C834. Caulking/Sealant must be applied in accordance with the caulking/sealant manufacturer's written instructions or ASTM C1193.

PAINTING

DO NOT use stain on James Hardie® products. James Hardie products must be painted within 180 days for primed product and 90 days for unprimed. 100% acrylic topcoats are recommended. Do not paint when wet. For application rates refer to paint manufacturers specifications. Back-rolling is recommended if the siding is sprayed.

COLORPLUS® TECHNOLOGY CAULKING, TOUCH-UP & LAMINATE

- Touch up nicks, scrapes and nail heads using the ColorPlus® Technology touch-up applicator. Touch-up paint should be used sparingly. If large areas require touch-up, replace the damaged area with new HardieSoffit® panel with ColorPlus Technology.
- Laminate sheet must be removed immediately after installation of each course.
- Terminate non-factory cut edges into trim where possible, and caulk. Color matched caulks are available from your ColorPlus dealer.
- Treat all other non-factory cut edges using the ColorPlus Technology edge coaters, available from your ColorPlus® product dealer.

PAINTING JAMES HARDIE® PRODUCTS WITH COLORPLUS® TECHNOLOGY

When repainting ColorPlus products, James Hardie recommends the following regarding surface preparation and topcoat application:

- Ensure the surface is clean, dry, and free of any dust, dirt, or mildew
- Repriming is normally not necessary
- 100% acrylic topcoats are recommended
- DO NOT use stain or oil/alkyd base paints on James Hardie® products
- Apply finish coat in accordance with paint manufacturers written instructions regarding coverage, application methods, and application temperature

* The illustration (figure 6) was reprinted with permission of THE JOURNAL OF LIGHT CONSTRUCTION. For subscription information, visit www.jlconline.com.

RECOGNITION: In accordance with ICC-ES Legacy Report NER-405, HardieSoffit panel is recognized as a suitable alternate to that specified in: the BOCA National Building Code/1999, the 1997 Standard Building Code, the 1997 Uniform Building Code, the 1998 International One- and Two-Family Dwelling Code, the 2003 International Building Code, and the 2003 International Residential Code for One-and Two-Family Dwellings. Hardiesoffit panel is also recognized for application in the following: City of Los Angeles Research Report No. 24862, State of Florida listing FL#889, Dade County, Florida NOA No. 02-0729.02, U.S. Dept. of HUD Materials Release 1263c, Texas Department of Insurance Product Evaluation EC-23, City of New York MEA 223-93-M, and California DSA PA-019. These documents should also be consulted for additional information concerning the suitability of this product for specific applications.

© 2009 James Hardie International Finance B.V. All rights reserved. TM, SM, and ® denote trademarks or registered trademarks of James Hardie International Finance B.V. is a registered trademark of James Hardie International Finance B.V.

Please visit www.jameshardie.com for Additional Product Information and Availability, Installation Information, Warnings, and Warranties

JamesHardie®