SPUTO AND LAMMERT ENGINEERING, LLC
STRUCTURAL ENGINEERS
10 SW 1ST AVENUE, GAINESVILLE, FL 32601
PHONE: 352-378-0448 FAX: 352-373-1331
E-MAIL: sputoandlammert@mindspring.com

PRODUCT EVALUATION REPORT

MANUFACTURER:

Varco Pruden Buildings, a Division of BlueScope Buildings North America, Inc.
3200 Players Club Circle
Memphis, TN 38125

SUBJECT:

Cold-formed steel roof panels

PRODUCT CATEGORY:

Structural Component: Roof Deck

PRODUCT DESCRIPTION:

Structural metal roof panel, applied over open framing.

1. Panel Rib (22, 24, and 26 gage only)
2. SSR (22 and 24 gage)

CODE CRITERIA:

Florida Building Code 2010:
Chapter 15: Roof Assemblies
1504.3
Chapter 22: Steel
2209.1

REFERENCE STANDARDS:

AISI S100	2007
UL 580	2006

BASIS OF EVALUATION:

Structural load carrying capacity is based on rational analysis through the application of the AISI-S100.

LIMITATIONS AND CONDITIONS OF USE FOR NON-HVHZ:

1. This compliance is not for HVHZ.
2. The panel is to be installed over steel framing in accordance with the load tables and UL 580 Constructions.
   - Panel Rib 64
   - SSR 113
3. The use of panels as a shear diaphragm is outside the scope of this product approval.
4. Minimum installed roof slope (SSR panel) is 0.25/12 per FBC 1507.4.2.3. Minimum installed roof slope (Panel Rib panel) is 0.50/12 with lap sealant per FBC 1507.4.2.2.
5. Impact resistance is not evaluated.

TECHNICAL DOCUMENTATION SUPPORTING COMPLIANCE STATEMENT:

1. Allowable Loading Table.
2. Installation drawings and details.
3. UL Assemblies.

CODE COMPLIANCE CERTIFICATION

As product evaluator, the undersigned certifies that the listed products are in compliance with the requirements of the 2010 Florida Building Code.

Sincerely,

SPUTO AND LAMMERT ENGINEERING, LLC



Thomas Sputo, Ph.D., P.E.
Florida PE 39142

DATE OF REPORT: 20 February 2012

PANEL MATERIAL:

G-90 Galvanized[1] coating over steel substrate with VP SP[2] or KXL[3] finishes
ASTM A653, SS Grade 50

Galvalume[4] coating over steel substrate with or without VP SP[2] or KXL[3] finishes
ASTM A792, SS Grade 50

PANEL GEOMETRY:

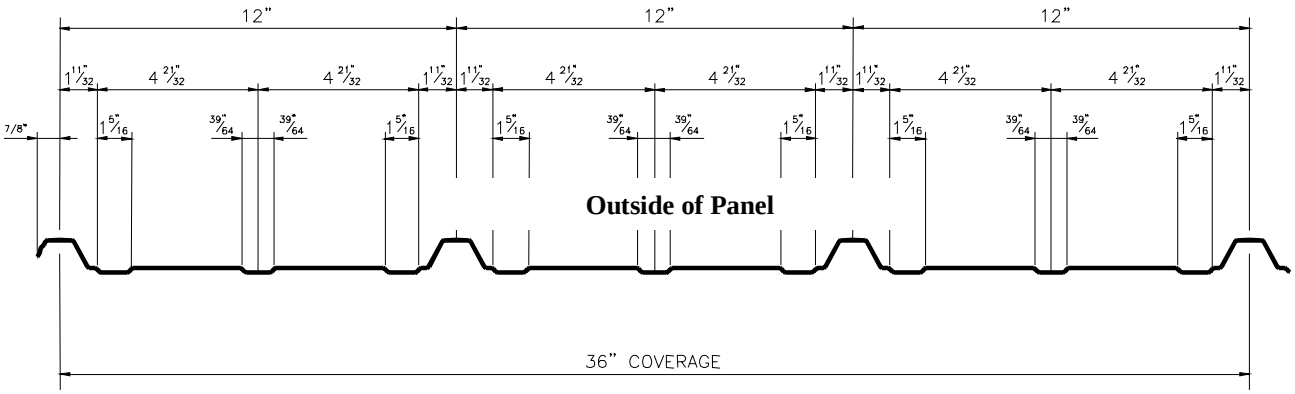

PANEL PROPERTIES:

Panel Properties per Foot Width of Panel						Effective Properties			
						Compression on Outside		Compression on Inside	
Panel Gage	Design Thickness	Weight (psf)	E (ksi)	Fy (ksi)	Fu (ksi)	Sx (in.3)	Ix (in.4)	Sx (in.3)	Ix (in.4)
26	0.0184	0.96	29500	50	60	0.0378	0.0337	0.0421	0.0293
24	0.0220	1.14	29500	50	60	0.0485	0.0423	0.0505	0.0363
22	0.0273	1.40	29500	50	60	0.0629	0.0547	0.0624	0.0460

NOTES:

1. Galvanized steel is a Zinc alloy coating per ASTM A653 over steel substrate. The G-90 coating thickness is approximately 0.0015 inches total *coating* for both sides.
2. SP is a Siliconized Polyester exterior paint finish over epoxy primer with an interior surface wash coat.
3. Galvalume steel is an Aluminum-Zinc alloy coating per ASTM A792 over steel substrate. A *minimum* galvalume coating designation of AZ50 (≈1.6 mil. coating thickness) is used with VP's SP and KXL finishes.
4. KXL is a 1.0 mil. 70% Kynar exterior finish over an epoxy primer with a 0.5 mil. interior surface wash coat. (total coating thickness = 1.5 mil.)
5. Section properties are per the 2007 AISI Specification.
6. Design base metal thickness is exclusive of Galvanized or Galvalume coatings and SP or KXL finishes.
7. Weights are based on Galvanized coated panel thickness (design base metal +0.0015 inches) using 490 lb/ft^3 and a material blank width of 42 ¾ inches.

PANEL DESIGN:

Panel Rib Wall Panels are designed in accordance with the 2007 AISI Specification. Panels are designed for Bending (AISI C3.1 & C3.1.1), Shear (AISI C3.2), Web Crippling (AISI C3.4) and Combined Bending and Shear (AISI C3.3). Note: Combined bending and web crippling is not a design limit state.

1. Panel Flexural Strength

Nominal Gage	Outside of Panel in Compression		Inside of Panel in Compression	
	Nominal Strength	Allowable Strength –ASD (k-in. per ft. width panel)	Nominal Strength	Allowable Strength –ASD (k-in. per ft. width panel)
26	1.890	1.132	2.105	1.260
24	2.425	1.452	2.525	1.512
22	3.143	1.882	3.122	1.869

Notes:

1. Tabulated values are for Allowable and Design Bending Strengths where:
   - Allowable Strength = M_n / Ω_b (ASD), kip-in.
   - Ω_b = 1.67 (ASD); ϕ_b = 0.95 (LRFD)
2. Nominal Bending Strength: $M_n = S_x F_y$, kip-in.
3. Load reductions or allowable stress increases for wind have not been included.

2. Panel Shear Strength

Nominal Gage	Nominal Strength (kips / ft. width panel)	Allowable Strength –ASD (kips / ft. width panel)
26	1.195	0.745
24	1.407	0.879
22	1.709	1.068

Notes:

1. Tabulated values are for Allowable and Design Shear Strengths where:
   - Allowable Strength = V_n / Ω_v (ASD), kips per ft. width of panel
   - Ω_v = 1.6 (ASD); ϕ_v = 0.95 (LRFD)
2. Nominal Shear Strength: V_n = per AISI C3.2, kips per ft. width of panel.
3. Load reductions or allowable stress increases for wind have not been included.

3. Panel Web Crippling Strength

Nominal Gage	End – One Flange Loading		Interior – One Flange Loading	
	Nominal Strength	Allowable Strength –ASD (kips / ft. width panel)	Nominal Strength	Allowable Strength –ASD (kips / ft. width panel)
26	0.337	0.198	0.585	0.334
24	0.464	0.273	0.814	0.465
22	0.682	0.401	1.212	0.692

Notes:

1. Tabulated values are for Allowable and Design Web Crippling Strengths where:
   - Allowable Strength = P_n / Ω_w (ASD), kips per ft. width of panel
   - End Loading: $\Omega_w = 1.7$ (ASD); $\phi_w = 0.90$ (LRFD)
   - Interior Loading: $\Omega_w = 1.75$ (ASD); $\phi_w = 0.85$ (LRFD)
2. Nominal Bending Strength: P_n = per AISI C3.4, kips per ft. width of panel.
3. Load reductions or allowable stress increases for wind have not been included.

4. Panel Connections

Panel-to-Secondary Support Connections are made with #12-14 self-drilling structural roof fasteners located one foot on center at each rib location. Additional fasteners may be required for higher suction loads. Connection strength is based on the smaller of screw pullover from the panel and pullout from the secondary support.

Pullover Strength

Screw Type	Screw Pullover from:	Nominal Strength (pounds / screw)	Allowable Strength (pounds / screw)
#12-14 – 1¼",1½ " HWH Structural Roof Stainless Steel Screw w/ 1/8" sealing washer	26 Ga. Panel (t_1 = 0.0184")	828	276
	24 Ga. Panel (t_1 = 0.0220")	990	330
	22 Ga. Panel (t_1 = 0.0273")	1229	410

Notes:

1. Tabulated values are for Allowable Screw Pullover Strengths where:
   - Allowable Strength = Pnov / Ω (ASD), pounds per screw
   - Ω = 3.00 (ASD)
2. Nominal Pullover Strength: P_{nov} = per AISI E4.4.2, pounds per screw assuming a washer diameter of 0.5".
3. Load reductions or allowable stress increases for wind have not been included.

Pullout Strength

Screw Type	Screw Pullout from Secondary	Nominal Strength (pounds / screw)	Allowable Strength (pounds / screw)
#12-14 – 1¼",1½ " HWH Structural Roof Stainless Steel Screw w/ 1/8" sealing washer	t = 0.060", Fu = 70 ksi	771	257
	t = 0.068", Fu = 70 ksi	874	291
	t = 0.073", Fu = 70 ksi	938	313
	t = 0.079", Fu = 70 ksi	1015	338
	t = 0.088", Fu = 70 ksi	1131	377
	t = 0.098", Fu = 70 ksi	1259	420
	t = 0.113", Fu = 70 ksi	1452	484

Notes:

4. Tabulated values are for Allowable Screw Pullout Strengths where:
   - Allowable Strength = Pnot / Ω (ASD), pounds per screw
   - Ω = 3.00 (ASD)
5. Nominal Pullout Strength: P_{not} = per AISI E4.4.1, pounds per screw.
6. Load reductions or allowable stress increases for wind have not been included.

5. Panel Deflections

Panel deflections are determined utilizing Moments of Inertia determined for strength for outside of panel in compression and inside of panel in compression. This is slightly conservative over the prescribed moment of Inertia which is evaluated at f = design stress.

PANEL LOAD TABLES:

Panel Rib Wall Panel		Allowable Uniform Load (psf)													
		Span = 2.0'		Span = 2.5		Span = 3.0'		Span = 3.5		Span = 4.0		Span = 4.5		Span = 5.0'	
Gage	F_y	P	S	P	S	P	S	P	S	P	S	P	S	P	S
26 Ga.	50	146	207	117	135	97	95	78	70	60	54	48	43	39	35
24 Ga.	50	203	263	163	173	126	122	94	90	72	69	57	55	46	45
22 Ga.	50	303	338	221	222	156	157	116	116	89	90	71	71	57	58

Notes:

1. P = Pressure on outside of panel, S = suction on outside of face.
2. Tabulated values are for allowable loads designed in accordance with the 2007 AISI Specification considering bending, shear, web crippling, combined bending and shear and fastener pullover from panel.
3. Panel allowable loads are limited by L/60 deflection.
4. UL 90 construction assumed with (2) fasteners per foot at intermediate supports, (3) fasteners per foot at eave and ridge.
5. All values shown are for 3 or more spans.
6. Fastener pullover strength is included in load tables. For fastener pullout strength from secondary refer to Section 4.

PANEL MATERIAL:

Galvalume[2] coating over steel substrate with or without VP SP[1] or KXL[3] finishes **ASTM A792**, SS Grade 50

PANEL GEOMETRY:

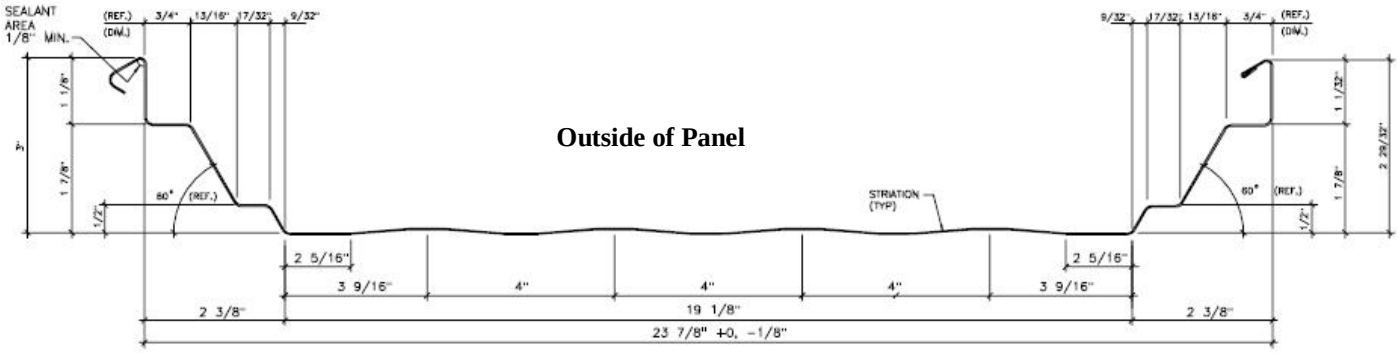

PANEL PROPERTIES:

Panel Properties per Foot Width of Panel						Effective Properties			
						Compression on Outside		Compression on Inside	
Panel Gage	**Design Thickness**	**Weight (psf)**	**E (ksi)**	**Fy (ksi)**	**Fu (ksi)**	**Sx (in.3)**	**Ix (in.4)**	**Sx (in.3)**	**Ix (in.4)**
24	0.0220	1.13	29500	50	60	0.1049	0.2465	0.0712	0.1065
22	0.0273	1.21	29500	50	60	0.1290	0.3015	0.0896	0.1370

NOTES:
1. SP is a Siliconized Polyester exterior paint finish over epoxy primer with an interior surface wash coat.
2. Galvalume steel is an Aluminum-Zinc alloy coating per ASTM A792 over steel substrate. A *minimum* galvalume coating designation of AZ50 (≈1.6 mil. coating thickness) is used with VP's SP and KXL finishes.
3. KXL is a 1.0 mil. 70% Kynar exterior finish over an epoxy primer with a 0.5 mil. interior surface wash coat. (total coating thickness = 1.5 mil.)
4. Section properties are per the 2007 AISI Specification.
5. Design base metal thickness is exclusive of Galvanized or Galvalume coatings and SP or KXL finishes.
6. Weights are based on Galvalume coated panel thickness (design base metal +0.0018 inches) using 490 lb/ft^3 and a material blank width of 29-11/16 inches.

PANEL DESIGN:

Panel Rib Wall Panels are designed in accordance with the 2007 AISI Specification. Panels are designed for Bending (AISI C3.1 & C3.1.1), Shear (AISI C3.2), Web Crippling (AISI C3.4) and Combined Bending and Shear (AISI C3.3). Note: Combined bending and web crippling is not a design limit state.

1. Panel Flexural Strength

Nominal Gage	Outside of Panel in Compression		Inside of Panel in Compression	
	Nominal Strength	Allowable Strength –ASD (k-in. per ft. width panel)	Nominal Strength	Allowable Strength –ASD (k-in. per ft. width panel)
24	5.245	3.141	3.558	2.130
22	6.450	3.862	4.478	2.681

Notes:
1. Tabulated values are for Allowable and Design Bending Strengths where:
   - Allowable Strength = M_n / Ω_b (ASD), kip-in.
   - Ω_b = 1.67 (ASD)
   - Nominal Bending Strength: $M_n = S_x F_y$, kip-in.
2. Load reductions or allowable stress increases for wind have not been included.

1A. Uplift Strength

In accordance with AISI Section C3.1.5, standing seam roof panel systems under uplift loadings the nominal strength (resistance) shall be determined by testing per AISI test procedure TS-6 (ASTM E1592). Panel strength under gravity loading may be determined by AISI Sections B and C as referenced above.

Panel System	Nominal Strength, W_n (psf)	Factor of Safety, Ω
24 or 22 Ga. SSR w/ Std. Clip [4]	W_n =17.33 + 242.67 / Sc	Ω = 1.73
24 or 22 Ga. SSR w/ Seam Clamp [4]	W_n = 5.63 + 416.00 / Sc	Ω = 1.74

Notes:
1. Tabulated values are for Allowable Strengths where:
   - Allowable Strength = W_n / Ω_v (ASD), kips per ft. width of panel
   - Sc = SSR clip spacing, ft.
2. Nominal Strength (Resistance) determined in accordance AISI Test Procedure TS-6 "Standard Procedures for Panel and Anchor Structural Tests." References: Computerized Structural Design Test Report No. 970152 "Report on Standing Seam Roof (SSR) Uplift Capacity", July 10, 1998
3. Load reductions or strength (resistance) increases for wind have not been included.
4. Standard clip connection requires (2) ¼ -14 fasterers per clip. Connections with seam clamp require (3) fasteners. See Section 4.

2. Panel Shear Strength

Nominal Gage	Nominal Strength (kips / ft. width panel)	Allowable Strength –ASD (kips / ft. width panel)
24	1.392	0.870
22	1.887	1.179

Notes:
1. Tabulated values are for Allowable and Design Shear Strengths where:
   - Allowable Strength = V_n / Ω_v (ASD), kips per ft. width of panel
   - Ω_v = 1.6 (ASD); ϕ_v = 0.95 (LRFD)
2. Nominal Shear Strength: V_n = per AISI C3.2, kips per ft. width of panel.
3. Load reductions or allowable stress increases for wind have not been included.

3. Panel Web Crippling Strength

Nominal Gage	End – One Flange Loading		Interior – One Flange Loading	
	Nominal Strength	Allowable Strength –ASD (kips / ft. width panel)	Nominal Strength	Allowable Strength –ASD (kips / ft. width panel)
24	0.405	0.165	0.784	0.448
22	0.601	0.245	1.182	0.675

Notes:
1. Tabulated values are for Allowable and Design Web Crippling Strengths where:
   - Allowable Strength = P_n / Ω_w (ASD), kips per ft. width of panel
   - End Loading: Ω_w = 2.45 (ASD) – unfastened support condition
   - Interior Loading: Ω_w = 1.75 (ASD) – unfastened support condition
2. Nominal Strength: P_n = per AISI C3.4, kips per ft. width of panel.
3. Load reductions or allowable stress increases for wind have not been included.

4. Panel Connections

Panel-to-Secondary support connections are made with VP's SSR Clips which have been included in the panel sidelap mechanically seamed joint. Standard clip connections to the secondary support members are made with (2) ¼ - 14 HWH self-drilling structural carbon fasteners. Connections with seam clamps require (3) fasteners. Connection strength is based on fastener pullout strength from the secondary support.

Pullout Strength

Screw Type	Screw Pullout from Secondary	Nominal Strength (pounds / screw)	Allowable Strength (pounds / screw)
#1/4-14 self-drilling structural fastener	t = 0.060", Fu = 70 ksi	893	298
	t = 0.068", Fu = 70 ksi	1012	337
	t = 0.073", Fu = 70 ksi	1086	362
	t = 0.079", Fu = 70 ksi	1175	392
	t = 0.088", Fu = 70 ksi	1309	436
	t = 0.098", Fu = 70 ksi	1458	486
	t = 0.113", Fu = 70 ksi	1681	560

Notes:

1. Tabulated values are for Allowable Screw Pullout Strengths where:
   - Allowable Strength = Pnot / Ω (ASD), pounds per screw
   - Ω = 3.00 (ASD)
2. Nominal Pullout Strength: P_{not} = per AISI E4.4.1, pounds per screw.
3. Load reductions or allowable stress increases for wind have not been included.

4A. SSR Seam Reinforcement Clamps

SSR clip reinforcement clamps are used to increase the panel uplift capacity by strengthening the SSR clip-to-Panel seam connection. Reinforcement clamps are used to increase the panel capacity at high wind suction load areas at corners, rakes and eaves.

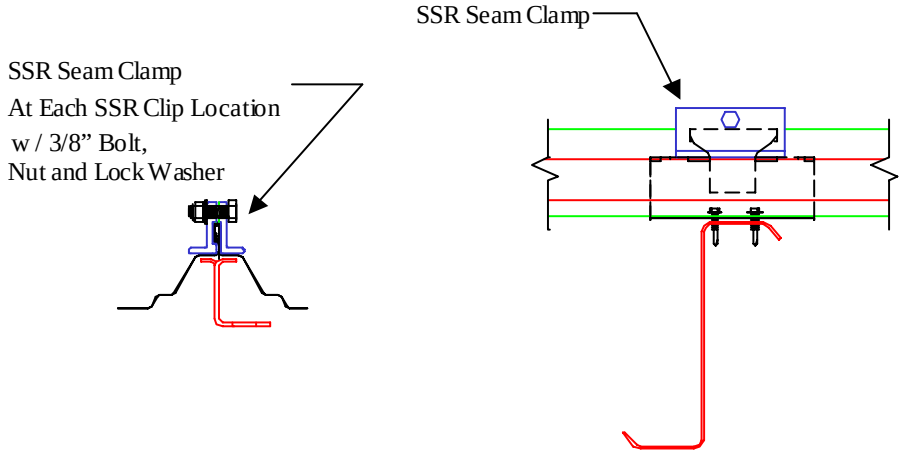

5. Panel Deflections

Panel deflections are determined utilizing Moments of Inertia determined for strength for outside of panel in compression and inside of panel in compression. This is slightly conservative over the prescribed moment of Inertia which is evaluated at f = design stress.

PANEL LOAD TABLES:

SSR Roof w/ Std. Clip Connection		Allowable Uniform Load (psf)													
		Span = 2.0'		Span = 2.5		Span = 3.0'		Span = 3.5		Span = 4.0		Span = 4.5		Span = 5.0'	
Gage	F_y	P	S	P	S	P	S	P	S	P	S	P	S	P	S
24 Ga.	50	196	66	157	66	131	57	112	50	98	45	79	41	65	38
22 Ga.	50	295	66	236	66	197	57	163	50	126	45	100	41	82	38

SSR Roof w/ Seam Clamp		Allowable Uniform Load (psf)													
		Span = 2.0'		Span = 2.5		Span = 3.0'		Span = 3.5		Span = 4.0		Span = 4.5		Span = 5.0'	
Gage	F_y	P	S	P	S	P	S	P	S	P	S	P	S	P	S
24 Ga.	50	196	*99*	157	*99*	131	*83*	112	*72*	98	*63*	79	*56*	65	*51*
22 Ga.	50	295	*99*	236	*99*	197	*83*	163	*72*	126	*63*	100	*56*	82	*51*

Notes:

1. P = Pressure on outside of panel, S = Suction on outside of face.
2. Tabulated values are for allowable loads designed in accordance with the 2007 AISI Specification considering bending, shear, web crippling, combined bending and shear.
3. Allowable loads for suction are based on ASTM E1592 tests. See Section 1A
4. Panel allowable loads are limited by L/60 deflection.
5. Standard clip to secondary connection requires (2) ¼-14 structural fasteners. Clip connection with Seam Clamp requires (3) ¼-14 structural fasteners.
6. All values shown are for 3 or more spans.
7. Fastener pullout strength from secondary evaluated per Section 4.

ONLINE CERTIFICATIONS DIRECTORY

Construction No. 64
TGKX.64
Roof Deck Constructions

Page Bottom

Design/System/Construction/Assembly Usage Disclaimer

- Authorities Having Jurisdiction should be consulted in all cases as to the particular requirements covering the installation and use of UL Listed or Classified products, equipment, system, devices, and materials.
- Authorities Having Jurisdiction should be consulted before construction.
- Fire resistance assemblies and products are developed by the design submitter and have been investigated by UL for compliance with applicable requirements. The published information cannot always address every construction nuance encountered in the field.
- When field issues arise, it is recommended the first contact for assistance be the technical service staff provided by the product manufacturer noted for the design. Users of fire resistance assemblies are advised to consult the general Guide Information for each product category and each group of assemblies. The Guide Information includes specifics concerning alternate materials and alternate methods of construction.
- Only products which bear UL's Mark are considered as Classified, Listed, or Recognized.

Roof Deck Constructions

See General Information for Roof Deck Constructions

Construction No. 64

October 30, 2009

Uplift — Class 90

Fire Not Investigated

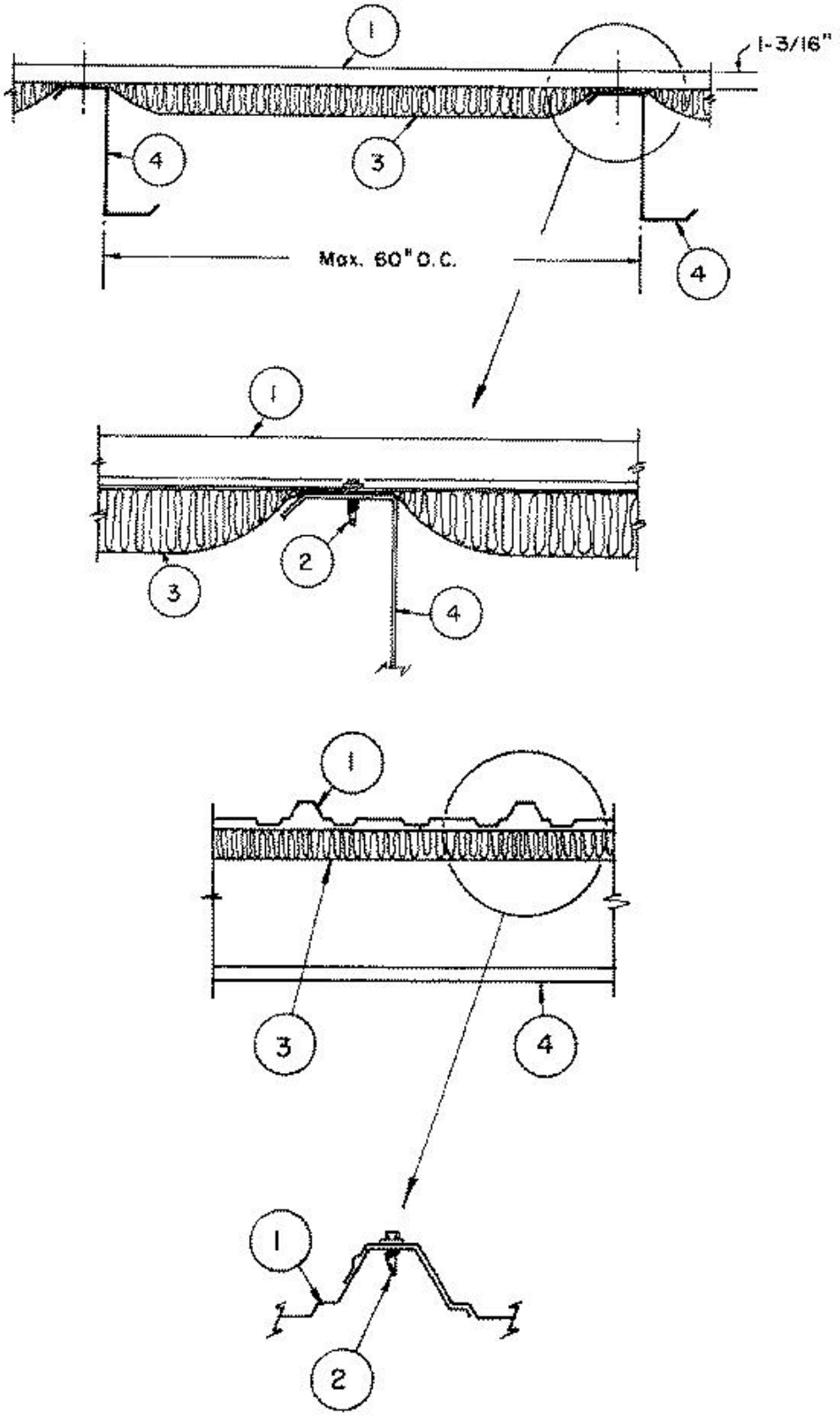
1
1-3/16"
4
3
Max. 60" O.C.
4
1
2
3
4
1
3
4
1
2

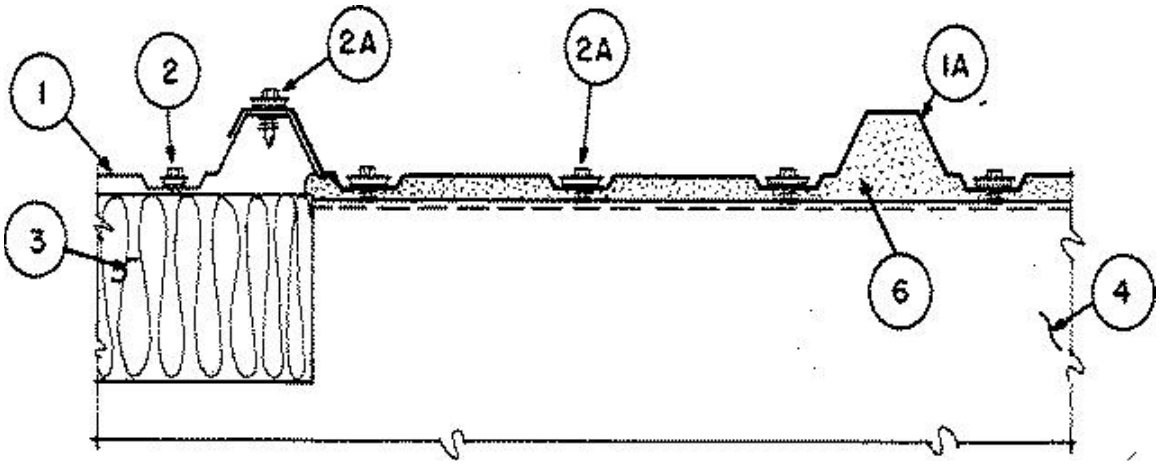

1. **Metal Roof Deck Panels* —** No. 26 MSG min gauge coated steel. Panels continuous over two or more spans. End laps to occur over purlins with panels overlapped 4 in. with lap beginning 1 in. from purlin web and extending across purlin flange. A bead of sealant may be used at panel end and side laps.

LIBERTY BLDG SYSTEMS, DIV OF

BLUESCOPE BUILDINGS NORTH AMERICA INC (View Classification) — "LibertyRib II".

VARCO PRUDEN BUILDINGS, DIV OF

BLUESCOPE BUILDINGS NORTH AMERICA INC (View Classification) — "Panel Rib".

1A. **Building Units —** * Translucent, glass fiber reinforced plastic panels with or without attached translucent condensation pans. Units formed to the same configuration as the metal (Panel Rib) panels. Panels continuous over two spans, total length to be 10 ft, 4 in.

LIBERTY BLDG SYSTEMS, DIV OF

BLUESCOPE BUILDINGS NORTH AMERICA INC (View Classification) — "LibertRib II Tuf- Lite".

VARCO PRUDEN BUILDINGS, DIV OF

BLUESCOPE BUILDINGS NORTH AMERICA INC (View Classification) — "Panel Rib Tuf-Lite".

2. **Panel Fasteners —** For panel to purlin connections to be No. 12-14 self-drilling, self-tapping, hex-head, plated steel screws with a 5/8 in. OD steel washer and a bonded neoprene sealing washer.

Length to be 1 in. when 3 in. max thickness is used and 1-1/4 in. when insulation thicker than 3 in. is used.

Spacing to be in a 4-8-4-8 in. pattern located 2 in. from the center line on both sides of each major rib. Spacing at end laps to be 4 in. OC with fasteners located 2 in. from the center line on both sides of each major rib.

Fasteners for panel to panel connections to be No. 14-14 by 3/4 in. self-tapping, hex-head, plated steel screws with a 5/8 in. OD steel washer and a bonded neoprene sealing washer.

Spacing to be 30 in. OC.

2A. **Translucent Panel Fasteners —** For plastic panel to purlin connection to be No. 12-14 by 1 in. self-drilling, self-tapping, hex-head, plated steel screws with a separate 3/8 in. OD steel washer and a bonded neoprene sealing washer. Spacing to be 4 in. on center located 2 in. from the center line on both sides of each major rib and centered between major ribs. Downslope endlap fasteners and spacing to be same. Upslope endlap fasteners and spacing to be same as shown for metal panel endlaps in Item 2 above. Length to be same as for metal panel to purlin connections. Fasteners for panel to panel connections to be 1/4-14 by 3/4 in. self-drilling, self-tapping, hex-head, plated steel screws with a separate 7/8 in. OD steel washer and bonded neoprene sealing washer. Spacing to be 10 in. OC with a fastener located at the endlaps.

3. **Insulation (Optional) —** Any compressible blanket insulation, 6 in. max thickness before compression.

4. **Purlin —** No. 16 MSG min gauge steel (50,000 psi min yield strength).

5. **Lateral Bracing —** (Not shown) — As required.

6. **Isolation Spacer —** Located between translucent panel and uninsulated purlin with panel to purlin fasteners passing through spacer.

Refer to General Information, Roof Deck Construction (Roofing Materials and Systems Directory) for Items not evaluated.

*Bearing the UL Classification Mark

Last Updated on 2009-10-30

Questions? Print this page Notice of Disclaimer Page Top

© 2012 UL LLC

The appearance of a company's name or product in this database does not in itself assure that products so identified have been manufactured under UL's Follow-Up Service. Only those products bearing the UL Mark should be considered to be Listed and covered under UL's Follow-Up Service. Always look for the Mark on the product.

UL permits the reproduction of the material contained in the Online Certification Directory subject to the following conditions: 1. The Guide Information, Designs and/or Listings (files) must be presented in their entirety and in a non-misleading manner, without any manipulation of the data (or drawings). 2. The statement "Reprinted from the Online Certifications Directory with permission from UL" must appear adjacent to the extracted material. In addition, the reprinted material must include a copyright notice in the following format: "© 2012 UL LLC".

ONLINE CERTIFICATIONS DIRECTORY

Construction No. 113
TGKX.113
Roof Deck Constructions

Page Bottom

Design/System/Construction/Assembly Usage Disclaimer

- Authorities Having Jurisdiction should be consulted in all cases as to the particular requirements covering the installation and use of UL Listed or Classified products, equipment, system, devices, and materials.
- Authorities Having Jurisdiction should be consulted before construction.
- Fire resistance assemblies and products are developed by the design submitter and have been investigated by UL for compliance with applicable requirements. The published information cannot always address every construction nuance encountered in the field.
- When field issues arise, it is recommended the first contact for assistance be the technical service staff provided by the product manufacturer noted for the design. Users of fire resistance assemblies are advised to consult the general Guide Information for each product category and each group of assemblies. The Guide Information includes specifics concerning alternate materials and alternate methods of construction.
- Only products which bear UL's Mark are considered as Classified, Listed, or Recognized.

Roof Deck Constructions

See General Information for Roof Deck Constructions

Construction No. 113

September 30, 2010

Uplift — Class 90

Fire Not Investigated

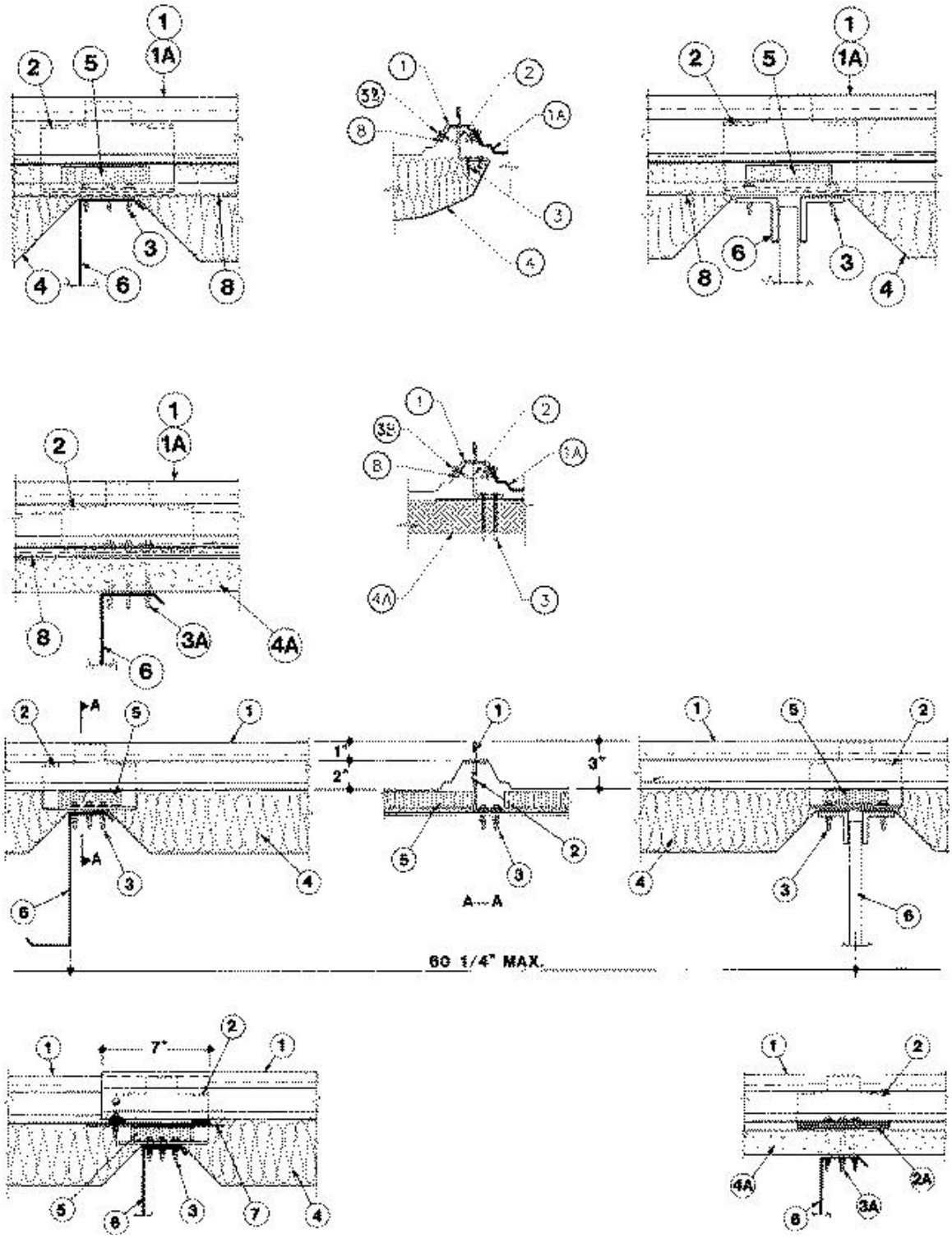

1. **Metal Roof Deck Panels* —** No. 24 min gauge coated steel; width 24 in., max height 3 in. at ribs. A splice plate assembly (Item 7) shall be used at all end laps. Panels continuous over two or more spans. Endlaps to occur over purlins with panels overlapped 7 in. when laps are not staggered and 4 in. when laps are staggered. Panels not to be attached to purlins at end laps. A bead of sealant may be used at panel side joints and endlaps.

VARCO PRUDEN BUILDINGS, DIV OF

BLUESCOPE BUILDINGS NORTH AMERICA INC (View Classification) — SSR panel.

1A. **Building Units* —** (Optional) — Translucent, glass fiber reinforced plastic panel assemblies with or without attached

translucent condensation pans (same basic configuration as the metal SSR panels). Assemblies continuous over two spans; panel length to be 10 ft, 7 in. when laps are not staggered and 10 ft, 4 in. when laps are staggered. To be used with Item 8. Panel clips (Item 2) spaced a max of 5 ft 0 in. at both sides of building unit.

VARCO PRUDEN BUILDINGS, DIV OF

BLUESCOPE BUILDINGS NORTH AMERICA INC (View Classification) — SSR Tuf-Lite.

2. **Roof Deck Fasteners* —** (Panel Clips) — Two part assembly, a base and an upper tab. Nom height to be 2-3/8 in. max when no thermal block (Item 5) is used and 3-1/8 in. when thermal block is used. Width to be 6 in. Located at side seams of panels and fastened to each purlin with screws (Item 3).

VARCO PRUDEN BUILDINGS, DIV OF

BLUESCOPE BUILDINGS NORTH AMERICA INC (View Classification) — SSR Panel Clip.

2A. **Panel Clip Bearing Plates —** Used over rigid insulation — No. 16 MSG min gauge coated steel. Nom width to be 4 in., nominal length to be 6 in. To be used with Items 2, 3A and 4A.

3. **Panel Clip Fasteners with Blanket Insulation —** (Screws) — Used to attach panel clips (Item 2) to cold-rolled steel purlins (Item 6), when compressible blanket insulation (Item 4) is used, to be No. 1/4-14 by 1-1/4 in. min length, hex washer head, self-drilling, self-tapping plated steel screws. Two No. 1/4-14 screws to be used with each clip.

Alternate fasteners, used to attach panel clips (Item 2) to open web joists (Item 6) having a 1/8 in. min upper chord thickness, when compressible blanket insulation (Item 4) is used, to be No. 12-24 hex washer head, self-drilling, self-tapping plated steel screws. Fastener length to vary with joist upper chord thickness with a min penetration into joist of 3/4 in. Two No. 12-24 screws to be used with each clip.

3A. **Panel Clip Fasteners with Rigid Insulation —** Screws — Used to attach panel clips (Item 2) with bearing plates (Item 2A), to cold-rolled purlins (Item 6), over rigid insulation (Item 4A) having a max thickness of 2-1/2 in., to be No. 1/4-14 hex washer head, self-drilling, self-tapping plated steel screws. Two No. 1/4-14 screws to be used with each clip. Fastener length to vary with thickness of rigid insulation with a min penetration into purlin of 3/4 in.

Alternate fasteners, used to attach panel clips (Item 2) to open web joists (Item 6) having a 1/8 in min upper chord thickness, when rigid insulation (Item 4A) having a max thickness of 2-1/2 in. is used, to be No. 12-24 hex washer head, self-drilling, self-tapping plated steel screws or No. 1/4-14 type AB or B, self-tapping plated steel screws. Type AB or B fastener pilot holes to be sized to thickness of steel accepting screws. Fastener length to vary with joist upper chord thickness with a min penetration into joist of 3/4 in. Two No 12-24 or two 1/4-14 screws to be used with each clip.

Fasteners used with rigid insulation having a thickness greater than 2-1/2 in. to be No. 1/4-14 type AB or B, self-tapping plated steel screws. Type AB or B fastener pilot holes to be sized to thickness of steel accepting screws. Fastener length to vary with joist upper chord thickness with a min penetration into joist of 3/4 in. Three No. 1/4-14 screws to be used with each clip.

3B. **Fasteners (Screws) —** Used at sides of building units to attach unit to adjacent panels to be No. 12-14 by 1 in. min self-drilling, self-tapping, hex head plated steel screws with a 5/8 in. O.D. steel washer and a neoprene sealing washer spaced 12 in. O.C.

3C. **End Lap Fasteners —** (Screws) — Fasteners used at the end lap to be No. 1/4-14 by 1-1/8 in. long self-drilling, self-tapping, hex head, plated steel screws with a nom 5/8 in. O.D. steel and neoprene sealing washer. Spacing to be 4-3/8 in. O.C. in the flat area of the panel beginning 3 in. from centerline of the major rib and located 1 in. from the exposed edge of the end lap. One fastener is located in the shoulder of each side of the major rib, located 1 in. from the exposed edge of the end lap. Seven fasteners total used at each end lap. All fasteners to be driven into splice plate assembly (Item 7).

4. **Insulation —** (Optional) — Any compressible blanket type insulation. A total of 6 in. max thickness before compression may be used.

4A. **Foamed Plastic* —** (Insulation) — (Optional) — Rigid type, supplied in 4 ft wide sheets. Min thickness 1-1/4 in. max thickness 3 1/2 in. Butt joints, staggered, to occur over purlins. Top surface of all joints may be continuously sealed with a 2 in. wide pressure sensitive vapor barrier tape.

THE DOW CHEMICAL CO (View Classification) — Types Thermax Sheathing, Thermax Light Duty Insulation, Thermax Heavy Duty Insulation, Thermax Metal Building Board, Thermax White Finish Insulation, Thermax ci Exterior Insulation, Thermax IH Insulation, Type Thermax Plus Liner Panel and Thermax Heavy Duty Plus (HDP)

5. **Thermal Block —** (Optional) — Used over purlins. 4 by 22 3/4 in. by 3/4 in. thick polystyrene (not used with rigid insulation).

6. **Purlin —** No. 16 MSG min gauge steel (50,000 psi min yield strength) or Type H or J open web steel joists.

7. **Splice Plate Assembly —** Used at panel end laps, min 9 in. long by nom 24 in. wide. for non-staggered end laps; min 13 in. long by 24 in. wide for staggered end laps. Formed to general profile of panel. Fabricated from No. 18 MSG thick coated steel having a min yield strength of 33,000 psi.

8. **Building Unit Side Support —** Channel shaped with a 1-5/16 in. horizontal flange and two 1 in. vertical legs at 120 degrees. Fabricated from No. 16 MSG steel having a min yield strength of 33,000 psi. Side support to be an integral part of building unit (Item 2).

Refer to General Information, Roof Deck Constructions, (Roofing Materials and Systems Directory) for items not evaluated.

*Bearing the UL Classification Mark

Last Updated on 2010-09-30

Questions? Print this page Notice of Disclaimer Page Top

© 2012 UL LLC

The appearance of a company's name or product in this database does not in itself assure that products so identified have been manufactured under UL's Follow-Up Service. Only those products bearing the UL Mark should be considered to be Listed and covered under UL's Follow-Up Service. Always look for the Mark on the product.

UL permits the reproduction of the material contained in the Online Certification Directory subject to the following conditions: 1. The Guide Information, Designs and/or Listings (files) must be presented in their entirety and in a non-misleading manner, without any manipulation of the data (or drawings). 2. The statement "Reprinted from the Online Certifications Directory with permission from UL" must appear adjacent to the extracted material. In addition, the reprinted material must include a copyright notice in the following format: "© 2012 UL LLC".