1 Hour Fire-Rated Construction	Non-Loadbearing				
wt. 6	• 5/8" Sheetrock Firecode Core gypsum panels, or 5/8" Sheetrock UltraLight Firecode X panels or 5/8" Firerock panels – 3-1/2" 25 gauge steel studs 24" o.c. – optional insulation – optional RC-1 channel	UL Des U419	40	**USG-860808** Based on 5/8" Sheetrock Firecode Core panels	A-2
			48	**RAL-TL-11-068** Based on 5/8" Sheetrock Firecode Core panels or 5/8" Sheetrock UltraLight Firecode X panels, R-11 fiberglass sound bat	
			49	**SA-870-717** Based on 5/8" Sheetrock Firecode Core panels, 3" mineral fiber insulation	
			52	**RAL-TL-11-071** Based on 5/8" Sheetrock UltraLight Firecode X panels, R-11 fiberglass sound bat, RC-1 channel	
			53	**RAL-TL-11-076** Based on 5/8" Sheetrock Firecode panels, R-11 fiberglass sound bat, RC-1 channel	
			54	**RAL-TL-11-076** Based on 5/8" Sheetrock Firecode panels, 3" mineral fiber insulation, RC-1 channel	
			52	**STC-120310** Based on 5/8" Sheetrock Firecode panels, 4" 20 gauge steel studs 12" o.c., 3" mineral wool insulation, RC-1 channel	
			52	**STC-120306** Based on 5/8" Sheetrock Firecode panels, 4" 20 gauge steel studs 16" o.c., 3-1/2" glass fiber insulation, RC-1 channel	
			54	**STC-120307** Based on 5/8" Sheetrock Firecode panels, 4" 20 gauge steel studs 16" o.c., 4" mineral wool insulation, RC-1 channel	
			53	**STC-120308** Based on 5/8" Sheetrock Firecode panels, 4" 20 gauge steel studs 16" o.c., 3" mineral wool insulation, RC-1 channel	

9 USG Fire-Resistant Assemblies

1 TYPICAL STEEL FIRE RATED PARTITION - UL419

SCALE : N.T.S

B Floor/Ceilings

Wood Framed

1 Hour Fire-Rated Construction	Dimensional Lumber		Acoustical Performance			Reference
Construction Detail	Description	Test Number	STC	IIC	Test Number	Index
clg. wt. 3 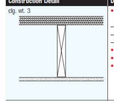	• 5/8" Sheetrock Firecode Core gypsum panels, ceiling – 1" nominal wood sub and finished floor – 2 x 10 wood joist 16" o.c. – joists finished • optional Lovejoy floor underlayment • optional SIM-25 or SRB sound mat • optional veneer plaster	UL Des L501	38	32	**CK-6412-7** Based on 1-1/4" nominal wood floor	B-52
			39	56	**CK-6412-8** Based on 1-1/4" nominal wood floor, 44 oz carpet and 40 oz pad atop flooring	

2 TYPICAL WOOD FRAME FLOOR-CEILING ASSEMBLY - L501

SCALE : N.T.S

System No. C-AJ-2631

F Rating — 2 Hr
T Rating — 1 Hr

CAJ 2631

Classified by Underwriters Laboratories, Inc. to UL 1479

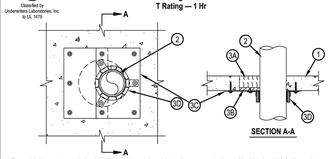

SECTION A-A

1. Floor or Wall Assembly — Min 2-1/2 in. (64 mm) thick reinforced lightweight or normal weight (100-150 pcf or 1600-2400 kg/m3) concrete. Wall may also be constructed of any UL Classified Concrete Blocks*. Max diam of opening is 8 in. (203 mm).
See Concrete Blocks (CAZT) category in the Fire Resistance Directory for names of manufacturers.
2. Through Penetrants — One nonmetallic pipe to be installed either concentrically or eccentrically within the firestop system. The annular space between pipe and opening shall be min 0 in. (point contact) to max 3-1/2 in. (89 mm). Pipe to be rigidly supported on both sides of floor or wall assembly. The following types and sizes of nonmetallic pipes may be used:
A. Polyvinyl Chloride (PVC) Pipe — Nom. 4 in. (102 mm) diam (or smaller) Schedule 40 solid-core or cellular core PVC pipe for use in closed (process or supply) or vented (drain, waste or vent) piping system.
B. Chlorinated Polyvinyl Chloride (CPVC) Pipe — Nom 4 in. (102 mm) diam (or smaller) SDR13.5 CPVC pipe for use in closed (process or supply) piping systems.
C. Acrylonitrile Butadiene Styrene (ABS) Pipe — Nom 4 in. (102 mm) diam (or smaller) Schedule 40 solid-core or cellular core ABS pipe for use in closed (process or supply) or vented (drain, waste or vent) piping systems.
D. Flame Retardant Polypropylene (FRPP) Pipe — Nom 4 in. (102 mm) diam (or smaller) Schedule 40 FRPP pipe for use in closed (process or supply) or vented (drain, waste or vent) piping systems.
3. Firestop System — The firestop system shall consist of the following:
A. Packing Material — Min 2 in. (51 mm) thickness of min 4 pcf (64 kg/m3) mineral wool batt insulation firmly packed into opening as a permanent form. Packing material to be recessed from bottom surface of floor or both surfaces of wall to accommodate the required thickness of fill material (Item 3B).
B. Fill, Void or Cavity Material* — Sealant — Min 1/2 in. (13 mm) thickness of fill material applied within the annulus, flush with bottom surface of floor or both surfaces of wall.
HILTI CONSTRUCTION CHEMICALS, DIV OF HILTI INC — FS-ONE Intumescent Sealant or FS-ONE MAX Intumescent Sealant
C. Metal Cover Plate — Min 28 ga. galv steel rectangular cover plate consisting of two halves with min 2 in. (51 mm) overlap at seam. Cover plate sized to overlap floor or wall surfaces by min 1-1/2 in. (38 mm). Overall length and width of cover plate shall not exceed opening diam plus 4 in. (102 mm). Cover plate cut to an ID that is max 1/4 in. (6 mm) larger than OD of pipe. Installed at underside of floor or both sides of wall between collar and floor or wall surfaces. Secured to floor or wall surface with min 1/4 in. (6 mm) diam by min 1-1/4 in. (32 mm) long steel expansion bolts or min 0.145 in. (3.7 mm) diam by 1-1/4 in. (32 mm) long powder actuated fasteners utilizing a 1-7/16 in. (36 mm) diam by 1/16 in. (1.6 mm) thick steel washer. As alternates to the anchors specified above, Hilti 1/4 in. (6 mm) diam by 1-1/4 in. (32 mm) long KWIK-CON II+ concrete screw anchor, or Hilti 1/4 in. (6 mm) diam by 1-3/4 in. (44 mm) long KWIK-BOLT.3 steel expansion anchor or Hilti X-DNI 27 PB S15 powder actuated floor pin with integral nom 9/16 in. (14 mm) diam washer. As alternates to the anchors specified above, Hilti 1/4 in. (6 mm) diam by 1-3/4 in. (44 mm) long KWIK-BOLT.3 steel expansion anchor or Hilti X-DNI 27 PB S15 powder actuated floor pin with integral nom 9/16 in. (14 mm) diam washer may be used. One fastener required at each corner of cover plate and at each end of seam. Intermediate fasteners shall be provided around perimeter of plate such that spacing between fasteners does not exceed 5 in. (127 mm).

Hilti Firestop Systems

Reproduced by HILTI, Inc. Courtesy of Underwriters Laboratories, Inc. January 09, 2015

Page: 1 of 2

System No. C-AJ-2631

CAJ 2631

D. Firestop Device* — Firestop Collar — Firestop collar to be sized for nom diam of penetrant and to be installed in accordance with the accompanying installation instructions. Collar to be installed and latched around the pipe and secured to the cover plate at underside of floor or both sides of wall using the anchor hooks provided with the collar. (Minimum 2 anchor hooks for 5-1/2 and 2 in. (38 and 51 mm) diam pipes, 3 anchor hooks for 3 and 4 in. (76 and 102 mm) diam pipes). The anchor hooks are to be secured to metal cover plate with no. 8 x 3/8 in. (10 mm) long or no. 10 x ¼ in. (13 mm) long self tapping steel screws with min ⅛ in. (13 mm) diam steel washers. For anchor hooks located over concrete floor or wall, hooks are to be secured through the cover plate and into the concrete with min 1/4 in. (6 mm) diam by min 1-1/4 in. (32 mm) long steel expansion bolts or min 0.145 in. (3.7 mm) diam by 1-1/4 in. (32 mm) long powder actuated fasteners utilizing a 1-7/16 in. (36 mm) diam by 1/16 in. (1.6 mm) thick steel washer or Hilti 1/4 in. (6 mm) diam by 1-1/4 in. (32 mm) long KWIK-CON II+ concrete screw anchor, or Hilti 1/4 in. (6 mm) diam by 1-3/4 in. (44 mm) long KWIK-BOLT.3 steel expansion anchor or Hilti X-DNI 27 PB S15 powder actuated floor pin with integral nom 9/16 in. (14 mm) diam washer.
HILTI CONSTRUCTION CHEMICALS, DIV OF HILTI INC — CP 643 50/1 5"N, CP 643 63/2"N. CP 643 90/3"N, CP 643 110/4"N Firestop Collar.

* Indicates such products shall bear the UL or cUL Certification Mark for jurisdictions employing the UL or cUL Certification (such as Canada), respectively.

Hilti Firestop Systems

Reproduced by HILTI, Inc. Courtesy of Underwriters Laboratories, Inc. January 09, 2015

Page: 2 of 2

3 INSULATED PIPE THROUGH CONCRETE FLOOR ASSEMBLY

SCALE : N.T.S

Joint Systems

System No. BW-S-0016

August 07, 2007

Assembly Ratings — 1 and 2 Hr (See Item 2)

Joint Width — 1/2 In. Max

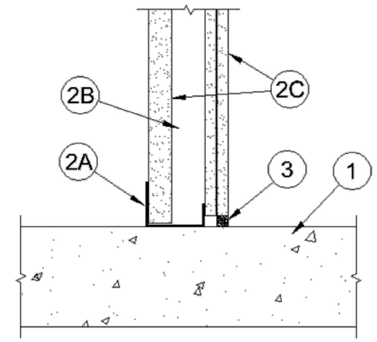

1. **Floor Assembly** — Min 4-1/2 in. (114 mm) thick reinforced lightweight or normal weight (100-150 pcf or 1600-2400 kg/m^3) structural concrete. Floor may also be constructed of any min 6 in. (152 mm) thick UL Classified hollow-core **Precast Concrete Units***.

See **Precast Concrete Units** (CFTV) category in the Fire Resistance Directory for names of manufactures.

2. **Wall Assembly —** The 1 or 2 hr fire rated gypsum board/steel stud shaft wall assembly shall be constructed of the materials and in the manner specified in the individual U400 or V400 Series Wall and Partition Design in the UL Fire Resistance Directory. In addition, the wall may incorporate a head-of-wall joint system constructed as specified in the HW Series Joint Systems in the UL Fire Resistance Directory. The wall shall include the following construction features:
A. **Steel Floor Runner** — "J"-shaped runners, min 2-1/2 in. (64 mm) deep, with unequal legs of 1 in. (25 mm) and 2 in. (51 mm), fabricated from min 24 MSG galv steel. Runners positioned with short leg toward finished side of wall. Runners attached to structural supports with steel fasteners located not greater than 2 in. (51 mm) from ends and not greater than 24 in. (610 mm) OC.
B. **Studs** — "C-H", "E" (back-to-back) or "C-T"-shaped studs, min 2-1/2 in. (64 mm) deep, fabricated from min 25 MSG galv steel. Cut to lengths 3/8 to 1/2 in. (10 to 13 mm) less than floor-to-ceiling height and spaced 24 in. (610 mm) OC.
C. **Gypsum Board*** — 1 in. (25 mm) thick gypsum liner panels and 1/2 in., 5/8 in. or 3/4 in. (13, 16 or 19 mm) thick gypsum panels installed as specified in the individual U400 or V400 Series shaft wall designs in the UL Fire Resistance Directory.

The hourly fire rating of the joint system is equal to the hourly fire rating of the wall.

3. **Fill, Void or Cavity Material* - Sealant —** Max separation between top of floor and bottom of gypsum board on the finish side is 1/2 in. Min 1/2 in. (13 mm) thickness of fill material installed on finish side of the wall between the bottom of the gypsum board and the top of the concrete floor, flush with surface of the finish side of wall.

UNITED STATES GYPSUM CO — Type A or ASP

2 Hour Fire Rated Through Penetration Firestop for Multiple Metal Pipe through Concrete Floors or Walls using FYRE-SHIELD.

TREMCO 3735 Green Rd. Beachwood, OH, 44122

Drawing not to scale

CAJ 1047

F-Rating = 2 Hr.
T-Rating = 0 Hr.

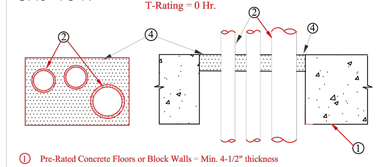

① Pre-Rated Concrete Floors or Block Walls = Min. 4-1/2" thickness
Max. Area of Opening = 288 sq. in., with a Max. Dimension of 24".

② Metallic Pipe: A) Steel Pipe - 8" diam. (or smaller) Sch. 40 (or heavier) steel pipe.
B) Conduit - 4" diam. (or smaller) EMT or 6" diam. (or smaller) steel conduit.
C) Iron Pipe - 8" diam. (or smaller) cast or ductile iron pipe.
D) Copper Tubing - 4" diam. (or smaller) Type L (or heavier) copper tubing.
E) Copper Pipe - 4" diam. (or smaller) Regular (or heavier) copper pipe.
NOTE: The maximum number of pipes within opening is 3. The annular space between pipes shall be min. 1-1/2" and a min. 1/2" between pipes and edge of opening.

③ Forming Material - (Not Shown, Optional) Nom. 1" thick polyurethane backer rod firmly packed into the opening as a permanent form.

④ FYRE-SHIELD - Min. 1/2" thickness mastic applied within annulus, flush with top surface of floor or with both surfaces of the wall assembly.

Project:
Location:
Installer:
Signature:

The Tremco products used above have been tested in accordance with the following:
• ASTM E814 (UL1479) Standard Test Method for Through Penetration Firestopping.

Date: 9/11/96 Drawing: TR-1047
Approved by: J. Pitcole

The above described assembly has been tested and is based on both past and anticipated performance criteria. Tremco shall not be liable for any damages, direct or consequential, resulting from use of this material or design. Tremco shall only be responsible for replacing material found to be defective.

1 or 2 Hour Fire Rated Through Penetration Firestop for Single Metal Pipe through Gypsum Walls using FYRE-SHIELD.

TREMCO 3735 Green Rd. Beachwood, OH, 44122

Drawing not to scale

WL 1097

F-Rating = 1 and 2 Hr.
T-Rating = 0 Hr.

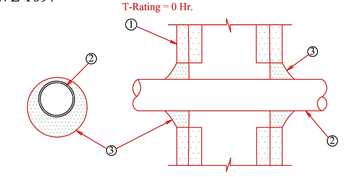

① Pre-Rated Gypsum Wallboard/Stud Wall Assembly

② Metallic Pipe - A) Steel Pipe - 8" diam. (or smaller) Sch. 40 (or heavier) steel pipe.
B) Iron Pipe - 8" diam. (or smaller) cast or ductile iron pipe.
C) Conduit - 4" diam. (or smaller) EMT or rigid steel conduit.
D) Copper Tubing - 4" diam. (or smaller) Type L (or heavier) copper tubing.
E) Copper Pipe - 4" diam. (or smaller) Regular (or heavier) copper pipe.
The annular space shall be min. 1/4" to max. 5/8" within the firestop system.

③ FYRE-SHIELD - Min. 1/2" thickness of sealant applied within opening. Additional sealant to be installed such that a min. 1/4" crown is formed around the penetrating item.

Project:
Location:
Installer:
Signature:

The Tremco products used above have been tested in accordance with the following:
• ASTM E814 (UL1479) Standard Test Method for Through Penetration Firestopping.

Date: 4/23/97 Drawing: TW-1097
Approved by: J. Pitcole

The above described assembly has been tested and is based on both past and anticipated performance criteria. Tremco shall not be liable for any damages, direct or consequential, resulting from use of this material or design. Tremco shall only be responsible for replacing material found to be defective.

2 Hour Fire Rated Through Penetration Firestop for Single Metal Pipe through Concrete Floors or Walls using FYRE-SHIELD.

TREMCO 3735 Green Rd. Beachwood, OH, 44122

Drawing not to scale

CAJ 1233

F-Rating = 2 Hr.
T-Rating = 0 Hr.

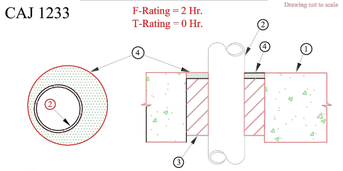

① Pre-Rated Concrete Floors or Block Walls – Min. 3" thick concrete floor assembly.
Min. 3-1/2" thick conrete wall assembly.

② Metallic Pipe: A) Steel Pipe- 8" diam. (or smaller) Sch. 40 (or heavier) steel pipe.
B) Iron Pipe- 8" diam. (or smaller) cast or ductile iron pipe.
C) Conduit - 4" diam. (or smaller) EMT or steel conduit.
D) Copper Tubing - 4" diam. (or smaller) Type L (or heavier) copper tubing.
E) Copper Pipe- 4" diam. (or smaller) Regular (or heaveir) copper pipe.
The annular space be min. 1/2" to max. 7/8".

③ Packing Material - Min. 2-1/2" thickness of mineral wool (min. 4.0 pcf) insulation, firmly packed into opening as a permanent form.

④ FYRE-SHIELD- Min. 1/2" thickness of sealant applied within annulus, flush with top surface of floor or both surfaces of wall assembly.

Project:
Location:
Installer:
Signature:

The Tremco products used above have been tested in accordance with the following:
• ASTM E814 (UL1479) Standard Test Method for Through Penetration Firestopping.

Date: 5/11/98 Drawing: TR-1233
Approved by: M. Starr

The above described assembly has been tested and is based on both past and anticipated performance criteria. Tremco shall not be liable for any damages, direct or consequential, resulting from use of this material or design. Tremco shall only be responsible for replacing material found to be defective.

NOTE: TREMCO BRAND IS SHOWN AS ONE POSSIBLE MANUFACTURER. CONTRACTOR MAY INSTALL APPROVED SUBSTITUTIONS

FIRE DETAIL PENETRATION

CLIENT :

747 4th Street

Interior Renovations

747 4th Street
Miami Beach, FL 33139
Folio: 02-4203-009-3050

CDS CASTELLANOS DESIGN STUDIO
333 SE 2ND AVENUE, SUITE 2066
MIAMI, FL 33131
Tel: 786.218.5335
License #AA 26002467
WWW.CASTELLANOSDESIGN.COM

No.	DATE	ISSUED / REVISED
1	29 AUG/16	SCHEMATIC DESIGN
2	1 SEP/16	DESIGN REVISION - 1
3	14 SEP/16	DESIGN REVISION - 2
4	30 SEP/16	CONSTRUCTION DOCUMENTS
5	15 NOV/16	CLIENT REVISION
6	05 DEC/16	PERMITTING REVISION - 1
7	03 FEB/17	PERMITTING REVISION - 2
8	14 MAR/17	PERMITTING REVISION - 3
9	13 JUN/17	PERMITTING REVISION - 4

ALL DRAWN AND WRITTEN MATERIAL CONTAINED HEREIN IS THE SOLE PROPERTY OF CASTELLANOS DESIGN STUDIO, LLC. AND MAY NOT BE DUPLICATED, PUBLISHED, DISCLOSED OR USED WITHOUT EXPRESS WRITTEN CONSENT OF CASTELLANOS DESIGN STUDIO, LLC.
THE DRAWINGS ARE SCOPE DOCUMENTS WHICH INDICATE THE GENERAL SCOPE OF WORK, AND SUCH, DO NOT NECESSARILY DESCRIBE ALL WORK REQUIRED FOR THE FULL PERFORMANCE AND COMPLETION OF THE WORK. GENERAL CONTRACTOR IS TO FURNISH AND INSTALL ALL ITEMS REQUIRED FOR THE PROPER COMPLETION OF ITS WORK WITHOUT ADJUSTMENT TO THE CONTRACT AMOUNT UNLESS SCOPE OF WORK CHANGES FROM THAT INDICATED ON THE DRAWINGS. IN THE EVENT OF A CONFLICT WITHIN OR AMONG THE CONTRACT DOCUMENTS, THAT DOCUMENT PLACING THE GREATEST BURDEN UPON GENERAL CONTRACTOR SHALL GOVERN. THE GENERAL CONTRACTOR SHALL CAREFULLY STUDY AND COMPARE ALL DRAWINGS, REPORTING ANY ERROR, INCONSISTENCY OR OMISSION HE MAY DISCOVER AND REPORT TO CDS AND IN NO CASE SHALL PROCEED IN UNCERTAINTY.

SEAL :

WESLEY ART CASTELLANOS
FLORIDA ARCHITECT LICENSE AR 96133

PROJECT NO : 2016-18

FIRE PENETRATION DETAILS

CHECKED BY : WC
DRAWN BY : AA
SCALE:

SHEET NO :

A-5.2

© 2016 BY CDS