FIRE ALARM SYSTEM NOTES

1. CONTRACTOR SHALL PRODUCE SHOP DRAWINGS AND SUBMIT SIX COPIES TO THE ENGINEER PRIOR BEGINNING ANY WORK. SHOP DRAWINGS SHALL SHOW A UNIQUE DEVICE NUMBER AT FLOOR PLAN THAT MATCHES WITH THE RISER DIAGRAM FOR ALL DEVICES. SHOP DRAWING SHALL ALSO SHOW WIRES, CONDUCTOR TYPES, RACEWAY LOCATIONS AND SIZES, EQUIPMENT CATALOG NUMBERS, BATTERY CALCS., AND DESCRIPTIONS CLEARLY HIGH-LIGHTED TO SPECIFICALLY INDICATE WHICH PRODUCTS ARE PROPOSED FOR USE. AFTER SATISFACTORY REVIEW BY THE ENGINEER, THE CONTRACTOR SHALL SEEK APPROVAL BY THE FIRE MARSHALL. AFTER SATISFACTORY REVIEW BY THE FIRE MARSHALL WORK SHALL COMMENCE.
2. ALL COMPONENTS SHALL BEAR THE U. L. LABEL FOR FIRE SERVICE USE AND SHALL BE COMPATIBLE FOR USE WITH ALL INTERCONNECTING EQUIPMENT.
3. THE COMPLETE SYSTEM SHALL BE INSTALLED IN ACCORDANCE WITH THE MANUFACTURER'S RECOMMENDATIONS, N.E.C., N.F.P.A., A.D.A., ANSI, F.B.C., AND ALL LOCAL CODES.
4. HORNS AND SPEAKERS SHALL BE OF SUCH CHARACTER AND SO LOCATED, AS TO BE CLEARLY HEARD THROUGHOUT AND ABOVE AMBIENT NOISE LEVELS, db LEVELS SHALL BE SET PER NFPA 72.
5. MINIMUM CONDUIT SIZE SHALL BE 1/2" FOR ALL RUNS. CONDUIT SHALL LOOP ALL DEVICES AND RETURN TO F.A.C.P.
6. ALL CONDUCTORS SHALL BE COPPER AND SHALL BE SIZED FOR NO MORE THAN 1 dB LOSS. MINIMUM #18 AWG AND #14 AWG FOR HORN AND/OR STROBE CIRCUITS.
7. CONDUCTOR INSULATION FOR CABLES SHALL BE TYPE TFN. IF CABLES PENETRATE INTO OR THROUGH PLENUM AREAS USED FOR TRANSFER OF ENVIRONMENTAL AIR, THEY SHALL BE TYPE FPLP, TEFLON INSULATED TYPE.
8. THE CONTRACTOR SHALL FURNISH AND INSTALL ALL EQUIPMENT, CONDUIT SYSTEM, CON- DUCTORS, DEVICES, ETC., AND ALL OTHER ACCESSORIES REQUIRED FOR AN ACCEPTABLE AND FULLY FUNCTIONAL SYSTEM.
9. FINAL CONNECTIONS BETWEEN EQUIPMENT AND WIRING SYSTEM SHALL BE MADE UNDER DIRECT SUPERVISION OF A QUALIFIED TECHNICAL REPRESENTATIVE OF THE EQUIPMENT MANU- FACTURER, WHO SHALL TEST THE SYSTEM COMPLETELY AND PROVIDE A CERTIFICATE IN WRITING AS TO THE PROPER INSTALLATION AND OPERATION OF THE FIRE ALARM SYSTEM PRIOR TO FINAL ACCEPTANCE OF THE SYSTEM BY THE OWNER.
10. AS-BUILT DRAWINGS SHOWING POINT BY POINT CONNECTIONS OF ALL DEVICES AND FINAL EQUIPMENT LOCATIONS SHALL BE GIVEN TO THE OWNER UPON ACCEPTANCE OF INSTALLATION BY THE OWNER.
11. ALL EQUIPMENT SHALL BE BY FCI OR APPROVED EQUAL.
12. CONTRACTOR SHALL SUBMIT FIRE ALARM SYSTEM SHOP DRAWINGS, INCLUDE TECHNICAL DATA SHEETS TO BUILDING DEPARTMENT THAT COMPLY WITH FIRE MARSHAL'S OFFICE FIRE ALARM SYSTEM INSTALLATION REQUIREMENTS. FOR APPROVAL PRIOR TO INSTALLATION.
13. ALL DUCT SMOKE DETECTORS SHALL INITIATE A TROUBLE/SUPERVISORY SIGNAL IN THE FIRE ALARM SYSTEM NOT A FULL ALARM.

FIRE ALARM LEGEND

P	FIRE ALARM MANUAL PULL STATION
WP	WEATHERPROOF FIRE ALARM HORN/STROBE COMBINATION
	FIRE ALARM HORN / STROBE COMBINATION
	FIRE ALARM STROBE
	FIRE ALARM HORN
S	FIRE ALARM SPEAKER
	PHOTOELECTRIC SMOKE DETECTOR, ADDRESSABLE
	DUCT SMOKE DETECTOR, ADDRESSABLE,
	HEAT DETECTOR, FIXED TEMPERATURE (135°).
FS	FIRE ALARM FLOW SWITCH
TS	FIRE ALARM TAMPER SWITCH
R	CONTROL RELAY
FACP	FIRE ALARM CONTROL PANEL. ADDRESSABLE
FANP	FIRE ALARM ENUNCIATOR PANEL

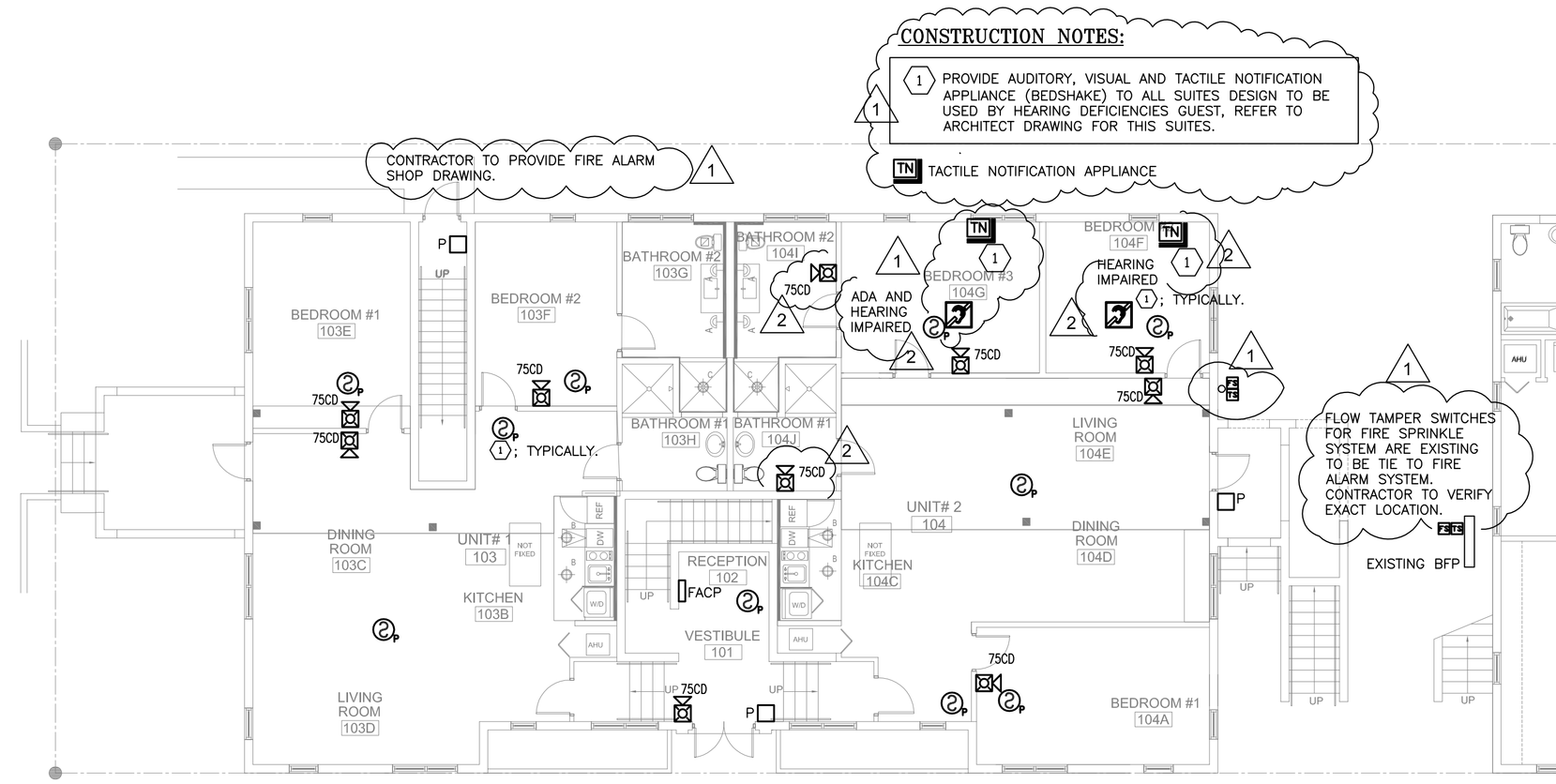

1 FA-1 **FIRE ALARM GROUND FLOOR PLAN**
SCALE: 1/8"=1'-0"

NOTE:
1-THERE SHALL BE NO USE OF CONCEALED / RETRACTABLE EXIT SIGNS, EMERGENCY LIGHTS AND FIRE ALARM DEVICES.
2-REFER TO LIFE SAFETY PLANS SHEET FOR FIRE ALARM DEVICES LOCATION.

FIRE ALARM TO COMPLY WITH NFPA 72 2010 EDITION, 2007 EDITION.

1 SUITE ROOM SMOKE ALARM 120V, TYPICAL ALL SUITE.

2 PROVIDE NEW FIRE ALARM HORN ADJUSTABLE DBA, FIELD VERIFY AND SET AT 75DBA AT THE PILLOW FOR DWELLING UNITS. TYPICAL.

NOTES
1. SYSTEM SHALL BE ADDRESSABLE MICRO-PROCESSOR BASED WITH POINT ANNUNCIATION. NOTIFIER
2. NOT USED
3. INSTALL SYSTEM AS DIRECTED BY MANUFACTURERS APPROVED SHOP DRAWINGS.
4. PROVIDE 1/2" CONDUIT TO TELEPHONE WOOD BACKBOARD FOR CONNECTION TO ALARM COMMUNICATIONS TRANSMITTER.
5. PROVIDE SILENT KNIGHT AUTO DIALER #5104.

NOTE:
ALARM STROBES AND HORNS ARE NOT BE ON THE SAME ANNUNCIATION CIRCUIT. ALARM STROBES SHALL BE ACTIVATED ON THE GENERAL ALARM AND SHALL REMAIN ON UNTIL THE FACP IS RESET.

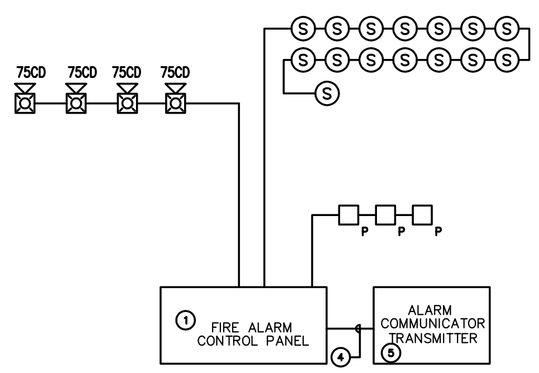

FIRE ALARM RISER DIAGRAM

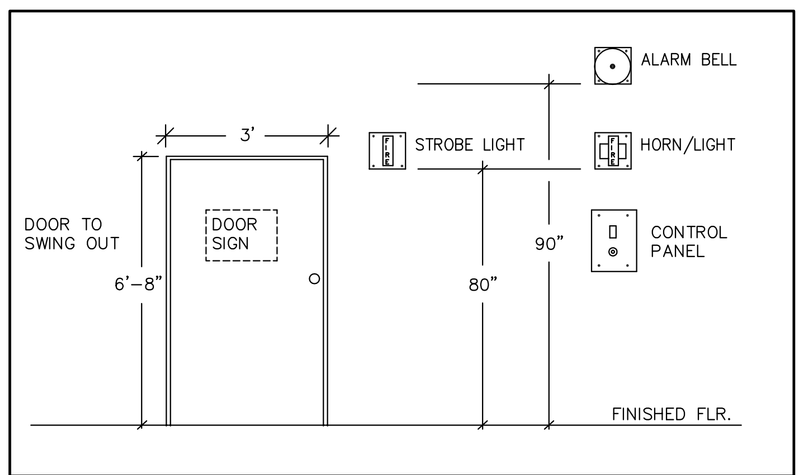

TYPICAL WALL ELEVATION
N.T.S.

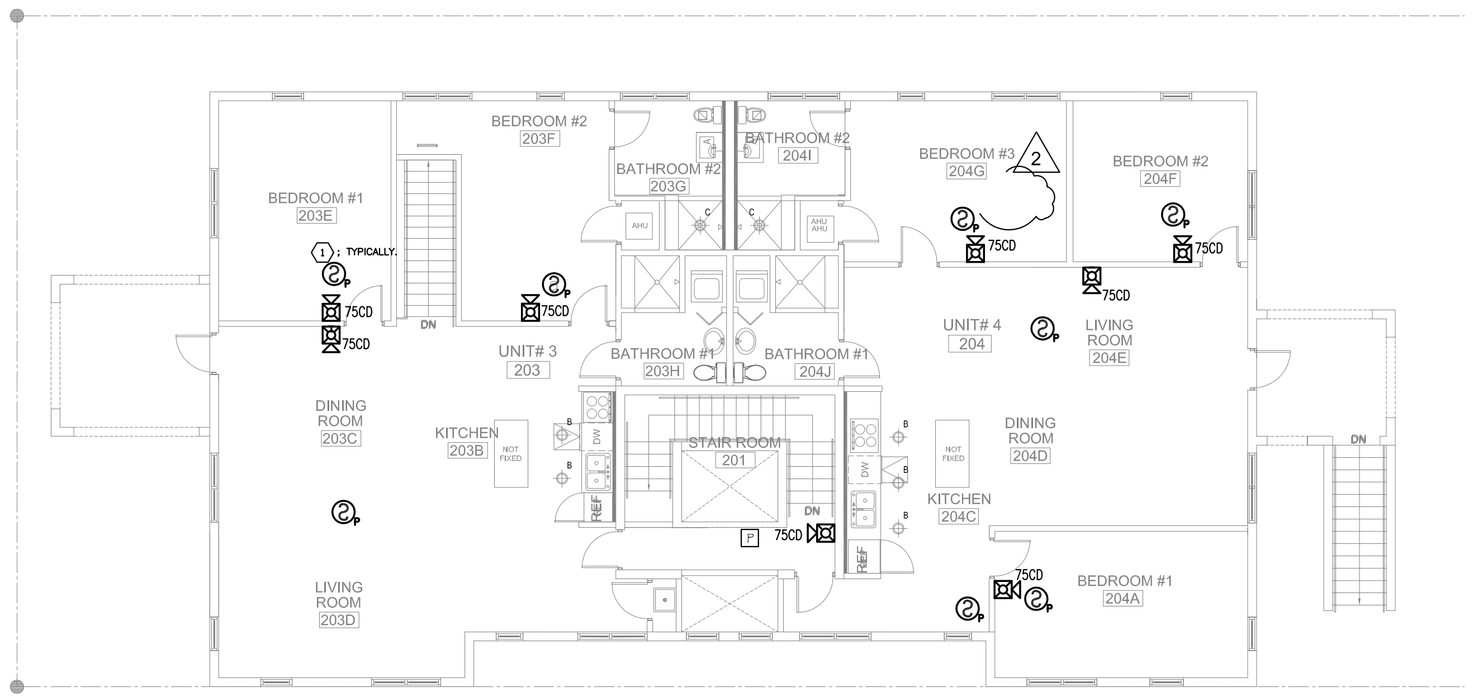

2 FA-1 **FIRE ALARM SECOND FLOOR PLAN**
SCALE: 1/8"=1'-0"

CLIENT :

747 4th Street

Interior Renovations

747 4th Street
Miami Beach, FL 33139
Folio: 02-4203-009-3050

CDS
333 SE 2ND AVENUE, SUITE 2066
MIAMI, FL 33131
Tel: 786.218.5335
License #AA 26002467
WWW.CASTELLANOSDESIGN.COM

No.	DATE	ISSUED / REVISED
1	02-16-17	RTC
2	05-03-17	RTC

ALL DRAWN AND WRITTEN MATERIAL CONTAINED HEREIN IS THE SOLE PROPERTY OF CASTELLANOS DESIGN STUDIO, LLC. AND MAY NOT BE DUPLICATED, PUBLISHED, DISCLOSED OR USED WITHOUT EXPRESS WRITTEN CONSENT OF CASTELLANOS DESIGN STUDIO, LLC.

THE DRAWINGS ARE SCOPE DOCUMENTS WHICH INDICATE THE GENERAL SCOPE OF WORK, AND SUCH, DO NOT NECESSARILY DESCRIBE ALL WORK REQUIRED FOR THE FULL PERFORMANCE AND COMPLETION OF THE WORK. GENERAL CONTRACTOR IS TO FURNISH AND INSTALL ALL ITEMS REQUIRED FOR THE PROPER COMPLETION OF ITS WORK WITHOUT ADJUSTMENT TO THE CONTRACT AMOUNT UNLESS SCOPE OF WORK CHANGES FROM THAT INDICATED ON THE DRAWINGS. IN THE EVENT OF A CONFLICT WITHIN OR AMONG THE CONTRACT DOCUMENTS, THAT DOCUMENT PLACING THE GREATEST BURDEN UPON GENERAL CONTRACTOR SHALL GOVERN. THE GENERAL CONTRACTOR SHALL CAREFULLY STUDY AND COMPARE ALL DRAWINGS, REPORTING ANY ERROR, INCONSISTENCY OR OMISSION HE MAY DISCOVER AND REPORT TO CDS AND IN NO CASE SHALL PROCEED IN UNCERTAINTY.

SEAL :

WESLEY ART CASTELLANOS
FLORIDA ARCHITECT LICENSE AR 96133

JOB # 16-0908

arpe engineering inc
Gables International Plaza
2655 Le Jeune Road, Suite 1109
Coral Gables, Florida 33134
Phone > 305 444 9809
Fax > 305 444 9827
Engineering Design:
> Mechanical > Electrical
> Plumbing > Fire Protection
www.arpe-eng.com
Amarilis Rodriguez, P.E.
License Number 60236
C.A. 26359
Signature
Date

PROJECT NO : 2016-18

FIRE ALARM GROUND + SECOND FLOOR PLAN

CHECKED BY : A.R.
DRAWN BY : AR
SCALE: AS SHOWN
© 2016 BY CDS

SHEET NO : FA-1