330 DS (21") SOLATUBE CURB-MOUNT FLASHING HARD CEILING

NOTES:

1. STRUCTURAL ELEMENTS (PLYWOOD, RAFTERS, DRYWALL ETC.) BY OTHERS & SHOWN FOR REFERENCE ONLY.
2. ALL TUBE JOINTS & SEAMS TAPED WITH 2" FOIL TAPE (NOT SHOWN).

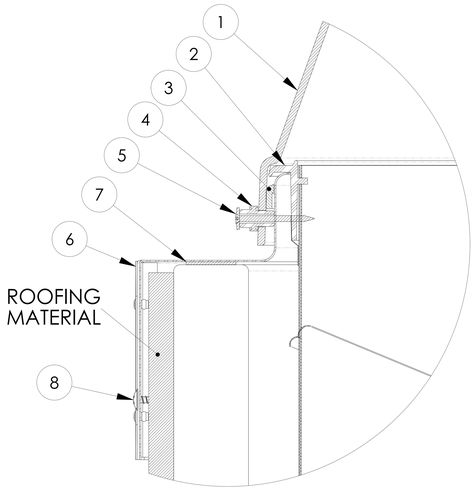

DETAIL A
SCALE 3 : 1

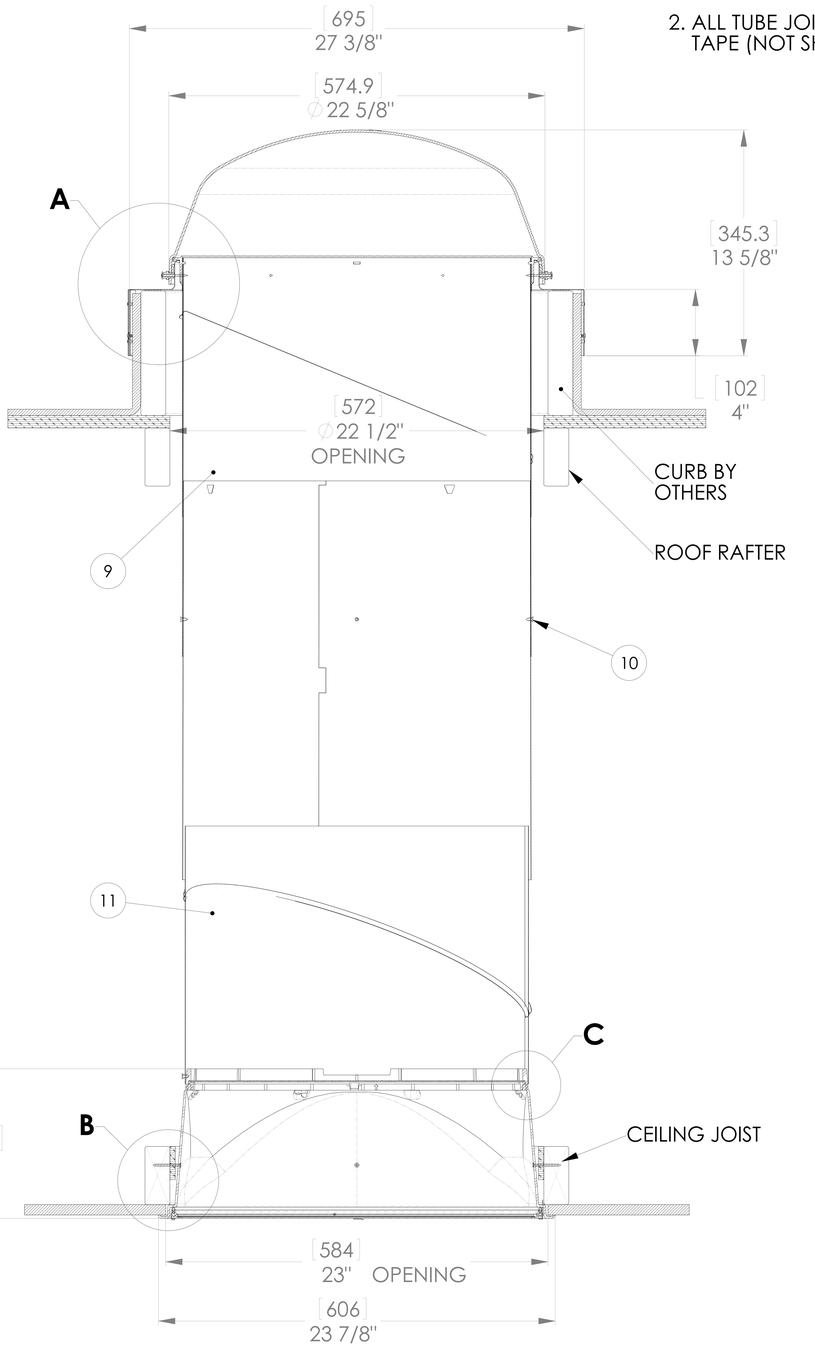

FULL SECTION
SCALE 1:1

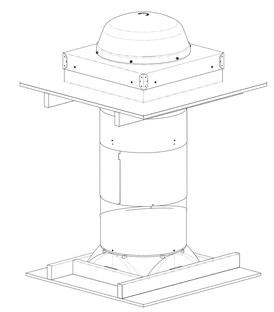

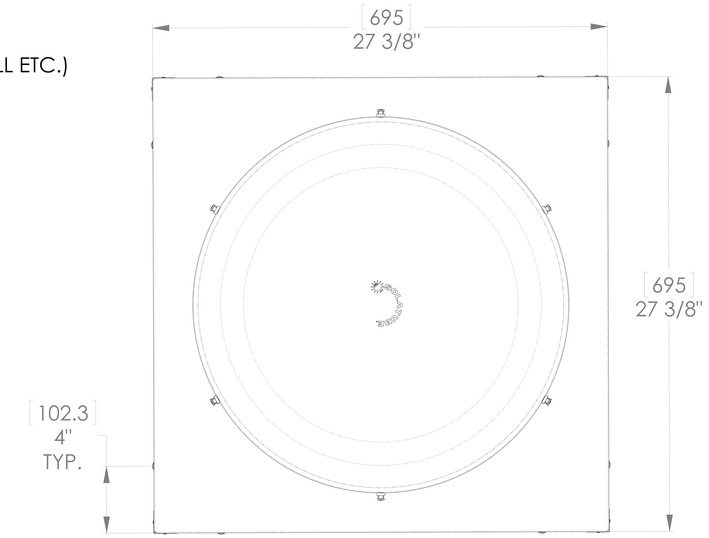

TOP VIEW
SCALE 1:1

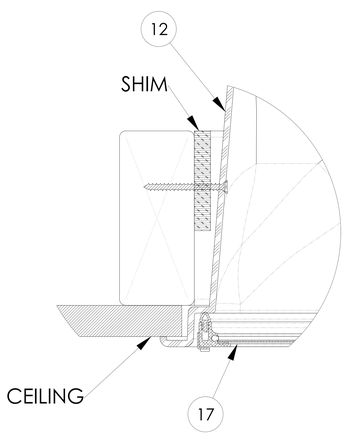

DETAIL B
SCALE 3 : 1

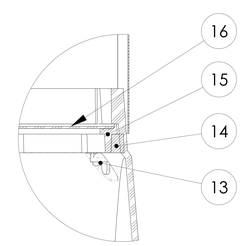

DETAIL C
SCALE 3 : 1

ITEM NO.	QTY.	PART NO.	DESCRIPTION	NOTES
1	1	509100	DOME 330 DS	
2	1	400781	DOME RING 330 DS	
3	1	620120	PILE WEATHERSTRIP SEAL	
4	3	700870	SPACER	
5	3	700860	SCREW #8x1.5" SMS	
6	1	230640	FLASHING CURB STAMPED	
7	1	700280	SEALANT URETHANE	AS REQUIRED
8	8	700480	SCREW #10 X 2" SMS	
9	1	300710	TOP TUBE	
10	1	301770	TUBE 24" EXTENSION	
11	1	301730	TUBE BOTTOM	
12	1	401880	RTS TRANSITION	
13	6	400795	RTS LENS TAB	USED IN 420220 ASSEMBLY
14	1	600260	LENS SEAL	USED IN 420220 ASSEMBLY
15	1	401070	LENS RETAINER RING	USED IN 420220 ASSEMBLY
16	1	400150	NATURAL EFFECTS LENS	USED IN 420220 ASSEMBLY
17	1	402010/20	DIFFUSER FRAME ASSEMBLY	VUSION OR OPTIVIEW

UNLESS OTHERWISE SPECIFIED:
DIMENSIONS ARE IN INCHES
TOLERANCES:
ANGULAR: ±0.5°
.X ± .1
.XX ± .02
.XXX ± .005

SOLATUBE INTERNATIONAL, INC.
COPYRIGHT 2002
WWW.SOLATUBE.COM

SOLATUBE
2210 OAK RIDGE WAY
VISTA, CALIFORNIA 92081-8341
PH (760) 597-4400

TITLE: 330 DS (21") CURB FLASHING HARD CEILING

MATERIAL -- --	DRAWN BY STEVENS	DATE 10/9/15
FINISH --	CHECKED BY --	DATE --
DO NOT SCALE DRAWING	APPROVED BY --	DATE --

SIZE | DWG. NO. 330DS-CF-HC | REV 1
SCALE: 1:1 | SHEET 1 OF 1

330 DS (21") SOLATUBE
8" SELF FLASHING
HARD CEILING

NOTES:

1. STRUCTURAL ELEMENTS (PLYWOOD, RAFTERS, DRYWALL ETC.) BY OTHERS & SHOWN FOR REFERENCE ONLY
2. ALL TUBE JOINTS & SEAMS TAPED WITH 2" FOIL TAPE (NOT SHOWN)

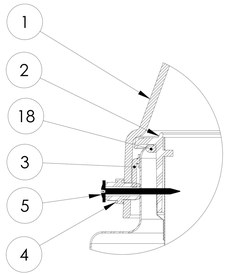

DETAIL A
SCALE 3 : 1

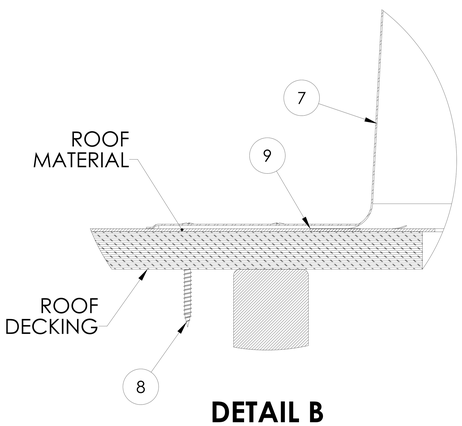

DETAIL B
SCALE 3 : 1

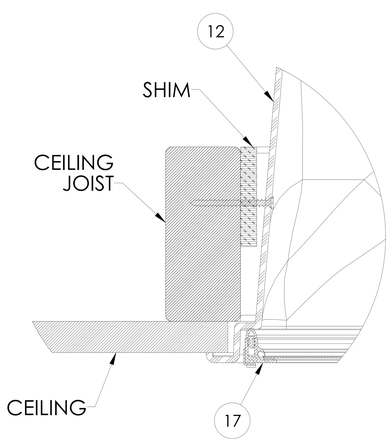

DETAIL C
SCALE 3 : 1

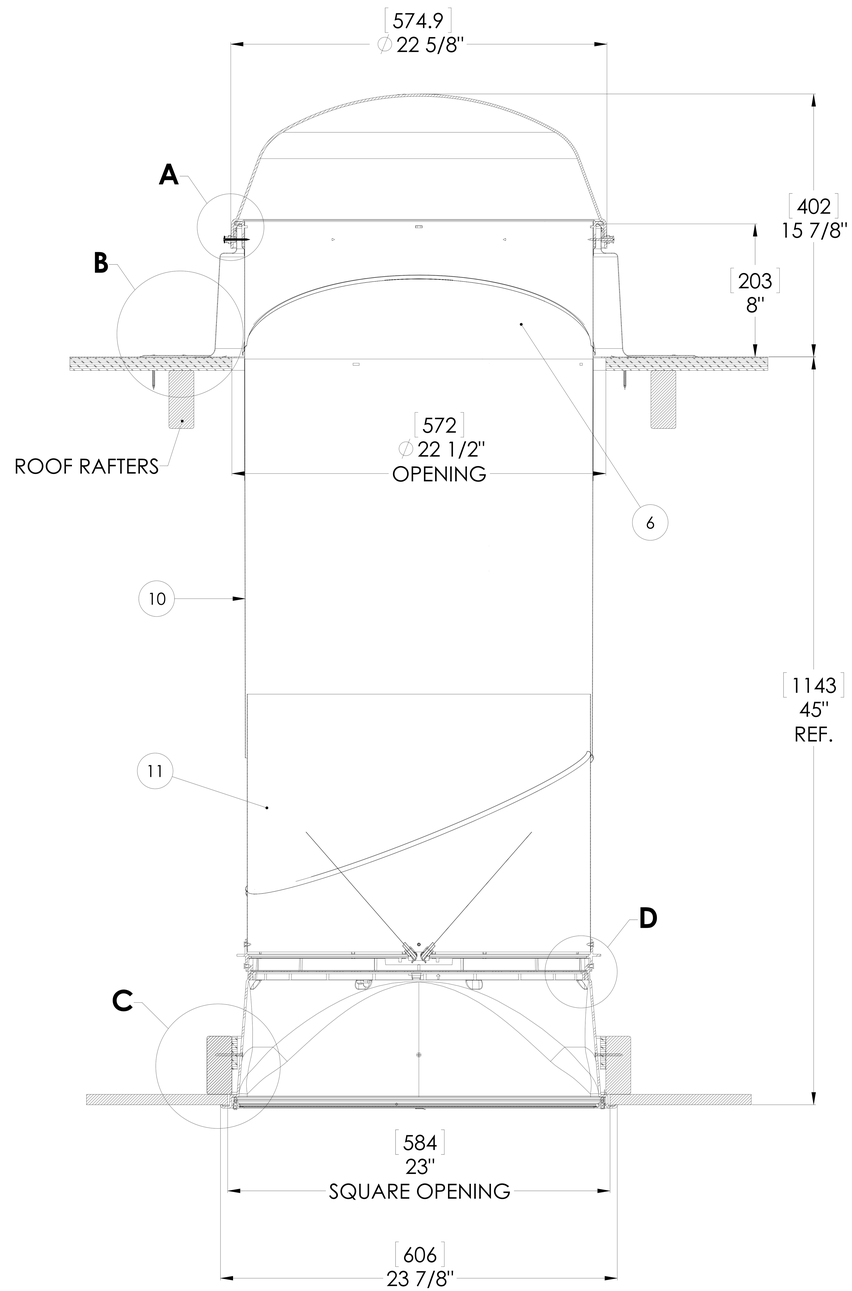

FULL SECTION
SCALE 1:1

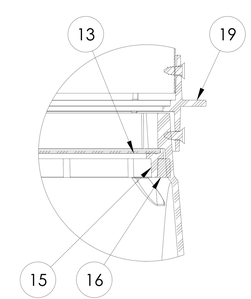

DETAIL D
SCALE 3 : 1

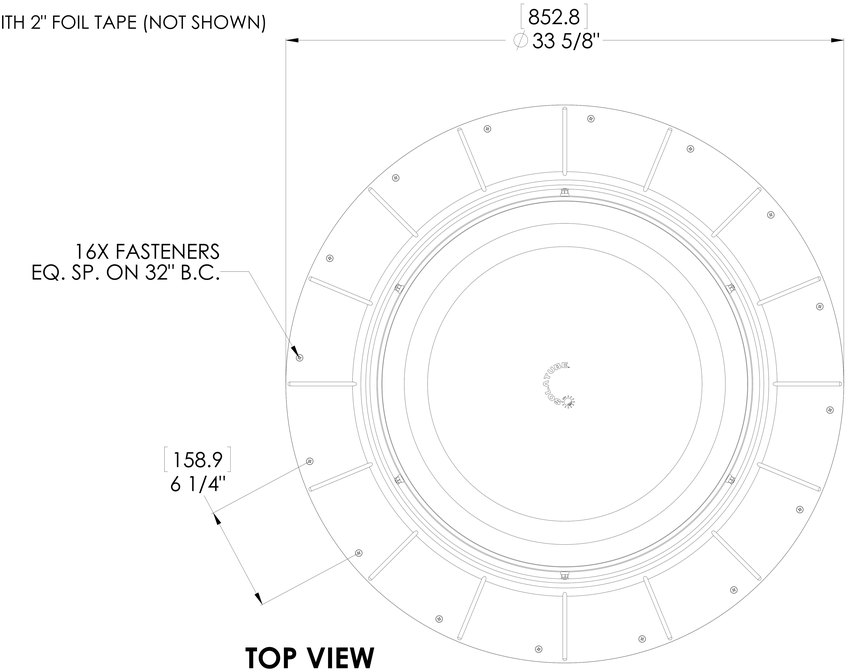

TOP VIEW
SCALE 1:1

ITEM NO.	QTY.	PART NO.	DESCRIPTION	NOTES
1	1	509100	DOME 330 DS	
2	1	400785	TUBE RING	
3	1	600280	PILE WEATHER STRIP	
4	6	700860	SCREW #8x1.5" SMS	
5	6	700870	SPACER	
6	1	301710	TOP ANGLE ADAPTER TUBE	
7	1	200870	FLASHING 8" HIGH	
8	16	700480	SCREW #10 X 2" SMS	20 QTY. REQUIRED FOR HVHZ
9	1	700280	SEALANT URETHANE	
10	1	301770	TUBE 24" EXTENSION	
11	1	301730	BOTTOM ANGLE ADAPTER TUBE	
12	1	401880	RTS TRANSITION	
13	1	400150	NATURAL EFFECTS LENS	USED IN 420220 ASSEMBLY
14	8	400795	RTS LENS TAB (NOT SHOWN)	USED IN 420220 ASSEMBLY
15	1	401070	LENS RETAINER RING	USED IN 420220 ASSEMBLY
16	1	600260	LENS SEAL	USED IN 420220 ASSEMBLY
17	1	402010/20	DIFFUSER 21" FRAME ASSY	VUSION OR OPTIVIEW LENS
18	1	600240	GLAZING ROPE	
OPTIONAL COMPONENTS				
ITEM NO.	QTY.	PART NO.	DESCRIPTION	NOTES
19	1	570003	21" DAYLIGHT DIMMER	

UNLESS OTHERWISE SPECIFIED:
DIMENSIONS ARE IN INCHES
TOLERANCES:
ANGULAR: ±0.5°
X ± .1
.XX ± .02
.XXX ± .005

MATERIAL
--
--

FINISH
--

DO NOT SCALE DRAWING

SOLATUBE INTERNATIONAL, INC.
COPYRIGHT 2015

WWW.SOLATUBE.COM

DRAWN BY: STEVENS — DATE: 3/13/08
CHECKED BY: -- — DATE: --
APPROVED BY: -- — DATE: --

SOLATUBE®
2210 OAK RIDGE WAY
VISTA, CALIFORNIA 92081-8341
PH (760) 597-4400

TITLE: **330 DS (21") SELF FLASHING HARD CEILING**

SIZE | DWG. NO. **330DS-SF-HC** | REV **2**

SCALE: 1:1 | SHEET 1 OF 1