1.0 – SYSTEM OVERVIEW

TABLE OF CONTENTS

1.1 – APPLICATION & USE ..... P. 1-3
1.2 – PRODUCT SPECIFICATION TABLE ..... P. 1-5

1.0 – SYSTEM OVERVIEW
1.1 – APPLICATION & USE

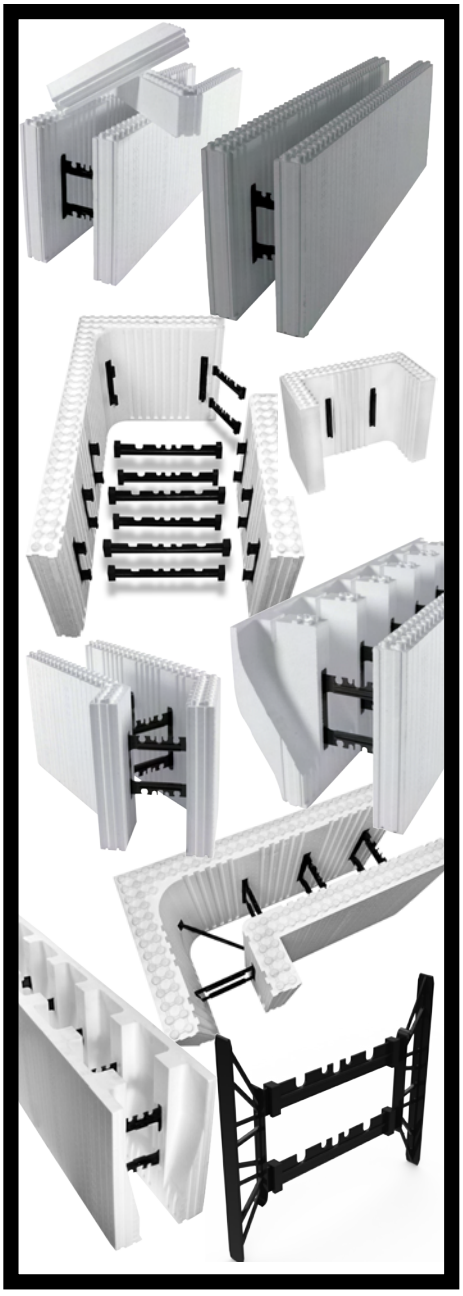

LOGIX Insulated Concrete Forms are used to create solid reinforced concrete walls that are pre-insulated for use both above and below grade. LOGIX walls are particularly effective for residential, light commercial, institutional, and industrial buildings, providing excellent insulation as well as thermal mass and structural strength. LOGIX walls offer a 4-hour fire resistance rating.

LOGIX Insulated Concrete Forms are based on the simple concept of modular interlocking blocks. These "blocks" or "forms" are made of expanded polystyrene (EPS) panels, held together with high-density polypropylene webs. LOGIX leads the industry in builder friendliness, featuring thick 2-3/4 inch (70 mm) foam in each panel.

LOGIX forms are dry stacked using a running bond. Reinforcing steel is inserted in the wall cavity as required, and the forms are filled with concrete to form a monolithic insulated wall.

LOGIX forms are generally 48 inches (1220 mm) in length and 16 inches (406 mm) in height. They come in a range of concrete core thicknesses, from 4 inch (102 mm) to 12 inch (305 mm), to accommodate most design requirements. In addition, LOGIX Xtenders can increase the core thickness to virtually any width wider than 12 inches (305 mm).

LOGIX is available in a wide variety of special form units and accessories, including corners, brick ledges, straight panels, t-walls, pilasters, and knock-down forms permit the LOGIX system to be adapted to many different

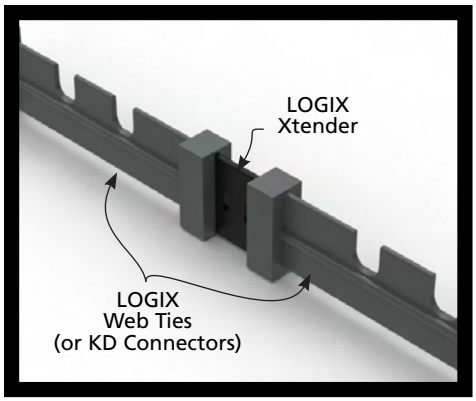

situations. Most LOGIX forms are also available in 8 inch (203 mm) height for additional design flexibility.

The plastic webs that hold the LOGIX forms together are made from recycled plastic. In addition to form support, the webs are designed to conveniently hold reinforcing steel in place prior to concrete placement, and act as a fastening surface for wall finish materials. The outer face of the web is 14-3/8 inch (365 mm) high and 1-1/4 inch (32 mm) wide, and is embedded in the foam 1/2 inch (13 mm) deep to comply with EIFS siding manufacturer standards.

LOGIX offers solid products and quality service from seven key manufacturing locations situated throughout North America. Our products are designed to perform better in the field, providing trouble-free, profitable installations time after time. Our commitment to product quality and continual innovation is backed up by over 50 years of ICF manufacturing experience.

1.2 – PRODUCT SPECIFICATION TABLE

LOGIX manufactures both assembled and unassembled insulated concrete form units. LOGIX assembled forms, known as "LOGIX PRO", are delivered to the job site as assembled form blocks. LOGIX unassembled forms (or knock-down forms), known as "LOGIX KD", are delivered to the job site in components that make up the form blocks - the form panels and KD Connectors. LOGIX KD are assembled on the job site.

Below is a summary of the types of LOGIX PRO and LOGIX KD forms available.

LOGIX PRO (assembled form blocks)

	DESCRIPTION
LOGIX Pro	White in color
LOGIX Pro Platinum[3]	Offers higher R-value[1] than LOGIX Pro. Grey in color. Made with BASF Neopor.
LOGIX Pro TX	LOGIX Pro with termite resistant additive Preventol[2]. White in color.
LOGIX Pro Platinum[3] TX	LOGIX Pro Platinum with Preventol. Grey in color.

LOGIX KD (unassembled form blocks)

	DESCRIPTION
LOGIX KD	White in color
LOGIX KD Platinum[3]	Offers higher R-value[1] than LOGIX KD. Grey in color. Made with BASF Neopor.
LOGIX KD TX	LOGIX KD with termite resistant additive Preventol[2]. White in color.
LOGIX KD Platinum[3] TX	LOGIX KD Platinum with Preventol. Grey in color.

Notes:

1. See **Section 8.5** for LOGIX R-values.
2. Preventol is an effective termite resistant additive.
3. Care should be taken to protect exposed foam surfaces from reflected sunlight and prolonged solar exposure until wall cladding or finish material is applied. Shade exposed foam areas, or remove sources of reflective surfaces, where heat build up onto exposed foam might occur. For more information refer to BASF Technical Leaflet N-4 Neopor, "Recommendations for packaging, transporting, storing and installing building insulation products made from Neopor EPS foam." (The BASF Technical Leaflet is attached to every bundle of LOGIX Platinum forms delivered to a job site).

1.2 – PRODUCT SPECIFICATION TABLE CONT'D

STRAIGHT FORMS

LOGIX FORM PANELS	STANDARD					TAPER TOP					BRICK LEDGE				
															
STANDARD 	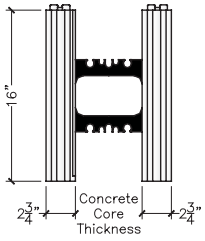					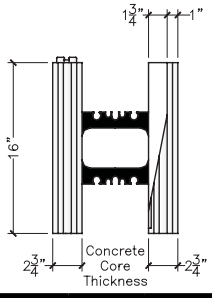					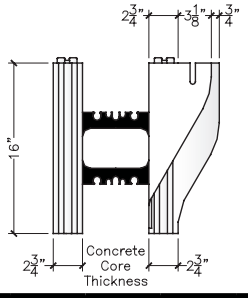				
Conc.Core Thickness	**4**	**6.25**	**8**	**10**	**12**	**4**	**6.25**	**8**	**10**	**12**	**4**	**6.25**	**8**	**10**	**12**
Width Top[1]	9.5	11.75	13.5	15.5	17.5	9.5	11.75	13.5	15.5	17.5	13.375	15.625	17.375	19.375	21.375
Width Bot.[1]	9.5	11.75	13.5	15.5	17.5	9.5	11.75	13.5	15.5	17.5	9.5	11.75	13.5	15.5	17.5
Form Type[2]	KD/P	KD/P	KD/P	KD/P	KD	KD	KD/P	KD/P	KD/P	KD	KD/P	KD/P	KD/P	KD/P	KD
TAPER TOP 						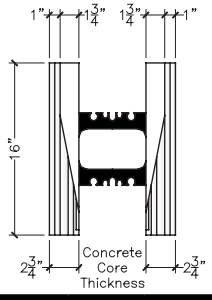					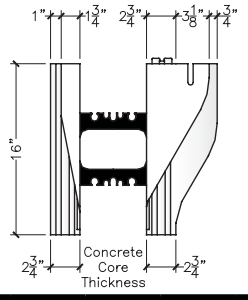				
Conc.Core Thickness						**4**	**6.25**	**8**	**10**	**12**	**4**	**6.25**	**8**	**10**	**12**
Width Top[1]						9.5	11.75	13.5	15.5	17.5	13.375	15.625	17.375	19.375	21.375
Width Bot.[1]						9.5	11.75	13.5	15.5	17.5	9.5	11.75	13.5	15.5	17.5
Form Type[2]						KD	KD	KD	KD	KD	KD	KD	KD	KD	KD
BRICK LEDGE 											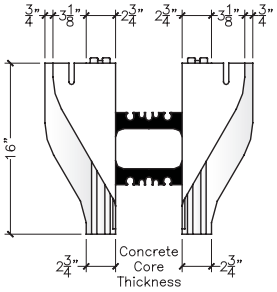				
Conc.Core Thickness											**4**	**6.25**	**8**	**10**	**12**
Width Top[1]											17.25	19.5	21.25	23.25	25.25
Width Bot.[1]											9.5	11.75	13.5	15.5	17.5
Form Type[2]											KD	KD	KD	KD	KD

1. Width at Top and Bottom is measured from outside face to outside face of forms.
2. "KD" and "P" denotes LOGIX KD (unassembled forms) and LOGIX PRO (assembled forms), respectively.

REPRINTED 2017

Rev. Dec 10/16

CORNER FORMS

	Left Hand Corner Form	Right Hand Corner Form
4 inch Concrete Core Thickness	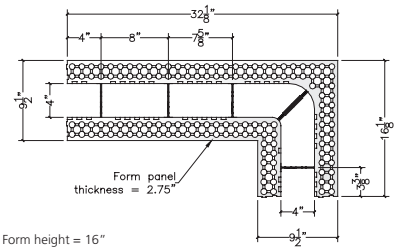 Form height = 16"	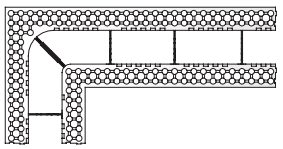 (dimensions similar)
Form Type[1]	**KD/P**	**KD/P**
6.25 inch Concrete Core Thickness	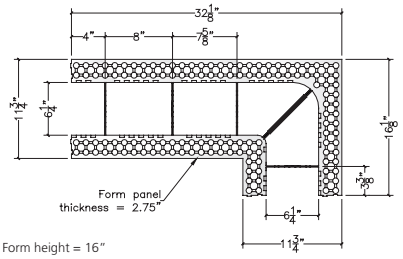 Form height = 16"	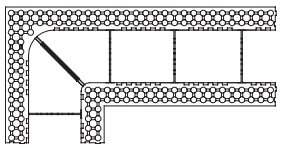 (dimensions similar)
Form Type[1]	**KD/P**	**KD/P**
8 inch Concrete Core Thickness	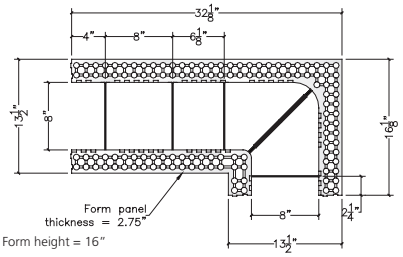 Form height = 16"	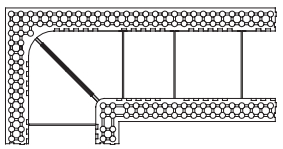 (dimensions similar)
Form Type[1]	**KD/P**	**KD/P**
10 inch Concrete Core Thickness	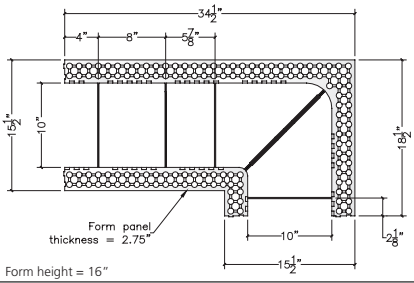 Form height = 16"	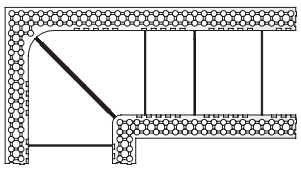 (dimensions similar)
Form Type[1]	**KD/P**	**KD/P**
12 inch Concrete Core Thickness	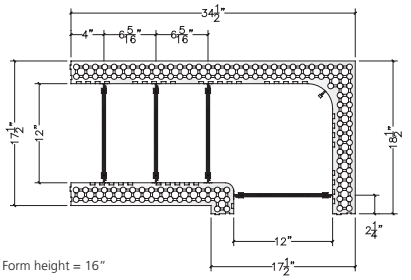 Form height = 16"	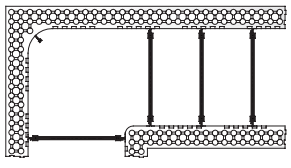 (dimensions similar)
Form Type[1]	**KD**	**KD**

1. "KD" and "P" denotes LOGIX KD (unassembled forms) and LOGIX PRO (assembled forms), respectively.

1.2 – PRODUCT SPECIFICATION TABLE CONT'D

45⁰ CORNER FORMS

	Left Hand 45° Form	Right Hand 45° Form
4 inch Concrete Core Thickness	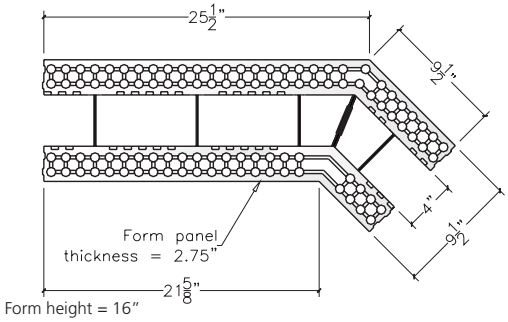	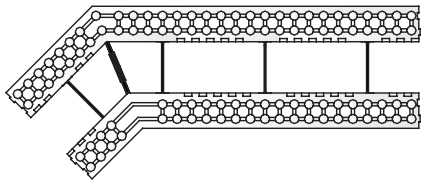
Form Type[1]	**KD/P**	**KD/P**
6.25 inch Concrete Core Thickness	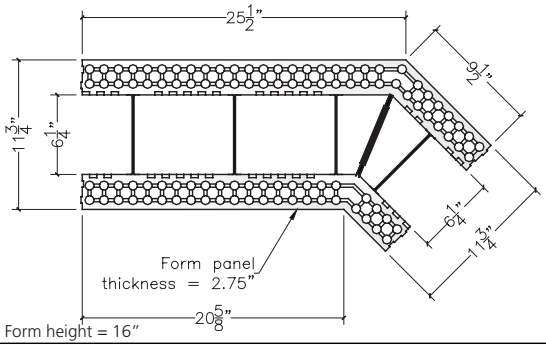	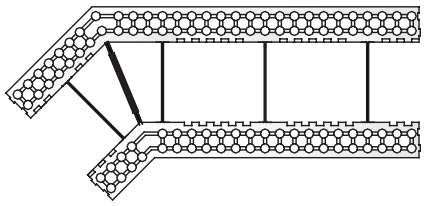
Form Type[1]	**KD/P**	**KD/P**
8 inch Concrete Core Thickness	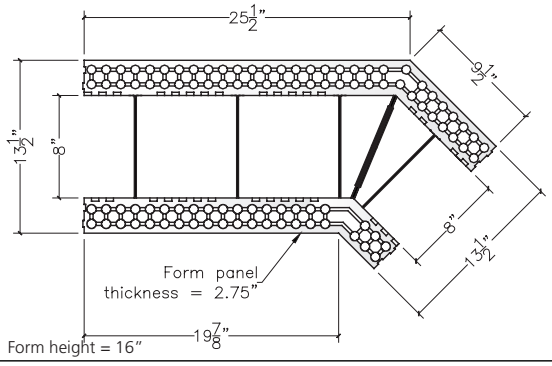	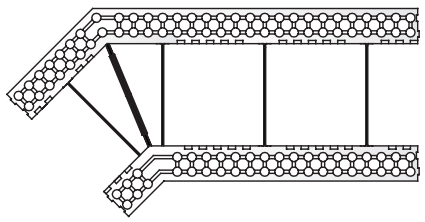
Form Type[1]	**KD/P**	**KD/P**

1. "KD" and "P" denotes LOGIX KD (unassembled forms) and LOGIX PRO (assembled forms), respectively.

HALF HEIGHT FORMS

HALF HEIGHT STANDARD FORMS[1]		
4 inch Concrete Core Thickness	6.25 inch Concrete Core Thickness	8 inch Concrete Core Thickness
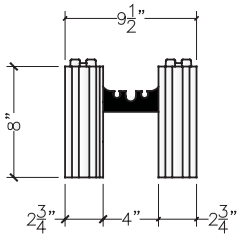	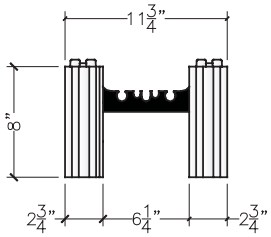	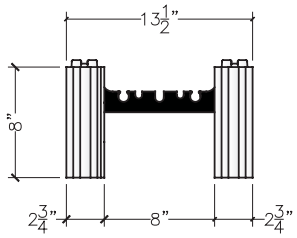

	HALF HEIGHT CORNER FORMS[1]		HALF HEIGHT 45° FORMS[1]	
	Left Hand 45° Form	Right Hand 45° Form	Left Hand 45° Form	Right Hand 45° Form
4 inch Concrete Core Thickness	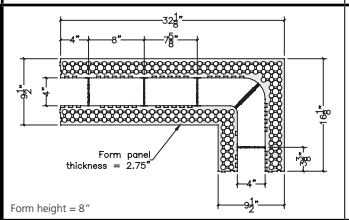	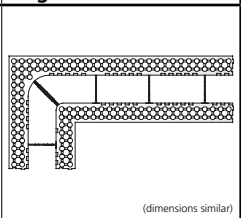	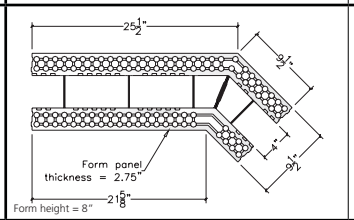	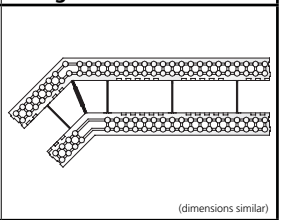
6.25 inch Concrete Core Thickness	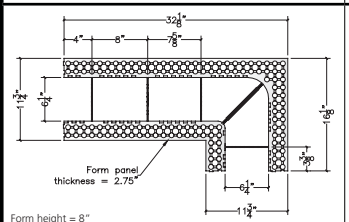	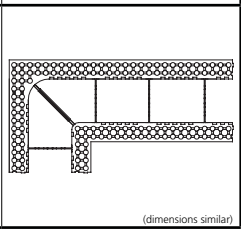	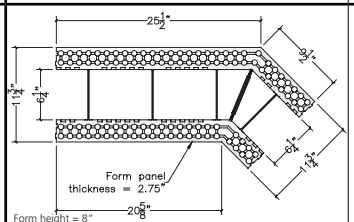	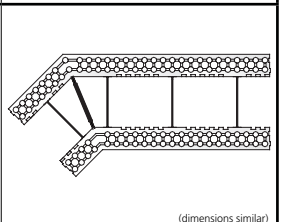
8 inch Concrete Core Thickness	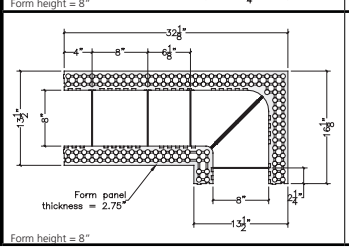	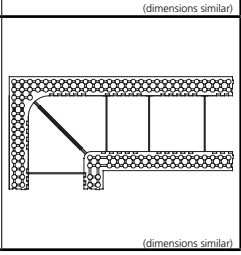	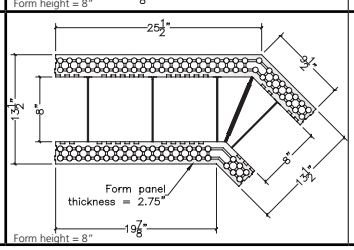	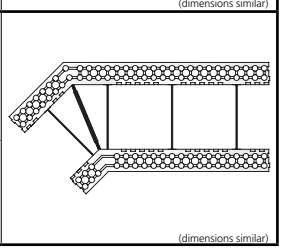

1. Height of forms for Half Height Forms = 8 inches

1.2 – PRODUCT SPECIFICATION TABLE CONT'D

ACCESSORIES

LOGIX ACCESSORIES		
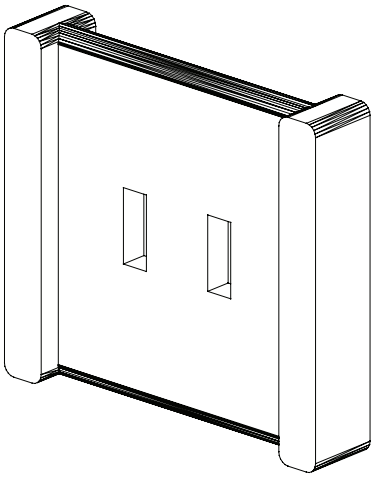	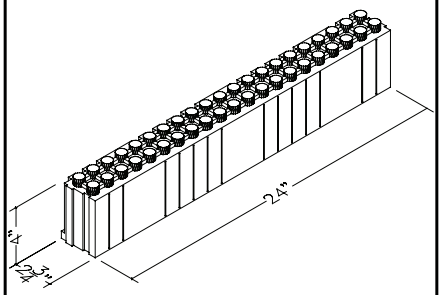	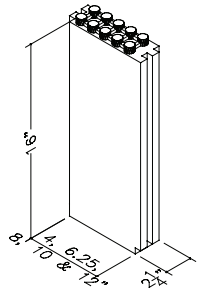
Xtender	**Height Adjuster**	**End Cap**
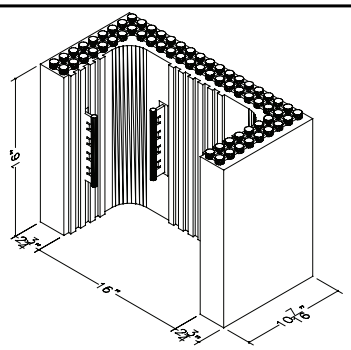	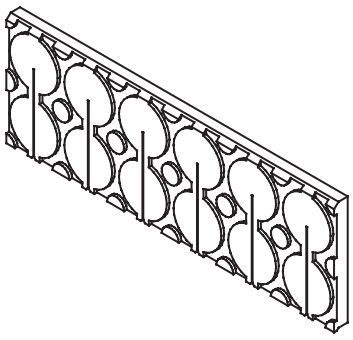	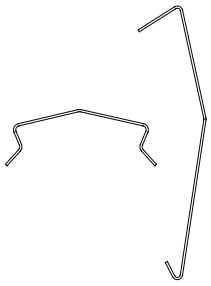
Pilaster	**D-Rv**	**Horizontal & Vertical Hooks**
	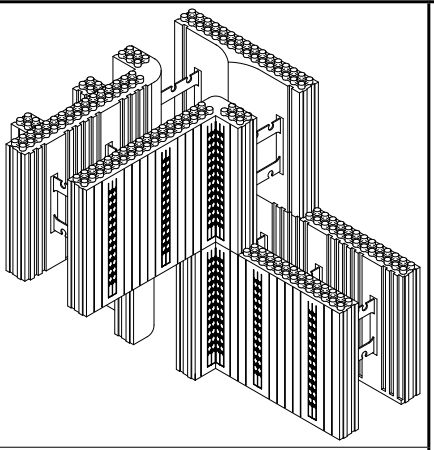	
Pro Buck	**T-Walls**	

2.0 – INSTALLATION GUIDE

TABLE OF CONTENTS

2.1 – INTRODUCTION ..... P. 2-5
2.2 – USEFUL TOOLS & MATERIALS ..... P. 2-6
2.3 – ACCURATE FOOTINGS & SLABS ..... P. 2-8
2.4 – WALL LAYOUT ..... P. 2-9
2.5 – PRODUCT HANDLING & PLACEMENT ..... P. 2-10
2.6 – JOBSITE EFFICIENCY ..... P. 2-12
2.7 – LOGIX WALL CONSTRUCTION ..... P. 2-14
2.7.1 – THE FIRST COURSE ..... P. 2-16
2.7.2 – THE SECOND COURSE ..... P. 2-18
2.7.3 – ADDITIONAL COURSES ..... P. 2-20
2.7.4 – EXTENDED BRICK LEDGE ..... P. 2-22
2.7.5 – KNOCK-DOWN FORMS ..... P. 2-25
2.7.7 – TEE WALLS ..... P. 2-28
2.7.8 – GABLE WALLS ..... P. 2-30
2.7.9 – RADIUS WALLS ..... P. 2-31
2.7.10 – LOGIX D-Rv ..... P. 2-33
2.8 – REINFORCEMENT ..... P. 2-35
2.8.1 – BASIC PRINCIPLES OF REINFORCEMENT ... P. 2-35
2.8.2 – HORIZONTAL REINFORCEMENT ..... P. 2-36
2.8.3 – VERTICAL REINFORCEMENT ..... P. 2-37
2.8.4 – LINTELS ..... P. 2-38
2.9 – WINDOW & DOOR BUCKS ..... P. 2-39
2.9.1 – LOGIX PRO BUCK ..... P. 2-40
2.9.2 – TREATED PLYWOOD BUCK ..... P. 2-44
2.9.3 – SOLID WOOD BUCK ..... P. 2-45
2.9.4 – RADIUS OPENINGS ..... P. 2-46
2.9.5 – METAL JAMBS ..... P. 2-48
2.10 – ADDITIONAL FORM SUPPORT ..... P. 2-49
2.11 – WALL BRACING & ALIGNMENT SYSTEM ..... P. 2-51

REPRINTED 2017

2.0 – INSTALLATION GUIDE

2.12 – FLOOR CONNECTIONS..... P. 2-53

2.12.1 - LEDGER WITH ANCHOR BOLTS & JOIST HANGERS ..... P. 2-53

2.12.2 – STEEL ANGLE IRON LEDGER ..... P. 2-54

2.12.3 – BRICK LEDGE FOR TOP & BOTTOM CHORD BEARING SYSTEMS..... P. 2-56

2.12.4 – LEDGER WITH SIMPSON BRACKET & JOIST HANGERS ..... P. 2-57

2.12.5 – TRANSITION LEDGE ..... P. 2-60

2.12.5.1 – TRANSITION LEDGE WITH TAPER TOP FORMS..... P. 2-61

2.12.5.2 – TRANSITION LEDGE WITH CORNER BLOCKS..... P. 2-62

2.12.6 – TAPER TOP WITH SILL PLATE..... P. 2-64

2.12.7 – CONCRETE FLOOR SYSTEMS ..... P. 2-65

2.12.7.1 – PRECAST CONCRETE FLOORS ..... P. 2-66

2.12.7.2 – HAMBRO FLOOR SYSTEM..... P. 2-67

2.12.7.3 – STEEL COMPOSITE FLOOR SYSTEM P. 2-68

2.13 – ROOF CONNECTIONS ..... P. 2-69

2.13.1 – INSET SILL PLATE ..... P. 2-70

2.13.2 – TOP MOUNTED SILL PLATE..... P. 2-71

2.14 – SERVICE PENETRATIONS..... P. 2-72

2.15 – CONCRETE PLACEMENT ..... P. 2-73

2.16 – ELECTRICAL INSTALLATIONS..... P. 2-79

2.17 – PLUMBING INSTALLATIONS ..... P. 2-80

2.18 – INTERIOR & EXTERIOR FINISHES..... P. 2-81
2.18.1 – VAPOR & AIR BARRIERS..... P. 2-81
2.18.2 – INTERIOR DRYWALL ..... P. 2-82
2.18.3 – EXTERIOR SIDING..... P. 2-84
2.18.4 – STEEL PANEL SIDING ..... P. 2-85
2.18.5 – WOOD SIDING..... P. 2-86
2.18.6 – EIFS ..... P. 2-87
2.18.7 – TRADITIONAL STUCCO (CEMENT-BASED) ..... P. 2-88
2.18.8 – CEMENT COMPOSITE SIDING ..... P. 2-88
2.18.9 – BRICK VENEER..... P. 2-89
2.18.10 – BELOW GRADE WATERPROOFING, DAMPPROOFING & PARGING..... P. 2-90
2.18.10.1 – BELOW GRADE WATERPROOFING P. 2-91
2.18.10.2 – ABOVE GRADE PARGING..... P. 2-93
2.18.11 – ATTACHING FIXTURES ..... P. 2-94
2.18.12 – HOLDING POWER OF SCREWS FASTENED TO Logix FURRING TABS..... P. 2-97
2.19 – RADIUS WALLS ..... P. 2-98
2.20 – TALL WALLS ..... P. 2-107
2.21 – SUPPORTING PRODUCTS..... P. 2-109

2.1 – INTRODUCTION

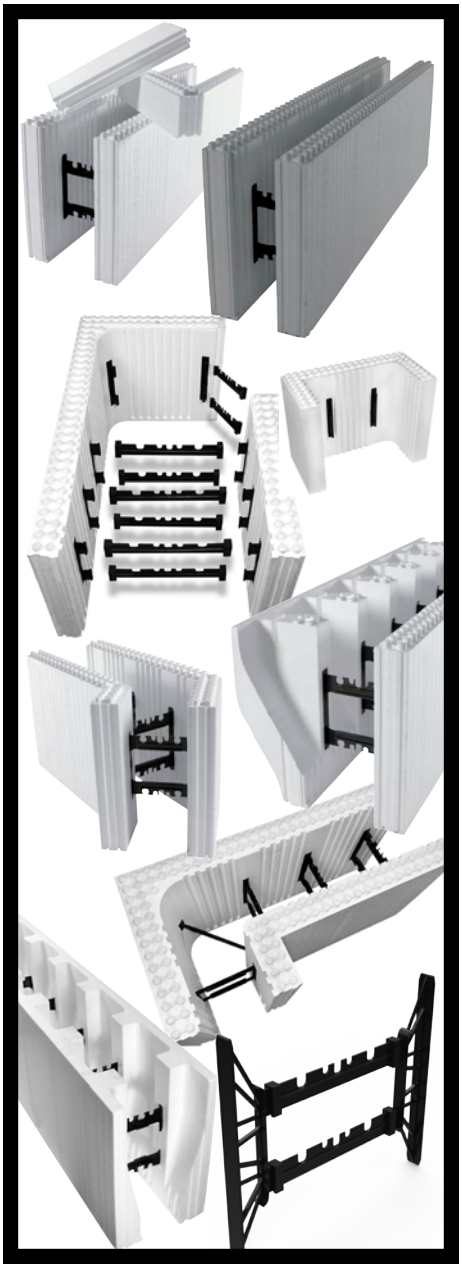

For builders who want a competitive edge, Logix offers solid products and friendly local service. Our products are designed to perform better in the field, providing trouble-free, profitable installations time after time. Our technical team is ready to respond to your queries with practical advice on quick and efficient installation. With contractor training provided through our numerous regional technical support offices, help is always close at hand. We are the most experienced ICF manufacturers in North America, manufacturing top quality products at our nine plants located throughout the United States and Canada.

For more information, or to contact a Logix representative, visit our website at www.Logixicf.com and click "Contact Us". You can also register online to receive Logix updates.

This manual will be updated regularly. Current updates will be available at www.Logixicf.com.

You can count on Logix. The ICF wall system that's built to last.

2.2 – USEFUL TOOLS & MATERIALS





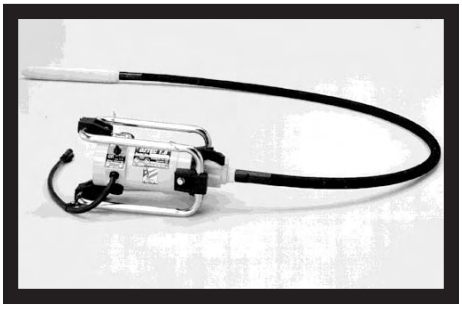

- Pruning saw
- Cordless drill
- Screws
- Hot knife
- Electric chainsaw
- Fiberglass-reinforced tape
- Step ladder
- Rebar bender/cutter
- Internal vibrator
- Contractor-grade foam gun
- Low expansion foam adhesive
- Approved scaffold planks
- Transit or laser
- 48” (1220mm) level
- Bolt cutters
- String line

2.2 – USEFUL TOOLS & MATERIALS

CONTINUED





- Chalk line
- Wall alignment system (safety compliant)
- 36 inch (914 mm) plastic zip ties, or Logix Vertical & Horizontal Hooks
- Concrete embedments
- Window and door buck material
- Sleeves for wall penetrations

NOTE: For more information on Logix Vertical & Horizontal Hooks see Technical Bulletin No.20

2.3 – ACCURATE FOOTINGS & SLABS

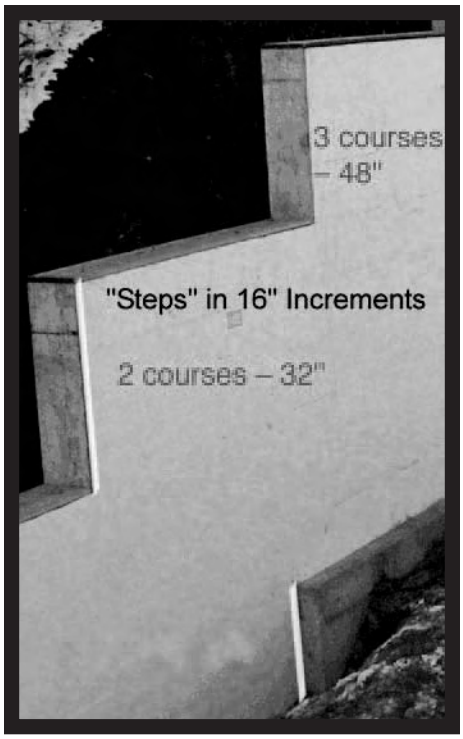

The first step to a successful Logix installation is an accurate footing or slab. This means a footing or slab that is:

- Code compliant
- Designed in accordance with construction drawings and specifications
- Designed taking into account soil conditions, seismic area, number of stories, building loads, and water tables.

see section 6.0 – Engineering

STEP 1: Level footings with +/-1/4 inch (+/-6 mm).

STEP 2: Place footing dowels or keyways as required per plan specification or local building codes.

STEP 3: Once footing dowels are installed, cap all dowels for safety compliance.

The ideal increment for step footing is 16 inches (406 mm). Using Logix Half-height forms, or Height Adjusters, it is possible to achieve 8 inch (203 mm) or 4 inch (102 mm) footing increments, respectively.

2.4 – WALL LAYOUT



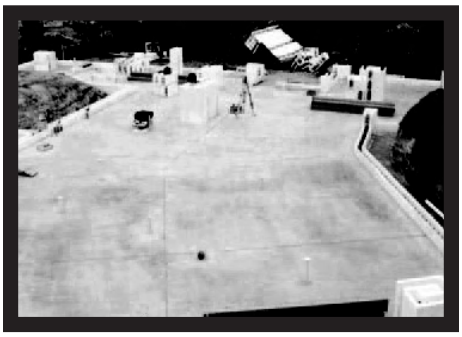

Accurate wall layout is critical to ensure a complete and profitable Logix project.

STEP 1: Verify that wall layout is in accordance with plans and specifications.

STEP 2: To ensure accurate 90° corners, use methods such as:

- Equal diagonal measurements
- 3-4-5 triangle
- Surveying

STEP 3: To ensure accurate 45° corners, use Logix 45° corner form units.

STEP 4: Snap chalk lines on footings or slab according to plan.

STEP 5: Make sure the outside face of the forms line up with the overall building dimensions.

Wall layout of radius or other corner angles is easily achieved with Logix.

2.5 – PRODUCT HANDLING & PLACEMENT



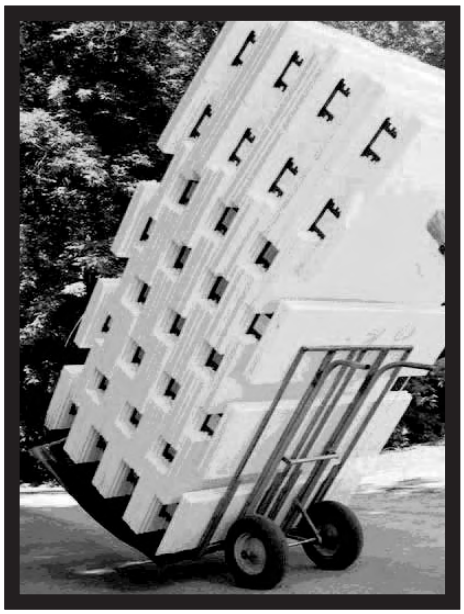

There are several methods to efficiently handle Logix forms. Unlike most ICF systems, the consistent 2-3/4 inch (70 mm) panel thickness on Logix forms means that handling damage is minimized.

- Logix Standard Forms arrive stacked on disposable skids.
- The forms are strapped together for easy handling.
- Unloading can be accomplished manually or using alternate lifting equipment.
- Standard forms can be moved by two people using two 2x4s
- Corner forms come in bundles of four or twelve, and can easily be carried by one or two people.
- Specialized dollies are another convenient way to move Logix bundles.
- When transporting forms on an open trailer, position the forms so the wind travels through the webs to minimize drag.
- When tying forms down on an open trailer, ensure the forms are well secured and avoid form damage from strapping materials.
- If job site conditions require form protection, Logix bundle bags can be ordered.
- Logix forms are produced to the tightest tolerance in



the industry, with a length tolerance of +/-1/8 inch (+/-3 mm), and a height tolerance of +/-1/16 inch (+/-2 mm).

When forms are unloaded, it is necessary to measure forms to determine uniform length and height. It is suggested to measure 2 forms per skid. In the unlikely event that forms are out of spec, please contact the local Logix representative immediately.

2.6 – JOBSITE EFFICIENCY





An efficient jobsite means a faster and safer installation, and ultimately a higher quality finished project.

- Keep all materials and tools outside of the footing area until the chalk lines have been snapped and the wall layout is complete. Generally, construction is accomplished from within the perimeter of the structure.

- When wall layout is complete, place forms at least 7 feet (2.134 m) inside the perimeter of the footings or slab to accommodate the wall alignment system.

- Space skids of standard forms around the inside of the entire perimeter.

ALERT: When placing courses of forms, always take forms from the closest skid. This will eliminate the effects of normal manufacturing variations between skids.

- Periodic checking of dimensions ensures accurate wall construction.

2.6 – JOBSITE EFFICIENCY

CONTINUED

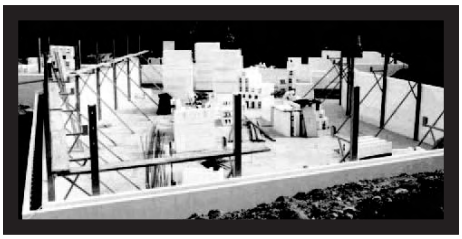

- Additional materials that should be located within the perimeter:
    - Window and door bucks
    - Rebar (straight or pre-bent)
    - Alignment system
    - Approved scaffold planks
    - Tools

2.7 – LOGIX WALL CONSTRUCTION

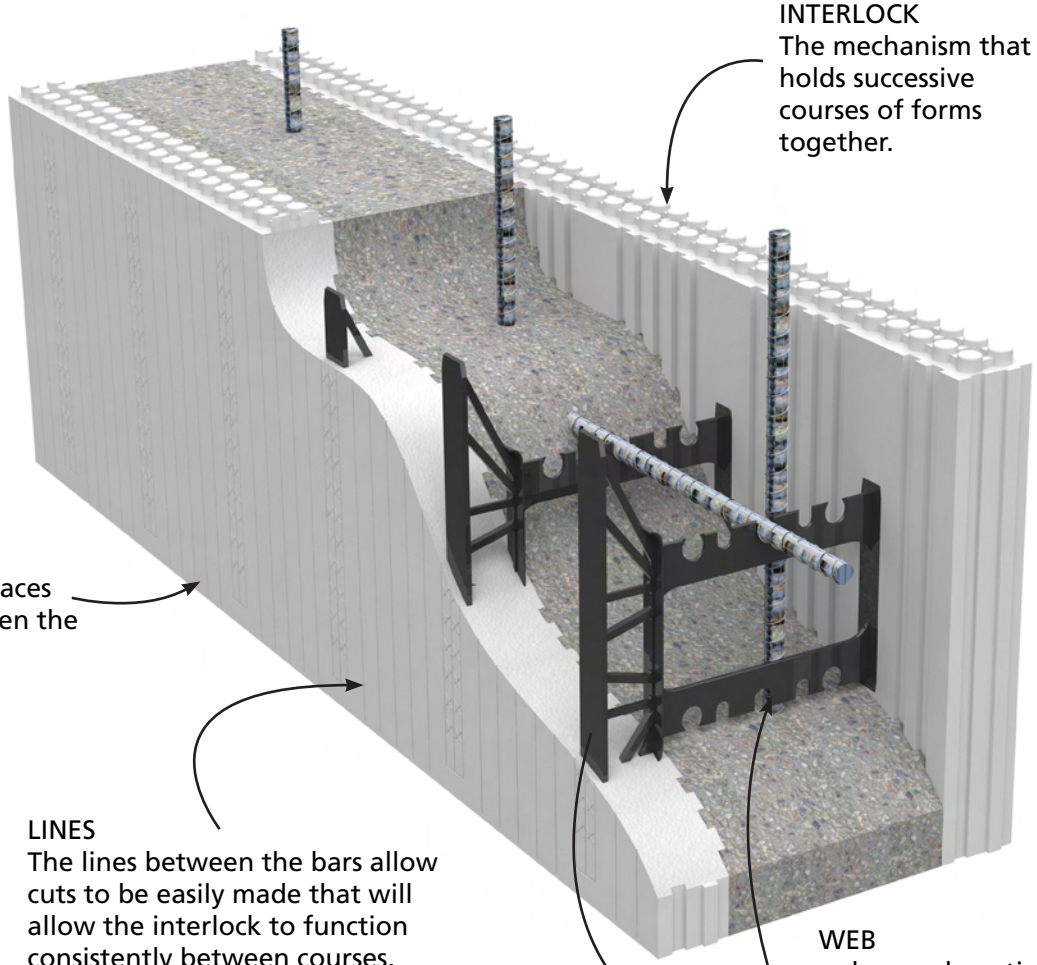

INTERLOCK
The mechanism that holds successive courses of forms together.

BARS
The spaces between the lines.

LINES
The lines between the bars allow cuts to be easily made that will allow the interlock to function consistently between courses. Cuts should always be made straight and square on the lines. Cutting anywhere but along these marks will create a stacked vertical joint.

WEB
polypropylene ties that holds the form unit together. The web also acts as the placement mechanism for reinforcing steel and the attachment surface for finish materials. There are six webs in each form unit.

REPRINTED 2017
Rev. Dec 10/16

2.7 – LOGIX WALL CONSTRUCTION

CONTINUED

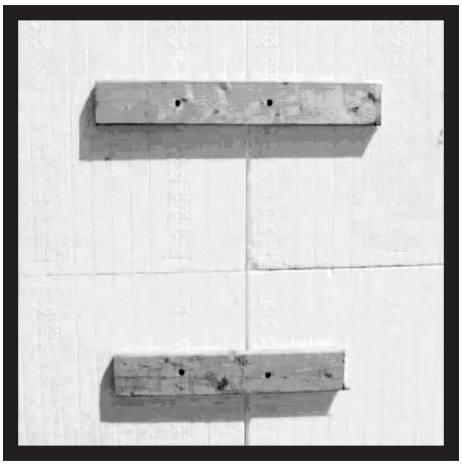

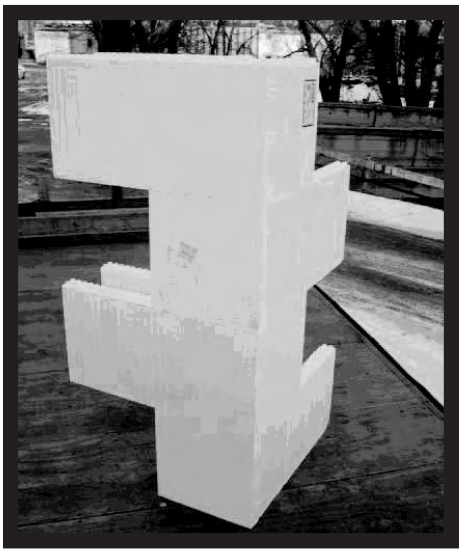

When a form is cut, it can be identified using bars and webs. For example, a cut form with three bars, two webs, and three bars will be referred to as a "3-2-3".

By establishing a logical form pattern that takes into account the building dimensions, maximum efficiency will be achieved. It is important that the building dimensions have a tolerance of +/-1/2" inch (13 mm) or a stacked vertical joint will result. Such joints are acceptable if dimensions necessitate but will require additional form support on both sides of the form.

When building dimensions are based on 4 feet (1.219 m) increments, it is suggested to alternate between left and right hand corners within each course.

2.7.1 – THE FIRST COURSE



STEP 1: Always place forms units with protruding interlock facing up.

STEP 2: Begin at a corner. Set corner block to chalk line.

STEP 3: Continue placing forms along the chalk line.

STEP 4: Secure forms ene-to-end in the first course to maintain building dimensions.

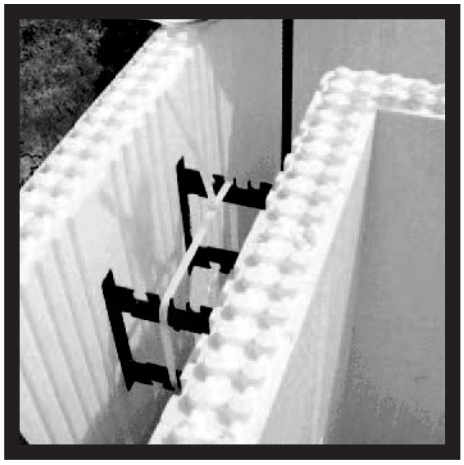

STEP 5: When the forms are within 4 feet (1.219 m) or less of the second corner, place the second corner form.

STEP 6: Cut a standard form to fit the space left between the corner and the previous form. At this point, determine if adjustments are needed to the building dimensions so the cut can be made on a line.

If adjustments are needed, alter chalk lines accordingly.



If more than 3 bars are extending beyond any web, additional form support is required on both faces of the form.

2.7.1 – THE FIRST COURSE

CONTINUED



STEP 7: Continue around the wall in this manner until the first course is complete and dimensions are verified.

Leave the first course of forms in place across door openings and low windows until forms have been placed and building dimensions have been verified to maintain the interlock pattern above openings.

STEP 8: Place necessary rebar in first course as specified and according to local code.

STEP 9: Prior to starting the second course, install additional form support if required.

2.7.2 – THE SECOND COURSE



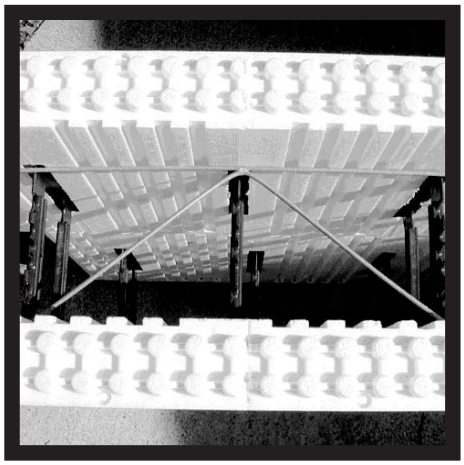



STEP 1: Starting at the original corner, place appropriate corner form to create a 16" (406mm) offset.

STEP 2: Fasten every corner end-to-end to adjoining forms using zip ties, Logix Hooks, or adhesive foam.

STEP 3: Continue placing forms around the wall, working in the same direction as first course.

STEP 4: It is necessary to seat every form to the form below to minimize interlock settling during concrete placement.

STEP 5: All webs should line up vertically, except where building dimensions are other than 8 inch (203 mm) increments.

STEP 6: After completion of second course, place necessary rebar as specified and according to local code.

Form Lock can also be placed in the second course, if desired. Overlap Form Lock lengths by roughly 8 inch (203 mm). Align the points of the zigzag pattern in the Form Lock directly above the webs.

STEP 7: Confirm that the wall is straight and level. If adjustment is required, shim or trim the bottom of the wall until level is achieved.

2.7.2 – THE SECOND COURSE

CONTINUED





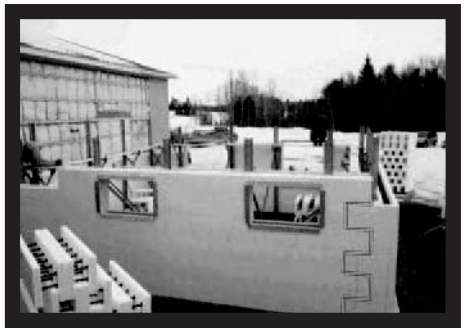

STEP 8: Use foam adhesive to fasten the straightened and levelled wall to the footing or slab. Insert the nozzle 1 inch (25 mm) at the base of every other web along the chalk line and inject foam between the block and the footing.

When vertical joints are less than 8 inches (203 mm) apart, additional form support is required.

It is important to note that at this point the wall pattern has been established. Course number 1 will be the pattern for all odd numbered courses (3, 5, 7, etc.). Course number 2 will be the pattern for all even numbered courses.

Wall alignment system to be installed at some point between the second and fourth courses, at no more than 7 feet (2.134 m) intervals. See **Section 2.11 - Wall Bracing & Alignment System** for further details.

2.7.3 – ADDITIONAL COURSES



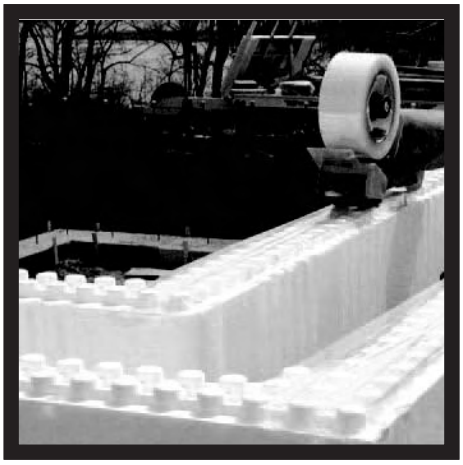



STEP 1: Fasten every corner end-to-end to adjoining forms using zip ties, Logix Hooks, or adhesive foam.

Install Form Lock, if desired, every fourth of fifth course after the second course.

STEP 3: After completion of each course, place necessary rebar as specified and according to local code.

STEP 4: Secure forms end-to-end in the top course to maintain building dimensions.

STEP 5: Secure top course to the forms below on both sides to prevent tipping during concrete placement.

STEP 6: If additional stories are planned, the interlock needs to be protected prior to concrete placement.

STEP 7: Check building dimensions. Check corners for plumb.

STEP 8: Ensure straight walls by placing a string line at the top course set off from the wall using 3/4 inch (19 mm) pieces of wood placed in the corners. Check for straightness by running another 3/4 inch (19 mm) piece of wood between the string and wall.

2.7.3 – ADDITIONAL COURSES

CONTINUED

When vertical joints are less than 8 inches (203 mm) apart additional form support is required.

If you need to stack identical corners in subsequent courses, you will need to provide additional form support where the stacked joints are created.

Hold all reinforcement back 2 inches (51 mm) from door and window buck material to ensure proper concrete coverage.

2.7.4 – EXTENDED BRICK LEDGE

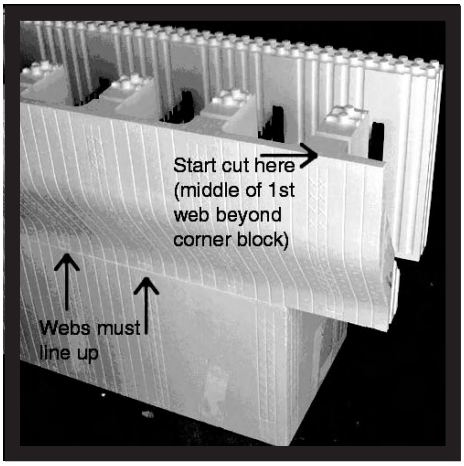

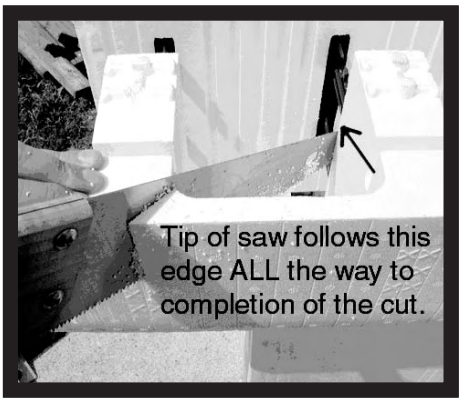

Brick Ledge forms come only in straight units, so mitered cuts on site must be made to create corners with these blocks. Two methods can be used:

1. Freehand miter cutting.
2. Using a template.

On a 6.25 inch (159 mm) Logix Brick Ledge always start a miter cut in the middle of the first web beyond the corner form.

When making any miter cut in a Brick Ledge form to create a 90° corner always angle the saw and make sure you follow this edge during the ENTIRE course of making the cut.

Extending a Brick Ledge block two webs beyond the corner block and making the cut will create a remaining piece that can be used for an inside corner elsewhere in the layout.

STEP 1: The first portion of the cut is vertical, then angle to the tip of the corner block below, always keeping the tip of the saw following the inside edge.

STEP 2: After making the miter cut, cut the far side of the block so it is flush with the inside edge of the corner form.

2.7.4 – EXTENDED BRICK LEDGE

CONTINUED

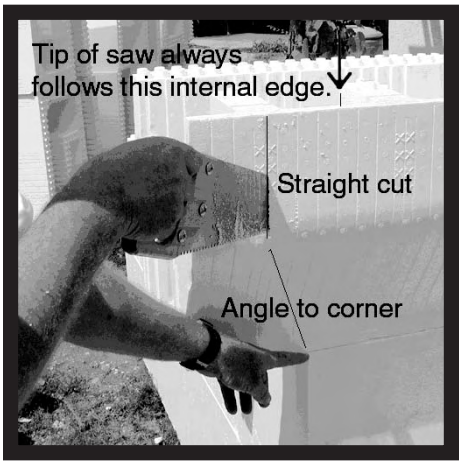

STEP 3: Place the second Brick Ledge in place to cut on the opposing side of the corner.

STEP 4: Cut the second Brick Ledge miter in a manner similar to the first miter.

When cutting the inside panel of the second mitered block, make the cut so it butts against the opposing panel.

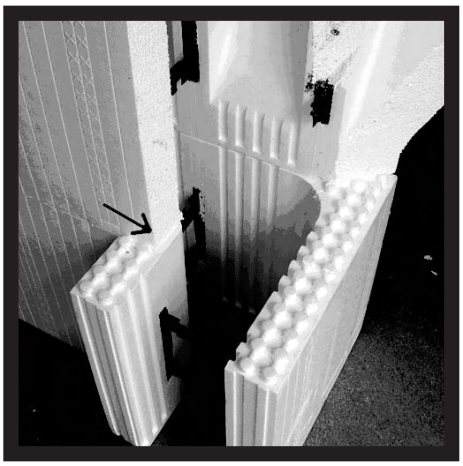

STEP 5: Securely tape and foam the mitered corner, applying several rows of tape.

STEP 6: Install rebar in the Brick Ledge, making sure to install two 90° pieces extending 2 feet (0.610 m) in either direction.

Butt joints are preferred for rebar in outer edge of Brick Ledge.



STEP 7: Install long stirrups in each brick ledge cavity, including the every corner. See next page for stirrup details.

2.7.4 – EXTENDED BRICK LEDGE

CONTINUED

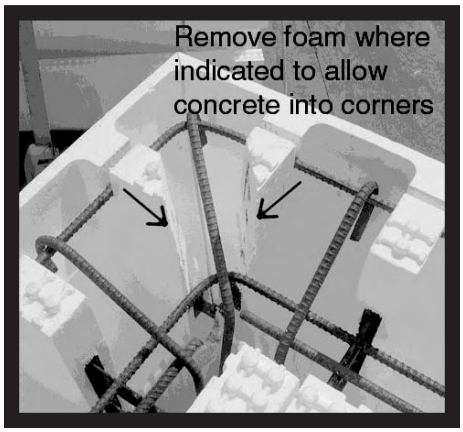

STEP 8: Remove foam from the corner cavity area to facilitate the flow of concrete into the corner cavity.

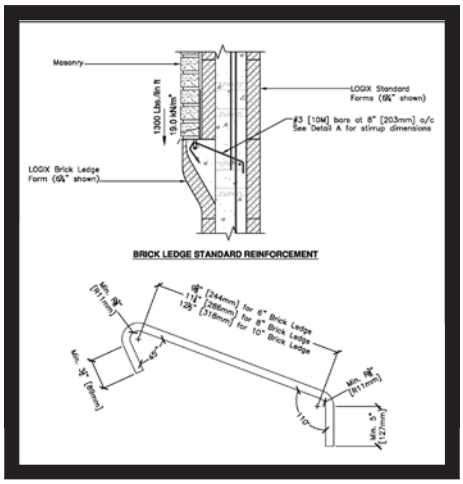

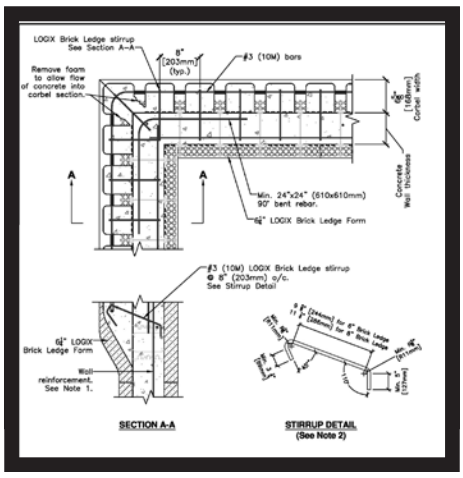

2.7.5 – KNOCK-DOWN FORMS

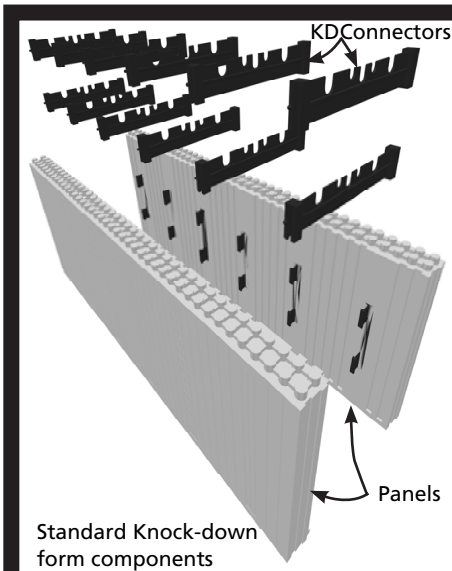

Standard Knock-down form components

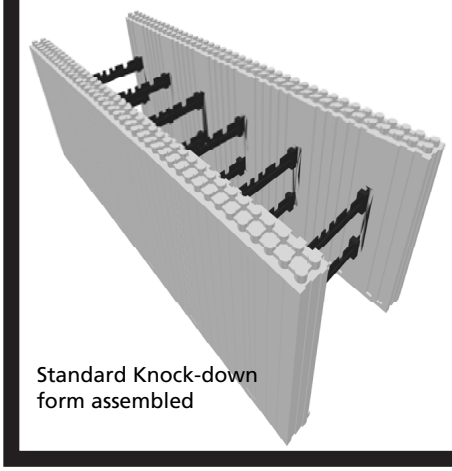
Standard Knock-down form assembled

Logix Knock-down forms (Logix KD) are designed to offer the same benefits as the Logix solid forms (Logix PRO). However, Logix KD forms also

- reduce shipping costs and inventory requirements
- accommodates tilt-up wall panel construction
- allows hassle-free assembly of forms around complex rebar patterns (i.e. stirrup or rebar cage pattern in walls)
- allows custom block configurations (i.e. Taper Top-Brick Ledge, etc…)

PRODUCT DESCRIPTION

Logix KD forms consists of two expanded polystyrene (EPS) foam panels measuring 16 inches (406 mm) tall x 48 inches (1220 mm) wide x 2.75 inches (70 mm) thick. The panels are connected using KD Connectors, snap-in polypropylene ties spaced 8 inches (203 mm) on center to form the ICF. The KD Connectors are available in varying sizes that create 6.25, 8, 10 and 12 inch (159, 203, 254 and 305 mm) thick concrete walls. Corner panels are also available.

2.7.5 – KNOCKDOWN FORMS

CONTINUED

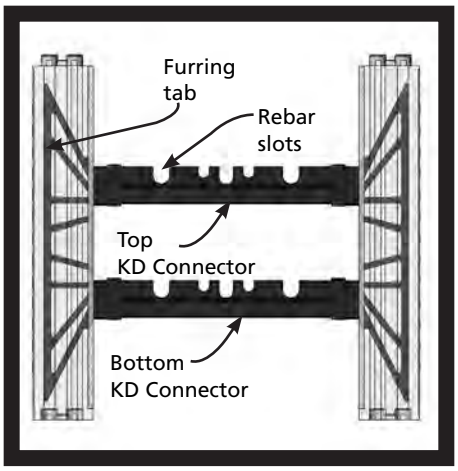

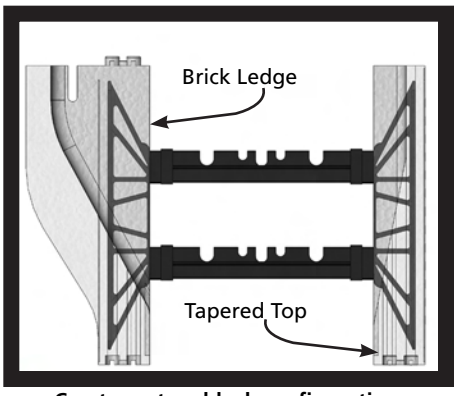

Create custom block configurations with Logix KD forms

INSTALLATION GUIDE

PRODUCT HANDLING

There are several methods to efficiently handle Logix KD forms. The high foam density and consistent 2-3/4 inch (70 mm) panel thickness on Logix KD means that handling damage is minimized.

The forms arrive on-site unassembled. KD Connectors and panels arrive on-site packaged in boxes and bundled in stacks, respectively.

ASSEMBLING AND INSTALLATION

The KD Connectors connect to the polypropylene furring tabs embedded in the form panels. The furring tabs are spaced at 8 inches (203 mm) on center and act as solid attachment areas for drywall, cladding and other wall attachments. A top and bottom KD Connector is required for each furring tab.

To assemble the forms simply snap into place the top and bottom KD Connectors with the rebar slots facing upwards. This will accommodate two layers of rebar.

As the forms are assembled on-site they are stacked in place to form the walls. Stacking the blocks, including required tools, are the same when using Logix Pro forms.

In addition, Logix recommends the following:

- Use foam adhesive, 2x4s, steel stud angles or other system that will keep the first course in place and properly aligned during the initial concrete pour.
- Zip tie adjacent forms at the fixed ends of the ties.
- Install bracing every 6 ft.
- Provide additional form support at corners of 12” Logix KD forms.

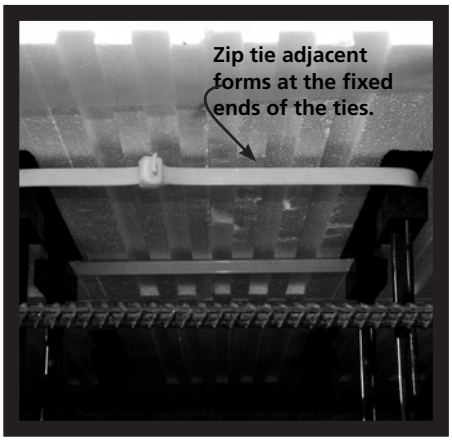

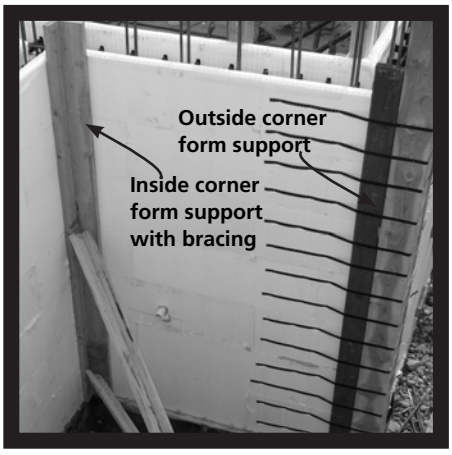

CORNER FORM SUPPORT

For any type of ICF knock-down system it is good practice to provide additional form support at the corners for Logix KD forms.

To ensure a safe and proper concrete pour the following corner form support is recommended:

- Using 2.5 inch (64 mm) wood screws to fasten 2x6 vertically to the embedded furring tabs on both sides of the corner.
- For outside corners wrap steel strapping around the corners. For the bottom third of the concrete pour height evenly space two strappings for each course. Then one strap per course for the remaining pour height. Using 1.5 inch (38 mm) wood screws the bands should attach to at least two furring tabs that extend beyond the 2x6 on both sides of the corner.
- For inside corners apply typical bracing as required.

2.7.7 – TEE WALLS

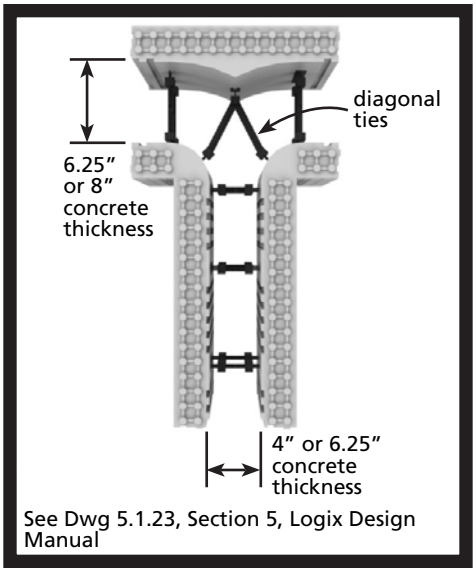

See Dwg 5.1.23, Section 5, Logix Design Manual

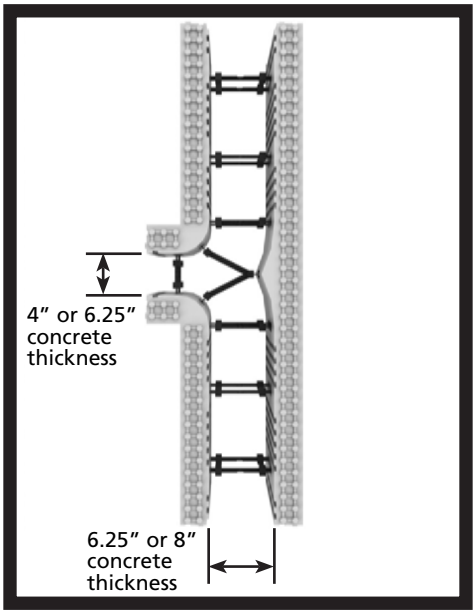

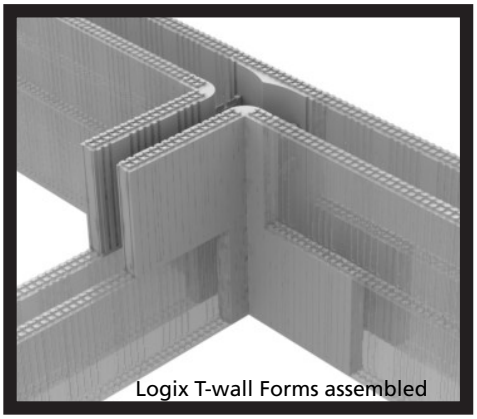
Logix T-wall Forms assembled

Wall T-junctions can be constructed using Logix T-walls, or by field-cutting Logix Standard forms.

Logix T-WALLS

Logix T-walls arrive to the job site assembled or disassembled.

When assembled Logix T-walls provide sizes that are commonly used in construction.

Logix T-wall Sizes	Description
4 to 6	4" connected to 6.25" Logix
4 to 8	4" connected to 8" Logix
4 to 10	4" connected to 10" Logix*
4 to 12	4" connected to 12" Logix*
6 to 6	6.25" connected to 6.25" Logix
6 to 8	6.25" connected to 8" Logix
6 to 10	6.25" connected to 10" Logix*
6 to 12	6.25" connected to 12" Logix*

*Assembled without diagonal ties

Each T-wall size comes in two different shapes so that a running bond pattern is created when the T-wall forms are stacked.

Installation of Logix T-walls is straightforward. As with all Logix forms, the T-walls are stacked in the usual running bond pattern, and follows the same basic installation instructions detailed in Section 2 of the Logix Design Manual.

FIELD-CUT T-WALLS

Each course of the through wall must have continuous horizontal bar or a minimum of 3 feet (0.914 m) length of rebar at proposed Tee. A pre-bent 90° rebar is required at every course of rebar.

2.7.7 – TEE WALLS

CONTINUED

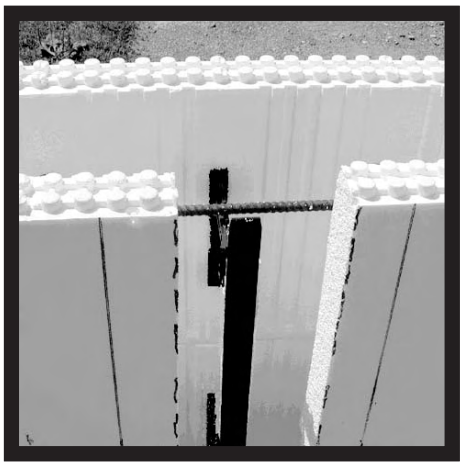

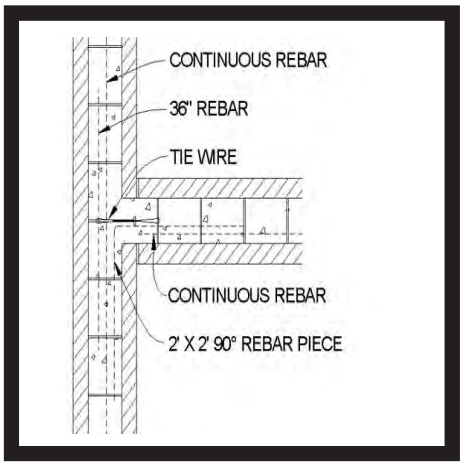

For full size CAD drawing see Section 5, CAD Drawings

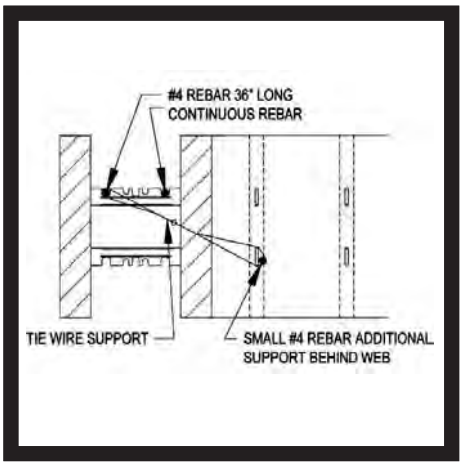

For full size CAD drawing see Section 5, CAD Drawings

STEP 1: Complete the first course of the "Through" (continuous) wall.

STEP 2: Use a felt-tip marker to mark the through wall where the Tee wall will butt against it.

STEP 3: Remove the foam from the Through wall where the Tee intersects, to the thickness of the concrete core.

STEP 4: Butt the first course of the Tee up against the Through wall.

STEP 5: Tie the first Tee wall web to the Through wall rebar using a zip tie or tie wire. A short length of rebar should be placed behind the face of the web that is being tied to stiffen it.

STEP 6: Additional exterior form support should be installed as required at every course.

STEP 7: Continue building the walls, following these steps at every course.

STEP 8: When the entire wall has been checked for plumb and square, apply foam adhesive to the entire butt joint.

Another option for building a Tee wall is to construct the entire Through wall first. This method requires pre-planning to ensure there is a adequate reinforcements at every course to allow the Tee wall to be attached securely. All other steps above need to be applied.

2.7.8 – GABLE WALLS

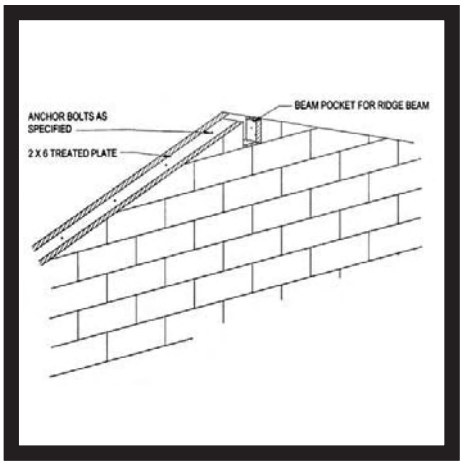



The preferred method to construct a gable end is on the floor to be installed as a one-piece unit.

STEP 1: Construct the gable wall, including any necessary rebar. Connect forms together with zip ties and foam adhesive. To minimize waste, be cautious when foaming outside the gable dimensions.

STEP 2: Snap a chalk line for the sloped gable cuts and make the cuts with a pruning, reciprocating or other type of saw. Screw 1x4s along the cuts on both sides of the wall.

STEP 3: Ensure that appropriate wall alignments and scaffolding system is in place for safe installation.

STEP 4: Using appropriate lifting equipment, place the sloped gable wall in place on the squared wall.

STEP 5: Pieces of plywood can be screwed into the 1x4s during placement to help contain the concrete.

STEP 6: Make sure all necessary roof attachment hardware is available prior to concrete placement, as it must be installed during or immediately after the pour.

Another option for constructing a gable wall is to assemble the gable in place. Set the pitch for the gable by marking the first course appropriately. Subsequent courses should follow this pattern.

2.7.9 – RADIUS WALLS

There are a number of different methods for creating radius walls with Logix. Below, is a guide that will create radius walls based on 8 inch segments of Logix.

STEP 1: Cut forms into 8 inch (203 mm) increments with web in center of each section.

STEP 2: Mark the inside and outside diameter of the curved wall on the footing or slab.

STEP 3: From the center of the circle, snap a radius line to the outside diameter line. This becomes your center radius for the next step.

STEP 4: On the outside diameter line, snap a radius line 4" (102mm) on each side of the center radius.

STEP 5: Set on of the 8 inch (203 mm) form sections, centering the web on the center radius. Line up the outside corners of the form section with the outside radius lines.

STEP 6: Mark the form section at the outside radius lines, and cut angles accordingly.

STEP 7: This form section now becomes a template, form which you can cut the other sections. Mark and cut all form section accordingly.

2.7.9 – RADIUS WALLS

CONTINUED

STEP 8: Zip ties, tape, or foam can now be used to connect all the form section into the wall. Repeat the steps for each course of radius wall.

STEP 9: This process will result in vertically stacked joints, and additional form support will be required prior to concrete placement.

See **Section 2.19, Radius Walls,** for radius wall tables.

2.7.10 – LOGIX D-Rv

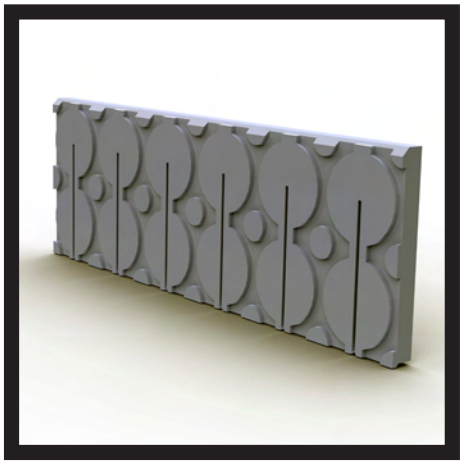



Logix D-Rv™ are 2 inch thick foam panels made with a drainage layer. It provides a quick and easy alternative to providing drainage with the added benefit of increasing the R-value of a Logix wall assembly.

(The drainage layer may be required, either by code or design, when a direct applied finish, such as stucco, is used on an exterior ICF wall.

Installation of Logix D-Rv™ is straight forward. Logix D-Rv™ snap and lock into place within the Logix form blocks without the need for fasteners or adhesives.

Logix D-Rv™ can be installed into the Logix form blocks either before or while the form blocks are stacked to build the wall. This speeds up the construction process and eliminates the need to apply the drain layer to the exterior face after a Logix wall has been built.

STEP 1: As the Logix form blocks are stacked insert the D-Rv panels with the drain layer against the form panels. The slots in the D-Rv™ panels accomodate the web ties.

STEP 2: Align the slots in the D-Rv™ panel with the web ties and push the D-Rv™ panel until it snaps and locks into place.

Offsetting the vertical joints of the D-Rv™ panels with the vertical joints of the the Logix forms will create a stronger, more rigid wall structure.

For more information contact your local Logix

2.7.10 – LOGIX D-Rv

CONTINUED

representative or see Technical Bulletin No. 36, Logix D-Rv™ in the Logix Technical Library.

2.8 – REINFORCEMENT
2.8.1 – BASIC PRINCIPLES OF REINFORCEMENT





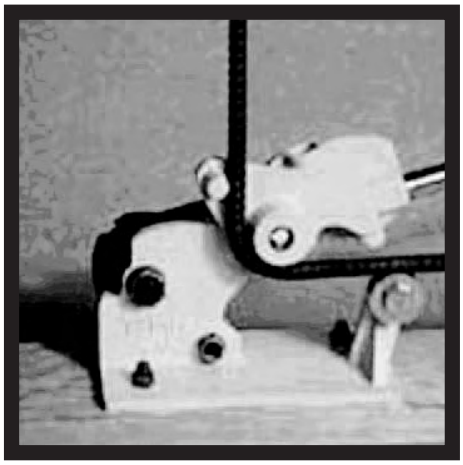

Reinforcing steel (rebar) strengthens concrete walls to help minimize cracking and buckling under load due to backfill, wind, and other loads. Rebar also helps control cracking due to temperature swings and shrinkage.

A non-contact splice is typically the splice of choice in Logix walls except in heavily reinforced walls or in cases of narrow wall cavities.

Reinforcement around windows and doors needs to be installed as required.

Reinforcing steel must meet the requirements of ASTM A615, ASTM A996, or ASTM A706 for low-alloy steel. Minimum of Grade 40 (300MPa).

Reinforcing steel in a Logix wall must have minimum 3/4 inch (19 mm) concrete cover.

see section 6.0 – Engineering

Refer to Logix Design Manual for reinforcing tables or refer to EB118.

It is the responsibility of the installer to verify table rebar specifications with local building codes and engineer specs.

2.8.2 – HORIZONTAL REINFORCEMENT





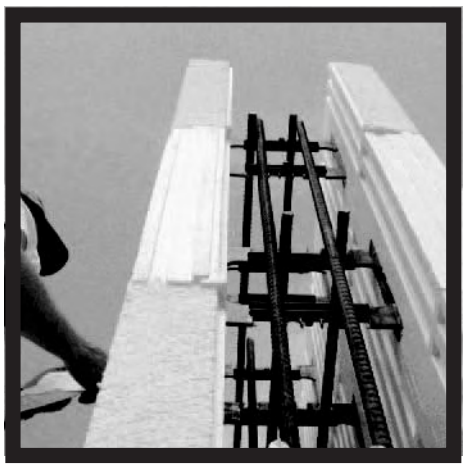

STEP 1: Horizontal rebar, sized as required, should be placed in the wall as each course is installed.

STEP 2: Hold the reinforcement back from door and window openings by 2" (51mm).

STEP 3: Maintain the proper overlap splice length of 40d (40 x bar diameter) or 24 inch lap length, whichever is greater, or as otherwise specified when placing horizontal rebar. A non-contact lap splice is recommended.

STEP 4: The notch pattern on the Logix web allows for horizontal rebar to be alternated in location, course by course. This allows ideal support and positioning for vertical steel. Vertical rebar diameter will dictate horizontal offset from course to course.

2.8.3 – VERTICAL REINFORCEMENT







STEP 1: Install vertical rebar, as required, after all courses and horizontal reinforcement have been placed.

STEP 2: Place vertical reinforcement under windows, if required.

STEP 3: Place vertical rebar on each side of every opening as required.

see section 6.0 – Engineering

STEP 4: Cold joints between upper floor walls and lower floor walls need to be reinforced with a lap length of 40d or 24 inch (610 mm) lap length, whichever is greater (unless otherwise specified).

It is the responsibility of the installer to verify table rebar specifications to comply with local building codes and engineer specs.

2.8.4 – LINTELS

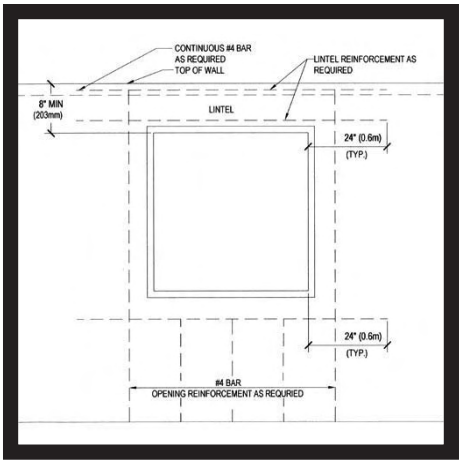

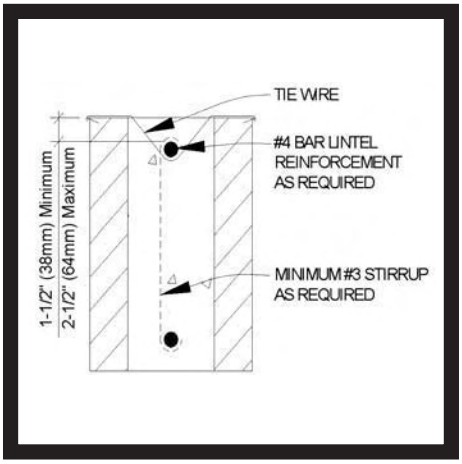

For more lintel reinforcement details see Section 6.0 Engineering.

Appropriate lintel rebar should be placed in the proper sequence directly above doors and windows to carry loads over these openings.

STEP 1: Before placing forms across the top of door or window openings, rest the bottom lintel bar on buck material. This provides easier access to rebar for fast lintel steel installs. Check to make sure the bottom lintel steel has enough clearance. It should be 1-1/2 to 2-1/2 inches (38 to 64 mm) from buck material.

STEP 2: Install a course of forms across the top of the buck.

STEP 3: Install Form Lock across the entire length of the course. In some cases it may be require to install top lintel rebar before installing Form Lock, in order to achieve necessary concrete cover.

STEP 4: Suspend the top lintel rebar 1-1/2 to 2-1/2 inches (38 to 64 mm) below the top of the form.

STEP 5: Use stirrups to hang the bottom lintel rebar from the top steel, making sure the bottom rebar is 1-1/2 to 2-1/2 inches (38 to 64 mm) above the buck material.

Consistent stirrup dimensions will maximize efficiency.

The top and bottom lintel rebar must extend 24 inches (610mm) beyond both sides of window and door opening.

2.9 – WINDOW & DOOR BUCKS







For more CAD drawings
see Section 5.9 CAD Drawings.

Bucks provide attachment surfaces for windows and doors while holding back concrete from these openings during concrete placement. Mark the center and edges of openings as you place courses and cut blocks as needed.

Refer to the rough opening (R/O) dimensions for windows and doors. Provide for openings in the wall taking into consideration the thickness of the chosen buck material. See window and door manufacturer info for R/O dimensions.

Cross bracing is required for all window and door bucks approximately 18 inches (457 mm) on center to help withstand the pressures of concrete placement.

Window and door openings within 4 feet (1.220 m) of corners require additional horizontal strapping from corner to across the opening.

Prior to placing window or door buck, confirm that bottom lintel rebar has been installed.

Bucks can be made from EPS foam, lumber or vinyl. Logix Pro Buck, made of dense EPS foam, is recommended for use with Logix ICF.

2.9.1 – LOGIX PRO BUCK

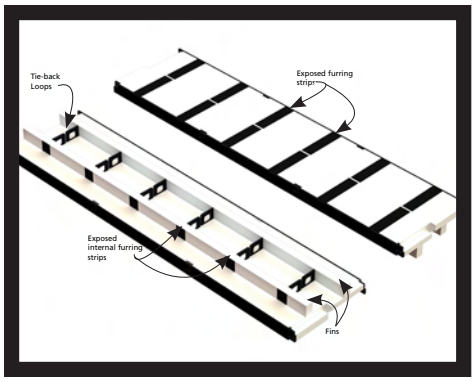

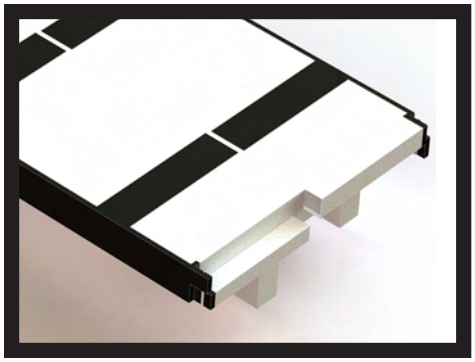

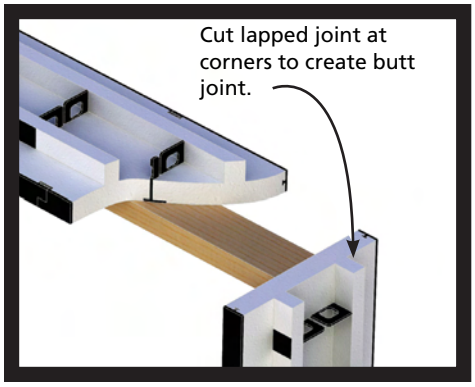



Recommended for use with Logix ICF is the Logix Pro Buck system. Designed for Logix ICF, Logix Pro Buck creates a complete thermal break in window and door openings. And unlike wood and vinyl bucks, Logix Pro Buck is light weight, faster and easier to install, while creating little job site waste. For more information refer to the Logix Pro Buck Installation Guide.

Logix Pro Bucks are designed with lapped joints to create a continuous thermal break when assembled. The lapped ends of an assembled Pro Buck should be cut to create a full contact butt joint at the corners of the opening. Cutting Pro Buck can be done with a hand saw or circular saw.

For efficiency, a table long enough to accommodate connecting and cutting Pro Buck sections together is recommended. This can be done by simply using a pair of sawhorses and a section of plywood, or 2x lumber, such as 2x10 or 2x12 pieces.

When the walls are built to the height of the opening installation of the Pro Buck can begin. The rough opening is measured between the Pro Bucks. Therefore, to account for the 1.5” thickness of Pro Buck, the opening in the Logix ICF wall should be cut 3” wider and 3” taller than the rough opening.

STEP 1: INSTALL Logix PRO BUCK SIDE PIECES

- Assemble the Pro Buck and cut the lapped ends to fit the height of the opening minus 1.5”, which is the thickness of the top Pro Buck piece. The side pieces will rest directly on top of the bottom opening.

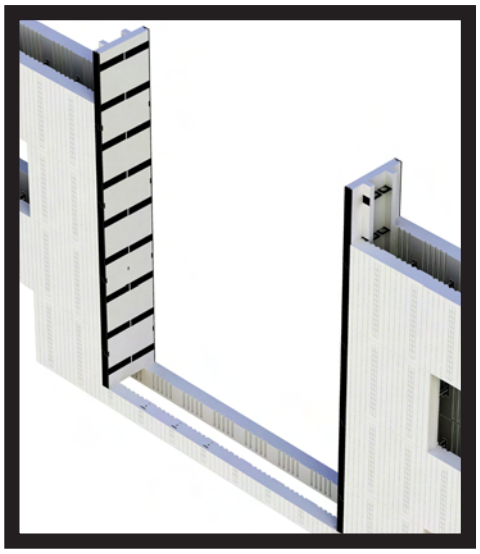

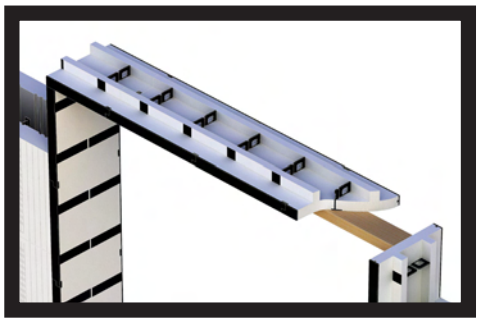

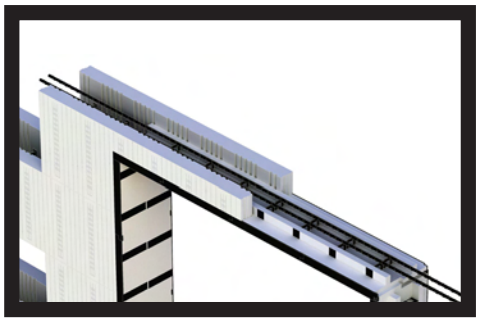

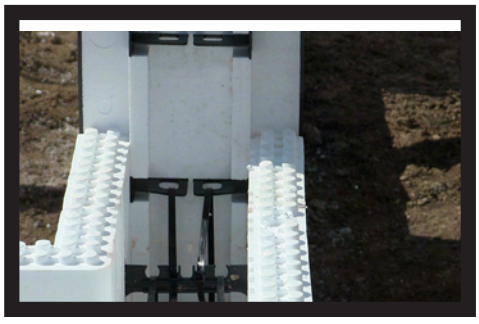

STEP 2: INSTALL Logix PRO BUCK TOP PIECE

- Assemble the Pro Buck and cut the lapped ends to fit the entire width of the opening.
- Measure a 2x wood to fit the width of the opening between the two Pro Buck side pieces installed in Step 1. The 2x should be fastened to the Pro Buck top piece before setting into place.
- Center and fasten the 2x wood to the exposed furring strips of the top piece. This will stiffen the top piece and prevent excessive deflection when installed.
- Place the top piece into the opening with the 2x wood fastened to the top piece. The ends of the top piece will sit directly on the Pro Buck side pieces.
- Rebar for the lintel can be placed and tie-wired directly on the tie-back loops of the top piece, providing a 1.5” concrete cover.
- Continue the next course of Logix over the opening. When the next course is laid use zip ties around the tie-back loop to connect the top piece of Pro Buck to the Logix block.

STEP 3: INSTALL Logix PRO BUCK BOTTOM PIECE

- Assemble Logix Pro Buck and cut the lapped ends to fit the width of the opening between the Pro Buck sides pieces installed in Step 1.
- Avoid debris in the wall cavity by cutting minimum 4” access ports along the bottom Pro Buck piece before placing in the opening.
- Provide access ports every 16” to allow for adequate concrete placement and consolidation. The foam cut out for the access ports can be replaced after the pour, or the concrete can be

2.9.1 – LOGIX PRO BUCK CONTINUED

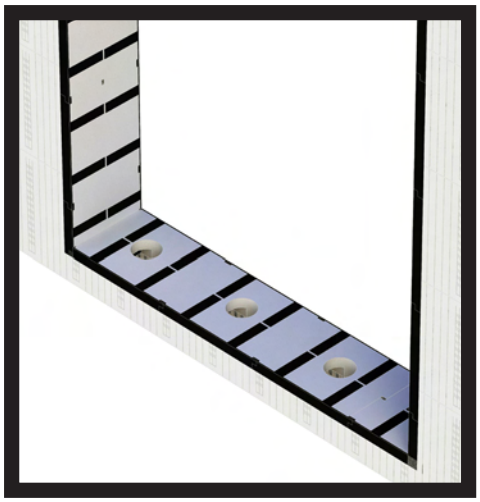

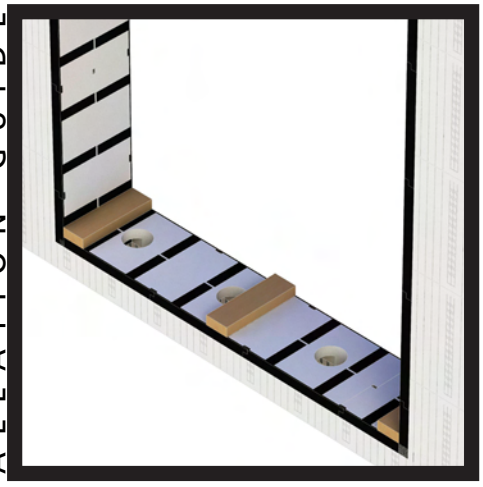



brought flush to the face of the opening.

- Using a membrane flashing is recommended to cover the joints between Pro Bucks and the Logix blocks.

STEP 4: CUT SUPPORT FOR VERTICAL BRACING

- Starting with the bottom of the opening, cut lengths of 2x wood to match the width of Pro Buck.
- Place the cut 2x wood every 2 ft along the bottom of the opening. Make sure to add one at each corner. These cut wood sections will support the vertical wood bracing.

STEP 5: CUT SUPPORT FOR SIDE PRO BUCK PIECES

- At each side of the opening, cut 2x wood so that it fits snug underneath the wood installed at the top of the opening in Step 2, and rests on top of the cut wood sections at the bottom corners from Step 4.
- Center the wood pieces and fasten into the exposed furring strips.

STEP 6: INSTALL VERTICAL BRACING

- Cut 2x wood pieces long enough to fit snug between the wood attached at the top of the opening (from Step 2) and the cut wood sections along the bottom opening (from Step 4). The wood should be centered and toe-nailed to secure in place.





STEP 7: INSTALL HORIZONTAL BRACING

- Cut 2x wood long enough to fit snug between the wood pieces attached to the side of the opening (from Step 5), and space every 2 ft.
- Fasten the vertical bracing (from Step 6) to the horizontal bracing where they cross, and toenail at the ends.

STEP 8: INSTALL PICTURE FRAMING

- When required install picture framing every 8" on center by screwing Wind Devils (or equivalent) through the Logix form panels and into the internal furring strips on the Pro Buck fins. Wind Devil fasteners are available from www.wind-lock.com.
- The internal furring strips are easy to locate as they are in the same spot as the exposed furring strips that run across the face of the buck.
- Finishes such as stucco, or acrylic textured finishes can be applied directly over Wind Devil fasteners (or equivalent).

HINGE SUPPORT FOR DOORS

Door hinges can be fastened to the exposed furring strips. However, in cases where the screw holes on the door hinge do not align with the exposed furring strips additional backing such as plywood against the hinge side door jamb will provide the support required. The solid backing can be fastened to the exposed furring strips.

When adding a solid backing to the hinge side door frame the thickness of the backing should be accounted for when determining the door rough opening.

2.9.2 – TREATED PLYWOOD BUCK



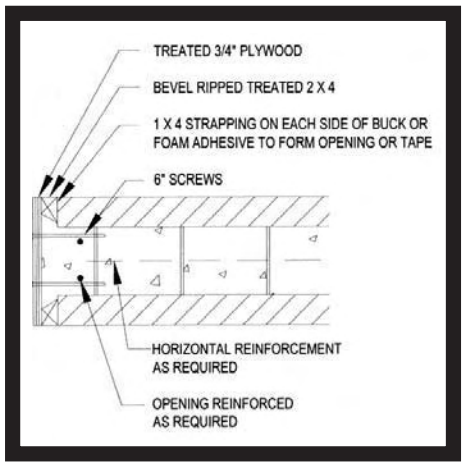

For full size CAD drawing see Section 5, CAD Drawings

Following are several methods for building bucks. Regardless of the method chosen, pre-planning is required to optimize chosen finish materials.

STEP 1: Rip 3/4 inch (19 mm) treated plywood to full form width.

STEP 2: Rip treated 2x4 diagonally on table saw at 180° angle.

STEP 3: Assemble buck with appropriate fasteners with 2x4s creating a dovetail detail.

STEP 4: Assemble buck sides and top with access holes cut in bottom piece for placement of concrete. Two 2x4s can also be used for the bottom to allow concrete placements.

STEP 5: Place pre-assembled buck in opening and fasten in place with foam adhesive. The buck can also be installed in opening as separate pieces.

STEP 6: Install temporary cross bracing to withstand concrete pressure. Attaching screws through the buck and into closest webs can provide additional buck support.

NOTE: Pressure treated wood for window bucks are normally required only if the bottom of the window buck frame is located at or below ground level. Check with local building codes to determine if your area requires pressure treated window bucks.

2.9.3 – SOLID WOOD BUCK



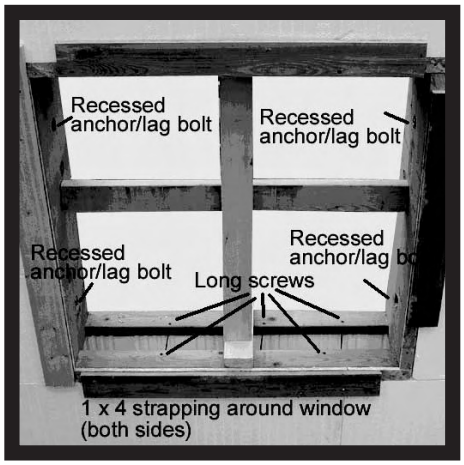

STEP 1: Choose appropriate wood product based on the dimension of the forms:

- 4" (102mm) form: 9.5" (241mm)
- 6.25" (159mm) form: 11.75" (298mm)
- 8" (203mm) form: 13.5" (343mm)
- 10" (254mm) form: 15.5" (394mm)

STEP 2: Cut top piece of buck to fit the width of the opening.

STEP 3: Cut sides of buck, remembering that the top piece rests on the side pieces.

STEP 4: Cut two 2x4s for the bottom to allow concrete placement.

STEP 5: Assemble buck and place in opening.

STEP 6: Once the buck is in place, it must be centered and secured. This can be done by attaching 1x4s to the edges of the buck, extending the edge of the 1x4 over the foam to hold the buck firmly in place. Alternately, the buck can be secured with foam adhesive and tape.

STEP 7: Solid wood bucks will require additional concrete anchors to create a permanent attachment to the concrete.

2.9.4 – RADIUS OPENINGS

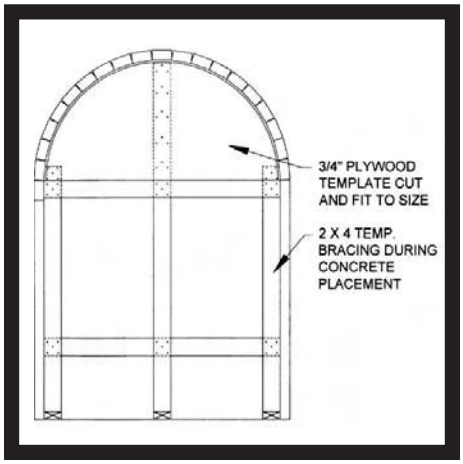

Radius windows and doors can be assembled at the site with shortened pieces of Logix Pro Buck or lumber buck material.

STEP 1: Create the template for the radius opening with OSB or plywood that matches door or window rough opening.

STEP 2: Using template, draw outline of radius on wall, allowing for buck material thickness. Cut accordingly.

STEP 3: Cut buck material into approximately 4 inch (102 mm) widths to create radius buck.

STEP 4: Cut side and bottom buck pieces. Leave openings in the bottom piece for concrete placement and consolidation.

STEP 5: Assemble buck pieces in the opening in the following order:

- bottom
- sides
- radius top

STEP 6: Once the buck is in place, it must be centered and secured. This can be done by attaching 1x4s to the edges of the buck, extending the edge of the 1x4 over the foam to hold the buck firmly in place. Alternately, the buck can be secured with foam adhesive and tape. Insert the radius template in opening to provide additional support.

STEP 7: Solid wood bucks will require additional concrete anchors to create a permanent attachment to the concrete.

2.9.5 – METAL JAMBS

Metal jambs are typically used in commercial applications. Many metal jamb companies will pre-bend jambs to fit Logix forms. Contact your local Logix representative for more details.

2.10 – ADDITIONAL FORM SUPPORT

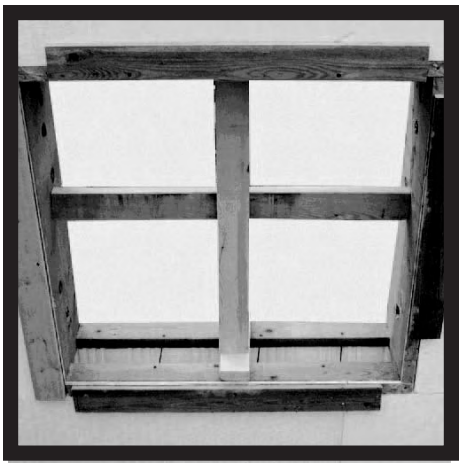

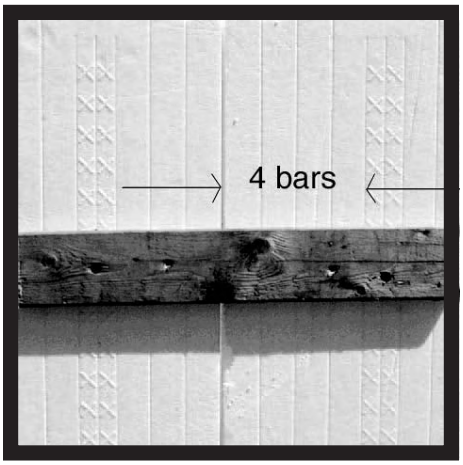

The time spent prior to concrete placement pays huge dividends in job efficiency, accuracy, and profitability. The following items should be completed.

- Horizontal wood strapping is required on both the inside and outside of the wall when:
- The offset between joints is less than 8 inches (203 mm) between courses.
- There are more than 3 foam bar beyond a web.
- Vertical joints are directly on top of each other.
- Window or door openings occur less than 4feet (1.220 m) from a corner. (Run strapping across opening to corner).
- Temporary wood straps are required around window and door openings to maintain straightness.
- Cross bracing with 2x4 supports is required inside window and door bucks to hold bucks in place and prevent sagging or bowing.
- Foam adhesive can be used on wood and plastic bucks to provide additional buck support.

2.10 – ADDITIONAL FORM SUPPORT

CONTINUED



- Foam adhesive should be used to secure all Height Adjusters.
- All outside corners can be reinforced with tape or wood strapping, and zip ties.
- The top course should be secured with adhesive foam, zip ties, or Logix Horizontal and Vertical Hooks.
- Sloped walls should be properly foamed and braced.
- Radius walls should be secured with foam adhesive and flexible strapping material.
- Forms in all lintels should be secured end-to-end with zip ties.
- The middle of large openings should be vertically braced to prevent tipping.
- All forms should be firmly seated to prevent settling.

REPRINTED 2017

Rev. Dec 10/16

2.11 – WALL BRACING & ALIGNMENT SYSTEM







A bracing system provides support for the wall and acts an alignment system to keep the walls straight and plumb during concrete placement. Typically, the wall alignment system is installed on the inner side of the Logix wall.

There are a number of proprietary systems available. However, each bracing unit typically consists of a vertical upright steel channel with slots for attaching screws to the Logix webs, a turnbuckle arm, and a scaffold bracket.

Normally, wall bracing systems are installed after placing 2 to 4 courses of Logix forms (depending on wind and other conditions). Attach the bracing system to the webs using #10 screws with a hex head. Screws should be snug, but not tight.

Place bracing units no more than 2 feet (0.610 m) from each corner or wall end, and every 7 feet (2.134 m) or less thereafter in accordance with OSHA/OHSA requirements. Bracing units should also be placed on either side of every door and window opening.

STEP 1: Attach the upright steel channel to the Logix webs with a screw in each course. The screws should be snug but not tight. Always place screws near the top of the slots to accommodate settling at the interlock during concrete placement.

STEP 2: Attach a turnbuckle arm to the upright with a bolt and then secure to the floor or ground. In light or sandy soil, additional care must be taken to secure diagonal turnbuckle.

2.11 – WALL BRACING & ALIGNMENT SYSTEM

CONTINUED

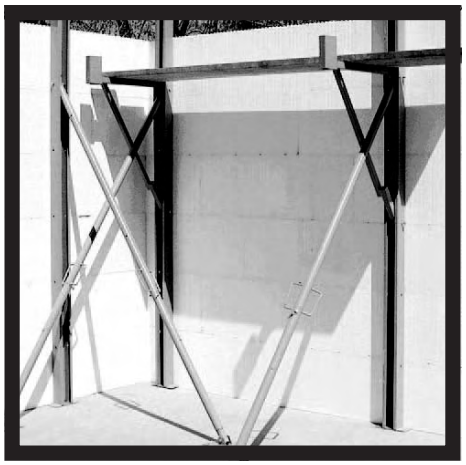

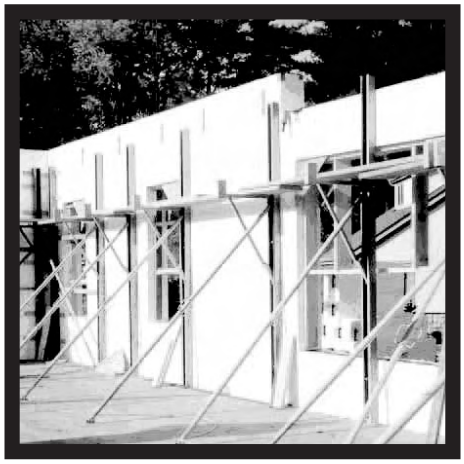

STEP 3: The scaffold bracket is then inserted behind the top of the turnbuckle and secured at the bottom with an additional bolt.

STEP 4: Place the appropriate scaffolding planks and rails according to safety regulations. For requirements on toeboard and handrail configuration, consult OSHA/OHSA.

STEP 5: Prior to concrete placement, make certain walls are aligned perfectly plumb, or leaning slightly inward. The wall must not lean out at all.

STEP 6: A string line must be used to achieve straight walls.

STEP 7: Before, during and after concrete placement, the diagonal turnbuckle arm is used to adjust wall straightness to stringline.

NOTE: For tall wall bracing and alignment see **Section 3.2, Tall Wall Bracing Systems**.

2.12 – FLOOR CONNECTIONS
2.12.1 - LEDGER WITH ANCHOR BOLTS & JOIST HANGERS

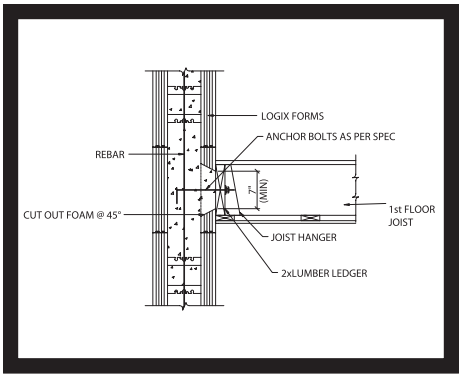

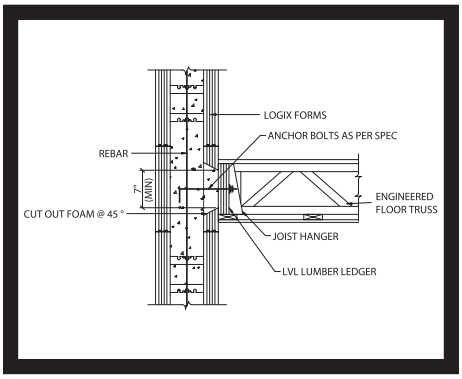

Any type of floor system can be easily integrated with Logix. For any questions or assistance, please contact your local Logix representative.

STEP 1: Place Logix blocks to a height allowing 2 inch (51 mm) minimum coverage over embedments.

STEP 2: Snap chalk lines directly on forms to mark the top and bottom of the proposed rim joist.

STEP 3: Cut openings between chalk lines to accommodate anchor bolts. The quantity and spacing of anchor bolts will be determined by code or engineering. Make certain that cuts are flared to facilitate proper concrete placement.

STEP 4: Pre-cut ledger to length. Pre-drill and install anchor bolts, washers and nuts as per hole layout and local code.

STEP 5: Attach ledger with screws into webs to hold in place while concrete is placed. Once concrete is cured, tighten anchor bolts.

STEP 6: Attach joist hangers to ledger according to hanger manufacturers' specs.

2.12.2 – STEEL ANGLE IRON LEDGER

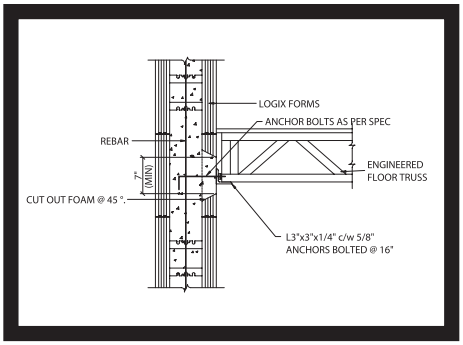

For full size CAD drawing see Section 5, CAD Drawings

When floor spans become very long or concrete topping is applied to the floor, a wood ledger may not be adequate to support floor loads. In this case a steel angle iron can be used in place of a wood ledger. The angle iron can support much more weight and also eliminates the need for joist hangers, as the floor system sits right on the angle.

To install an angle iron ledger follow the steps in **Section 2.12.2**, but use pieces of plywood to temporarily hold the bolts in place. After the pour drill and bolt on the angle iron. Local steel fabricators may be able to pre-drill your angle iron.

Another alternative is to pre-fabricate an angle iron with anchor bolts or nelson studs welded directly to the angle. The entire assembly is then cast in place. This application is described below:

STEP 1: Cut the foam out as you would with the wooden ledger then screw on 2x4 to cover the bottom of the cutout. The 2x4 temporarily supports the angle assembly so it must be installed level.

STEP 2: Sit the angle assembly on top of the 2x4 and tight up against the forms.

2.12.2 – STEEL ANGLE IRON LEDGER

CONTINUED

STEP 3: Screw strapping along the top edge of the angle to keep the assembly against the form during pour.

STEP 4: Pour concrete and cast the assembly in place.

STEP 5: After some curing place floor systems on the angle and establish layout. Once layout is complete fasten the floor joist to angle with a tech screw or by ram-set. You may decide to attach a nailing surface to the bottom leg of the angle iron to nail joists to.

NOTE: It is code in some areas for the angle assembly to be primed.

2.12.3 – BRICK LEDGE FOR TOP & BOTTOM CHORD BEARING SYSTEMS



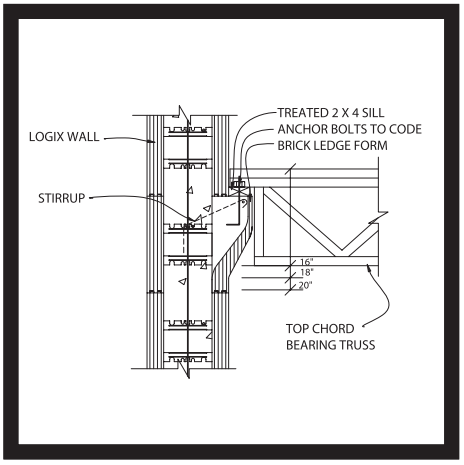

For full size CAD drawing see Section 5, CAD Drawings

The Logix Brick Ledge form can create a load bearing surface to support floor systems, including:

- Top chord bearing trusses
- Bottom chord bearing trusses or joists
- Cast in place concrete floors
- Pre-cast concrete floors

STEP 1: The Brick Ledge and the course above it must be foamed or otherwise secured down along the entire course to eliminate tilting or separating.

STEP 2: If the Logix block in the course above the Brick Ledge is of a smaller width than the Brick Ledge, additional form support will be required.

STEP 3: Install rebar in the Brick Ledge as specified. Butt joints are preferred for rebar in outer edge of Brick Ledge. Install 20 inches (508 mm) long stirrups in each Brick Ledge cavity, including the very corner.

STEP 4: As concrete is placed, install embedments as required.

2.12.4 – LEDGER WITH SIMPSON BRACKET & JOIST HANGERS

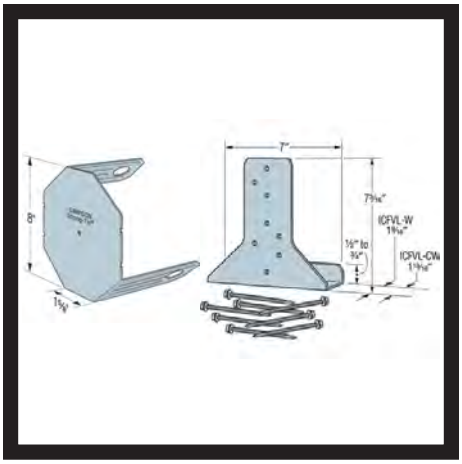

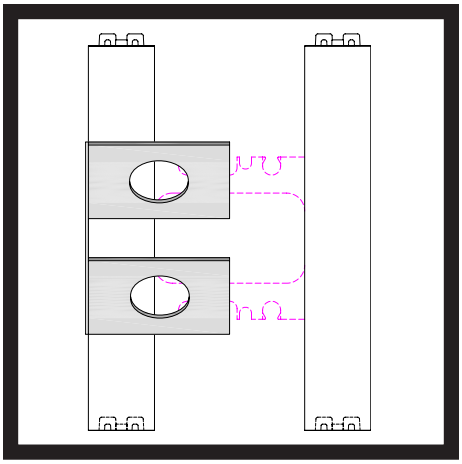

The ICFVL & ICFVL-W ledger connector system from Simpson Strong-Tie is designed for mounting steel or wood ledgers on ICF walls. The perforations in the embedded leg anchor it within the block. The exposed flange provides a structural surface for mounting either a wood or a steel ledger. The ICFVL bracket is the portion inserted into the block and embedded into the concrete. The ICFVL-W bracket is used with 1-1/2 inch (38 mm) ledger material. The ICFVL-CW bracket is used with 1-3/4 inch (44 mm) engineered wood ledgers. These brackets are installed on the ledger and attached to embedded ICFVL.

STEP 1: Place Logix blocks to a height allowing 2 inch (52 mm) minimum coverage over embedments.

STEP 2: Snap chalk lines directly on forms to mark the top or bottom of the proposed rim joist. For ledgers less than 10-3/8 inch (264 mm) deep, brackets should be installed to the top chalk line. For ledgers more than 10-3/8 inch (264 mm) deep, brackets should be installed to the bottom chalk line. For steel floor joists and ledgers, brackets should be centered on the proposed ledger.

STEP 3: Create vertical cuts to accommodate ICFVL bracket. Make sure these cuts are made directly opposite the thinned channels inside the form so that when inserted, the bracket will be exposed to the maximum amount of concrete. The quantity and spacing of brackets will be determined according to the table on **page 2-57**.

2.12.4 – LEDGER WITH SIMPSON BRACKET & JOIST HANGERS CONTINUED

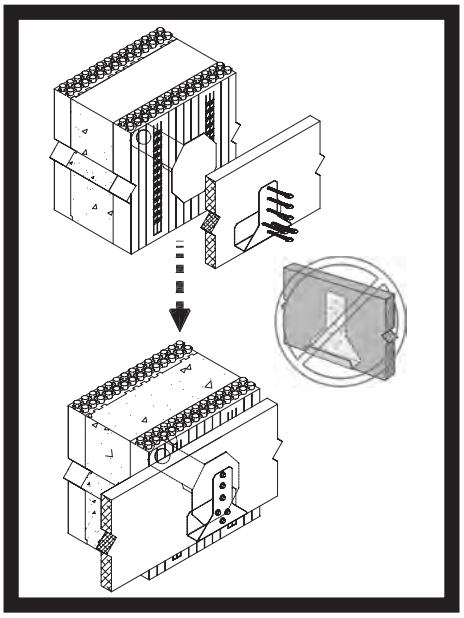

For full size CAD drawing see Section 5, CAD Drawings

STEP 4: Place concrete and consolidate, ensuring brackets are fully embedded.

STEP 5: For wood or composite ledger, after proper concrete curing, the ICFVL-W or ICFVL-CW and appropriate ledger material can be installed using fasteners provided by Simpson Strong-Tie.

It is recommended to temporarily install ledger to chalk line, fastened to webs within 1 inch (25 mm) of the top edge of the ledger. This will make it easier to complete the installation. Slip ICFVL-W or ICFVL-CW underneath wood ledger and attach the screws as required.

For steel ledger, position ledger against ICFVL, level, and attach using appropriate fasteners as required by floor manufacturer.

NOTE: Industry studies show that hardened fasteners can experience performance problems in wet environments. Accordingly, use this product in dry environments only. In addition, due to its corrosive nature, treated lumber should not be used with this product.

Use extra caution when installing the hangers on both sides of a wall. Consult your local Simpson Strongtie rep or contact Simpson Strongtie at (800) 999-5099 prior to installation.

Complete technical data is available at www.strongtie.com

Simpson Strong-Tie Ledger Connector Loads & Spacings

Ledger Type	Model No.	4" LOGIX ICF Allowable Vertical Resistance[2]	6", 8" & 10" LOGIX ICF Allowable Vertical Resistance[2]	4" LOGIX ICF Factored Vertical Resistance	6", 8" & 10" LOGIX ICF Factored Vertical Resistance	Spacing to Replace Anchor Bolts[3,4,6]							
						1/2" Dia. Bolts at				5/8" Dia. Bolts at			
		lbs (kN)	lbs (kN)	lbs (kN)	lbs (kN)	12" (305mm)	24" (610mm)	36" (914mm)	48" (1220mm)	12" (305mm)	24" (610mm)	36" (914mm)	48" (1220mm)
2xD.Fir-L/SPF	ICFVL w/ ICFVL-W	1375 (6.12)	1894 (8.42)	1890 (8.41)	2630 (11.70)	4' (1220mm)	4' (1220mm)	4' (1220mm)	4' (1220mm)	3'-9" (1143mm)	4' (1220mm)	4' (1220mm)	4' (1220mm)
1 3/4" LVL	ICFVL w/ ICFVL-CW	1375 (6.12)	1894 (8.42)	1890 (8.41)	2630 (11.70)	4' (1220mm)	4' (1220mm)	4' (1220mm)	4' (1220mm)	3'-6" (1067mm)	4' (1220mm)	4' (1220mm)	4' (1220mm)
(0.054") 16ga	ICFVL	1770 (7.87)	1894 (8.42)	2435 (10.83)	2630 (11.70)	1'-3" (381mm)	2'-3" (686mm)	-- --	-- --	1' (305mm)	'2 (610mm)	-- --	-- --
(0.068") 14ga	ICFVL	1770 (7.87)	1894 (8.42)	2435 (10.83)	2630 (11.70)	1' (305mm)	2' (610mm)	-- --	-- --	9" (229mm)	1'-6" (457mm)	-- --	-- --

Ledger Type	Model No.	4" LOGIX ICF Allowable Vertical Resistance[2]	6", 8" & 10" LOGIX ICF Allowable Vertical Resistance[2]	4" LOGIX ICF Factored Vertical Resistance	6", 8" & 10" LOGIX ICF Factored Vertical Resistance	Spacing to Replace Anchor Bolts[3,4,6]							
						2-5/8" Dia. Bolts at				3/4" Dia. Bolts at			
		lbs (kN)	lbs (kN)	lbs (kN)	lbs (kN)	12" (305mm)	24" (610mm)	36" (914mm)	48" (1220mm)	12" (305mm)	24" (610mm)	36" (914mm)	48" (1220mm)
2xD.Fir-L/SPF	ICFVL w/ ICFVL-W	1375 (6.12)	1894 (8.42)	1890 (8.41)	2630 (11.70)	1'-9" (533mm)	3'-9"' (1143mm)	4' (1220mm)	4' (1220mm)	3'-6" (1067mm)	4' (1220mm)	4' (1220mm)	4' (1220mm)
1 3/4" LVL	ICFVL w/ ICFVL-CW	1375 (6.12)	1894 (8.42)	1890 (8.41)	2630 (11.70)	1'-9" (533mm)	3'-6" (1067mm)	4' (1220mm)	4' (1220mm)	2'-9" (838mm)	4' (1220mm)	4' (1220mm)	4' (1220mm)
(0.054") 16ga	ICFVL	1770 (7.87)	1894 (8.42)	2435 (10.83)	2630 (11.70)	-- --	-- --	-- --	-- --	-- --	-- --	-- --	-- --
(0.068") 14ga	ICFVL	1770 (7.87)	1894 (8.42)	2435 (10.83)	2630 (11.70)	-- --	-- --	-- --	-- --	-- --	-- --	-- --	-- --

Allowable lateral load = 1905lbs (8.47kN) (Applicable to all form sizes).

1kN = 224.8lbs = 102Kg
1. Minimum steel ledger specification is Fy=33ksi (230MPa) and Fu=45ksi (310MPa) in accordance with CSA S136-94.
2. No load duration increase is allowed.
3. Spacing is based on vertical load only.
4. For steel ledger, spacing is based on a combination of ledger gauge & anchor bolt diameter. Spacing is closer for a 14 gauge ledger in order to achieve the equivalent bolt/ledger capacity.
5. Minimum concrete compressive strength, f'c, is 2500psi (17.25MPa).
6. The designer may specify different spacing based on the load requirements.
7. For more information contact Simpson Strongtie at www.simpsonstrongtie.com

Note: Industry studies show that hardened fasteners can experience performance problems in wet environments. Accordingly, use this product in dry environments only. In addition, due to its corrosive nature, treated lumber should not be used with Simpson Strongties.

REPRINTED 2017
Build Anything Better.
2 – 5 9
www.logixicf.com
LOGIX® INSULATED CONCRETE FORMS
Rev. Sep 23/09

2.12.5 – TRANSITION LEDGE

A transition ledge is commonly used when the Logix walls will be continuing up to the roofline.

The ledge created when transitioning from a wider to a narrower wall can provide a suitable bearing surface for many types of floor systems.

For additional bearing support Logix Taper Top forms can be used as the top course when transitioning from a 6.25 inch (159 mm) to 4 inch (102 mm) Logix wall.

2.12.5.1 – TRANSITION LEDGE WITH TAPER TOP FORMS

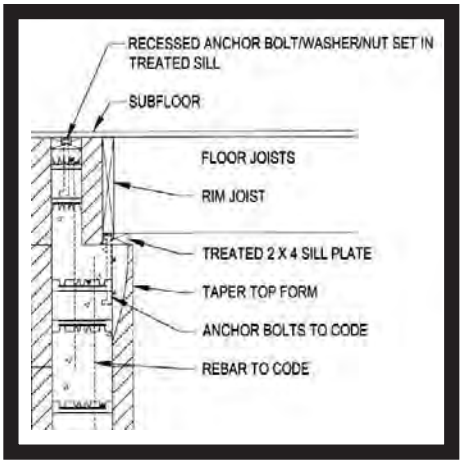

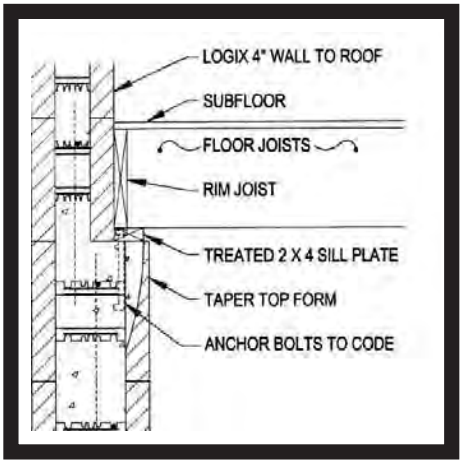

Logix 6.25 inch (159 mm) Taper Top forms can be used as the top course when transitioning to a 4 inch (102 mm) wall. Alternately, 6.25 inch (159 mm) Standard forms and corner forms can be hand cut to create Taper Top forms.

Logix 8 inch (203 mm) Taper Top forms can be used as the top course when transitioning to 4 inch (102 mm) or a 6.25 inch (159 mm) wall.

When hand cutting Taper Top forms, be careful not to drop foam scraps into the wall cavity.

STEP 1: Set Taper Top form as the top course of the lower wall.

STEP 2: Using short lengths of #4 (10M) rebar, provide a bearing support for the unsupported edge of the upper (narrower) form.

STEP 3: Install upper form, using foam adhesive to prevent lifting or tipping at connection.

STEP 4: 1x4 lumber can be attached vertically to the outside of the forms to assist in wall alignment.

STEP 5: Right after concrete placement, trowel off the ledge while checking for level. Insert embedments as required.

2.12.5.2 – TRANSITION LEDGE WITH CORNER BLOCKS

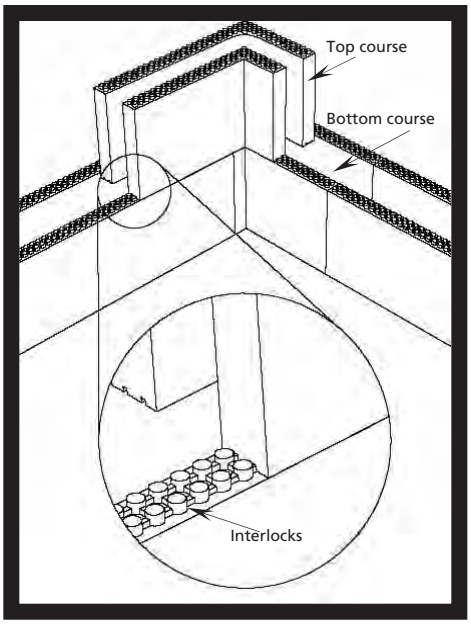

Figure 1a. Proper alignment of top course to bottom course. Interlock aligns with underside of top course.

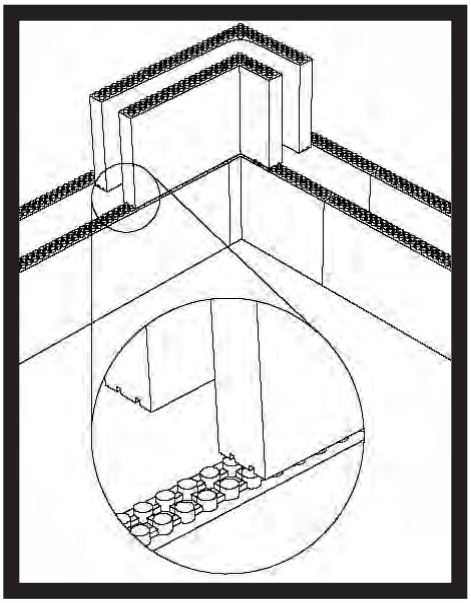

Figure 1b. Improper alignment of top course to bottom course. Interlock does not align with underside of top course.

Transitioning from a wider block to a narrower block is commonly used in cases where a thinner wall becomes more economical (i.e., below grade wall to above grade wall), or to create a ledge that can support a floor or roof system, or finishes such as brick veneer.

When transitioning at corner locations using corner blocks, you might find that the interlocking knobs on the top side of the wider bottom block (bottom course) do not interlock or align with the underside of the top narrower block (top course). As a result, the top course will not sit or snap into its proper position (see **Figure 1a & 1b**).

This occurs in transitions at corner location only, and is easily resolved by following a few simple steps outlined below.

2.12.5.2 – TRANSITION LEDGE WITH CORNER BLOCKS CONTINUED

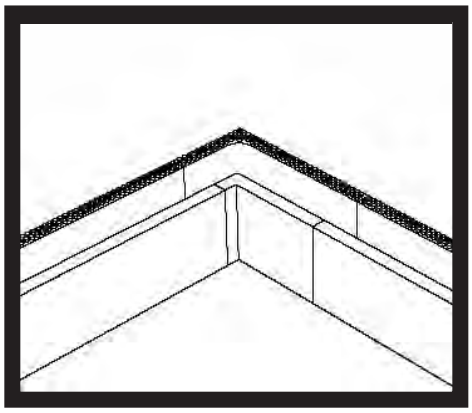

Step 1

STEP 1: Cut the interlocks off the wider corner blocks (it may be necessary to cut the interlocks off the rest of the blocks on the bottom course to ensure the top course can be placed flush on top of the previous course).

As an alternative, Taper Top blocks for the bottom course can be used. The Taper Tops provide more flexibility since they can be adjusted to ensure the interlocks align wit the top course.

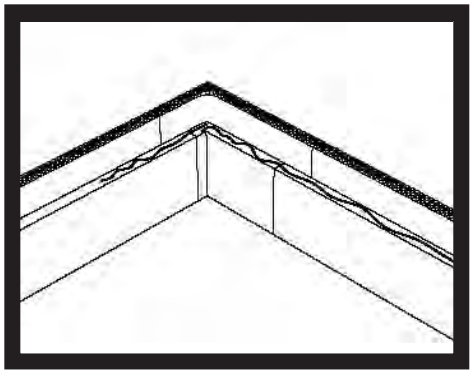

Step 2

STEP 2: Apply foam adhesive prior to installing the top course.

STEP 3: Install the top course beginning with the corner block and continuing around the building perimeter.

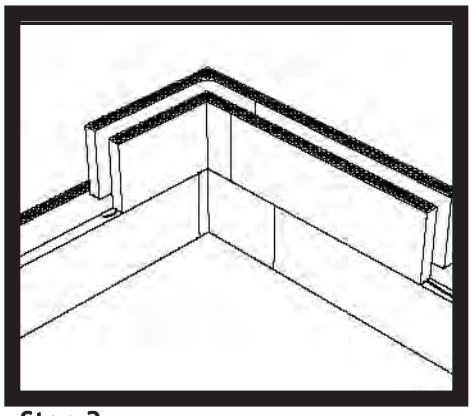

Step 3

2.12.6 – TAPER TOP WITH SILL PLATE

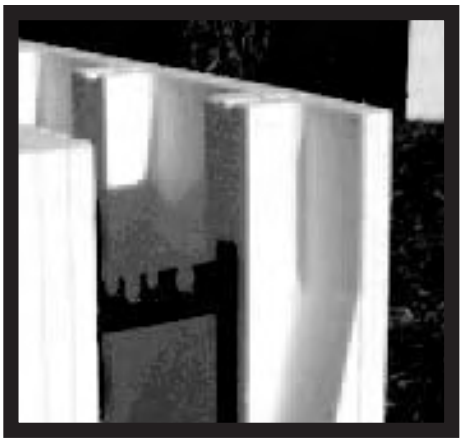

The Taper Top form creates a greater bearing surface at the top of Logix walls.

STEP 1: Taper Top forms need to be foamed down or otherwise secured to the course below.

STEP 2: Trowel concrete flush with top of forms, or inset as required. Be sure to check for level.

STEP 3: Insert embedments as required.

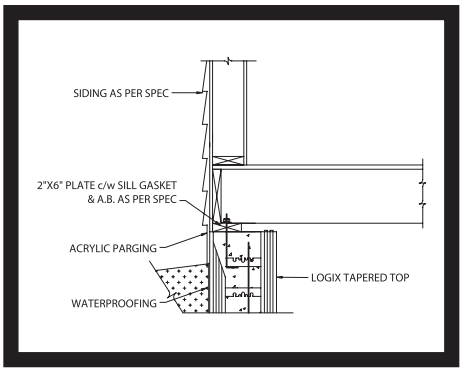

For full size CAD drawing see Section 5, CAD Drawings

2.12.7 – CONCRETE FLOOR SYSTEMS







Building with Logix will allow you to explore many concrete floor system options. Our walls are stronger and can support added weight that wood or steel frame buildings may not. Concrete floor systems are very popular in multi-residential buildings where the transmission of sound and fire are a concern. They are also growing in popularity in single-family residential applications.

2.12.7.1 – PRECAST CONCRETE FLOORS

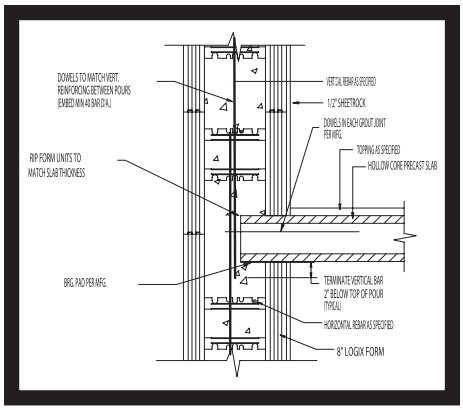

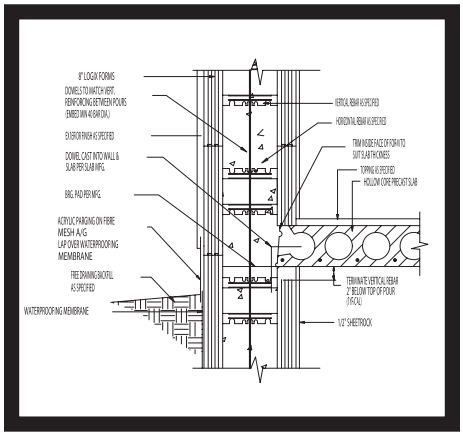

For full size CAD drawing see Section 5, CAD Drawings

Pre-cast floor systems are poured at the factory and shipped to site then craned in place. They are usually tensioned with steel cables cast in the concrete to provide maximum strength. Pre-cast floor are fast and can have very long clear spans.

Typically the Logix wall is constructed to the desired height and the pre-cast planks sit directly on the cured concrete. The planks, typically 4 feet (1.220 m) wide, are craned in place and the groves between planks are grouted together. A 2 inch (52 mm) topping is poured over the deck to provide a smooth and level finish.

The reinforcing of the wall is tied in to the grouted grooves to secure the floor in place. The vertical reinforcing of the wall is extended past the planks to secure future levels of Logix.

See floor manufacturer for specific installation requirements and details.

2.12.7.2 – HAMBRO FLOOR SYSTEM

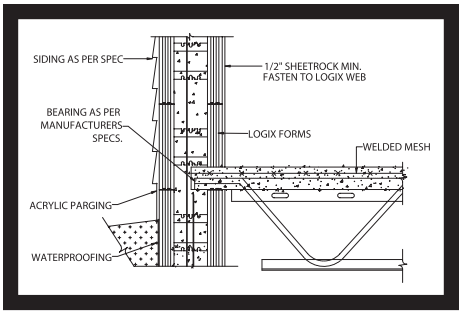

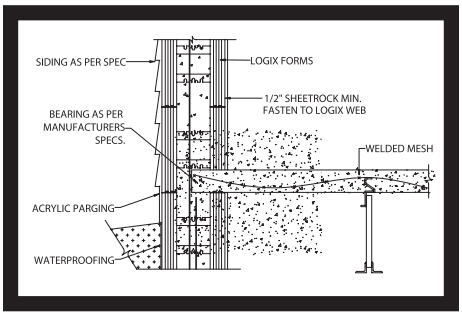

For full size CAD drawing see Section 5, CAD Drawings

The Hambro floor system is a proprietary composite floor system that combines open web steel joists and a 2.5”-5” (64mm - 127mm) floor slab. The joists are spaced 4’-1” (1.225m) O.C. and held apart with locking bars. Then temporary plywood forms are placed between the joists and the concrete deck is poured. After sufficient cure the plywood forms are removed. Hambro is a fast and efficient concrete floor system and can span upwards of 25 feet (7.620 m).

The open joist design makes for easy mechanical and utility installation.

See Hambro for more details: www.hambrosystems.com

2.12.7.3 – STEEL COMPOSITE FLOOR SYSTEM



Composite floors are a combination of steel and concrete that is bonded together to create a very strong floor. The steel composite decking is a corrugated steel pan that has deformations that bond securely with the concrete. The steel deck is the formwork for the pour and then acts as reinforcement in the concrete. These systems are quick to install and are comparatively thin, resulting in more headroom in the finished.

It may be necessary to temporarily support the pan until the concrete has sufficiently cured.

For more info and design consult your floor manufacturer and your local design engineer.

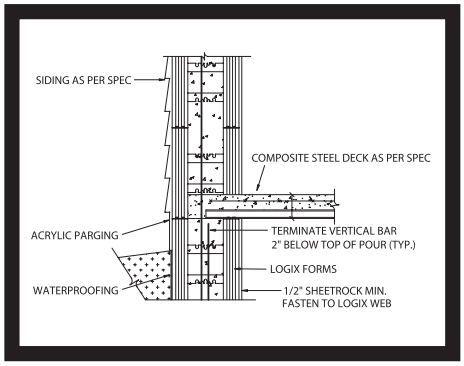

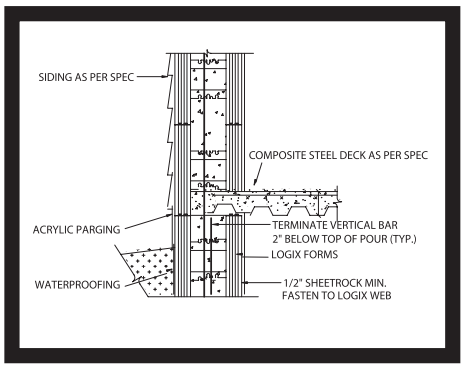

For full size CAD drawing see Section 5, CAD Drawings

2.13 – ROOF CONNECTIONS

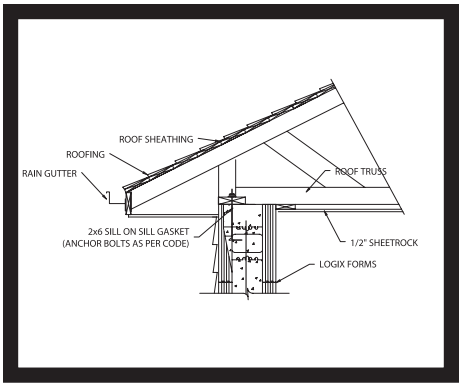

For full size CAD drawing see Section 5, CAD Drawings

Roof connections can be attached to the Logix wall in a variety of ways. Several factors can affect which method to use such as area of the country and wind conditions.

2.13.1 – INSET SILL PLATE

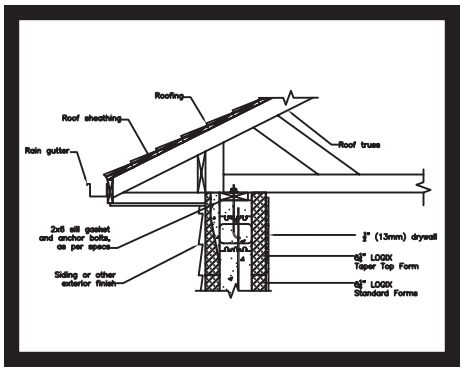

For full size CAD drawing see Section 5, CAD Drawings

This method of sill plate attachment is on one the most energy efficient. The Logix foam on each side provides an excellent thermal barrier.

STEP 1: Trowel the concrete out to a level below the top of the form equal to the depth of the sill plate. Use a site built wood trowel. Be sure to cut the trowel board to the full width of the concrete core.

STEP 2: Install embedments as required.

NOTE: For ease of concrete flow it is recommended to use either Logix Taper Top or Double Taper Top for the top course.

2.13.2 – TOP MOUNTED SILL PLATE

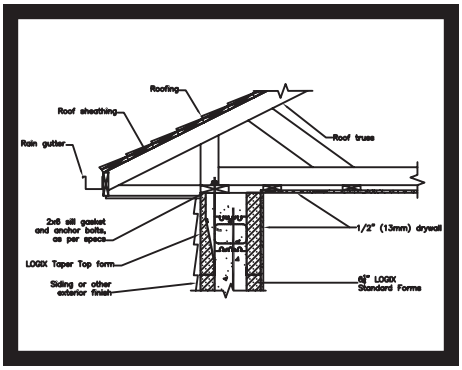

For full size CAD drawing see Section 5, CAD Drawings

This method is typically used when additional wall height is required.

STEP 1: Trowel concrete flush with top of form and recheck for level.

STEP 2: Install embedments as required.

NOTE: For ease of concrete flow it is recommended to use either Logix Taper Top or Double Taper Top for the top course.

2.14 – SERVICE PENETRATIONS







Identify and size all service and utility penetrations. Install all appropriate and properly sized sleeves where required, remembering that lightweight sleeves can be crushed during concrete placement.

List of possible service penetrations

- Dryer vent
- Water heater vent
- Water
- Sewer
- Electrical main service
- Gas line
- A/C line
- Furnace vent
- Air Exchange/HRV
- Central vacuum
- Ducting
- Bathroom vent
- Kitchen appliance venting
- Fireplace rough opening and vent
- Pet door

2.15 – CONCRETE PLACEMENT

PRE-PLACEMENT CHECKLIST

DATE:
FOREMAN:
JOB:

Prior to placing concrete in Logix insulated concrete forms, be certain to mark off each item on the checklist provided in this section.

____ 1. String line in place around the top of entire perimeter?
____ 2. Walls straight and plumb (not leaning out)?
____ 3. Top course foamed or tied down with zip ties or Logix Hooks end to end to maintain dimensions?
____ 4. Additional form support on all corners?
____ 5. Have Tee-walls been foamed and supported?
____ 6. Alignment - screw in every course?
____ 7. Scaffold planking properly secured?
____ 8. All handrails and toe boards installed?
____ 9. All bucks cross braced?
____ 10. All bucks secured to wall?
____ 11. All buck concrete anchors installed?
____ 12. All horizontal and vertical rebar in place?
____ 13. All lintel reinforcing in place?
____ 14. All penetrations installed?
____ 15. All beam pockets in place?
____ 16. All floor embedments installed?
____ 17. Are anchor bolts and hold-downs on site?
____ 18. Has cavity of wall been checked, and foreign material removed?
____ 19. Plywood, screw gun, and saw on site?
____ 20. Interlock protected by tape, or other covering?
____ 21. Proper concrete mix and slump ordered?
____ 22. Concrete vibrator on site?
____ 23. Pump equipped with reducer or 2 1/2" trimmer hose available?

2.15 – CONCRETE PLACEMENT CONTINUED

The most important stage of a successful Logix project is the concrete placement. Extra workers at this stage are important - be certain to have enough on hand during the pour to safely handle placement, consolidation, alignment, embedments, and cleanup.

Ensure straight walls by placing a string line at the top course set off from the wall using 3/4 inch (19 mm) pieces of wood placed in the corners. Check for straightness by running another 3/4" inch (19 mm) piece of wood between the string and wall. Adjust the turnbuckles as necessary to keep the wall straight during concrete placement. Walls must be perfectly straight or leaning in slightly.

During concrete placement, watch the string lines to monitor the wall for straight and plumb.

Suggested minimum compressive concrete strength of 2,900 psi (20MPa) at 28 days. For seismic areas mix design should be confirmed with local codes or by an engineer.

The following maximum aggregate sizes are recommended for use in Logix walls:

	Form Cavity Size, in. (mm)				
	4 (102)	6.25 (159)	8 (203)	10 (254)	12* (305)
Max. Aggregate Size, in. (mm)	3/8 (9.5)	3/8 (9.5) to 1/2 (13)	3/4 (19)	3/4 (19)	3/4 (19)



Concrete slump should be 5 inch (127 mm) to 6 inches (152mm) for best results.

When placing concrete in 4 inch (102 mm) forms, it is recommended that the pump truck be fitted with a 2.5 inch (76 mm) flexible hose end.

Other methods of placement include conveyor truck, crane and bucket, and directly off the ready mix truck.

Lift height is determined by many factors, such as air temperature, concrete temperature, slump, etc. In general, lift heights should not exceed 4ft (1.220 m) per hour.

Consult local ready mix companies for appropriate concrete mix design.

When placing concrete below freezing or at temperatures above 100° F (38° C), it's important to protect all exposed concrete with insulation.

2.15 – CONCRETE PLACEMENT CONTINUED

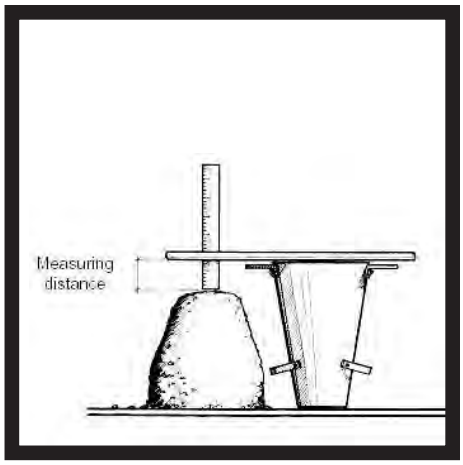

Proper concrete consolidation is critical in obtaining a structurally solid wall.

Use an internal vibrator with a head size of 3/4 inch (19 mm) to 1 inch (25mm) and maximum 1 hp motor. Do not use a vibrator with a head larger than 1 inch (25 mm).

Appropriate internal vibration assures the strongest walls possible and is especially important for below grade application where the greatest loads occur.

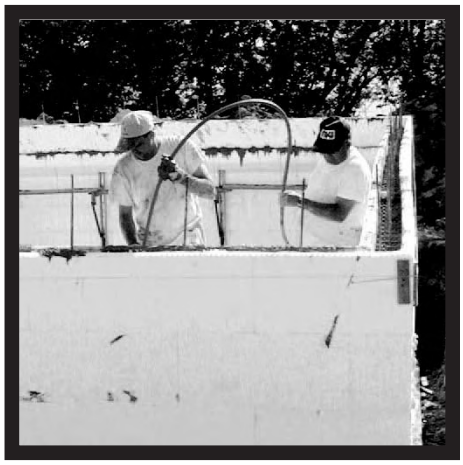

The rule of thumb for internal vibration is fast in and slow out, always moving, with a withdrawal rate of approximately 3 inch (76 mm) per second.

STEP 1: Complete the pre-placement checklist.

STEP 2: Begin concrete placement under openings, filling those areas and consolidating.

STEP 3: Beginning no closer than 3 feet (0.914 m) from a corner, start filling the wall from the top, allowing the concrete to flow gently toward the corner. Then fill in that corner from the opposite side using the same technique.

STEP 4: Continue placing concrete around entire wall in appropriately sized lifts, using the same technique at each corner to minimize fluid pressure.

STEP 5: As the concrete is being placed, consolidation is taking place to remove air and voids to ensure structural integrity.

STEP 6: As the concrete is being placed, continually check wall alignment using string line. Adjust the wall accordingly to maintain straight and plumb using the adjustable turnbuckle.

STEP 7: Return to starting location and begin the next lift. Follow all the techniques established above.

POST-PLACEMENT CHECKLIST

DATE:
FOREMAN:
JOB:

After placing concrete in Logix insulated concrete forms, be certain to mark off each item on the checklist provided in this section.

____ 1. Has consolidation been completed?

____ 2. Are walls straightened to string line?

____ 3. In extreme temperatures, has exposed concrete been protected?

____ 4. Have all anchors and embeds been installed?

____ 5. Has spilled concrete been disposed of?

____ 6. Has final check for straight and plumb been done?

2.16 – ELECTRICAL INSTALLATIONS

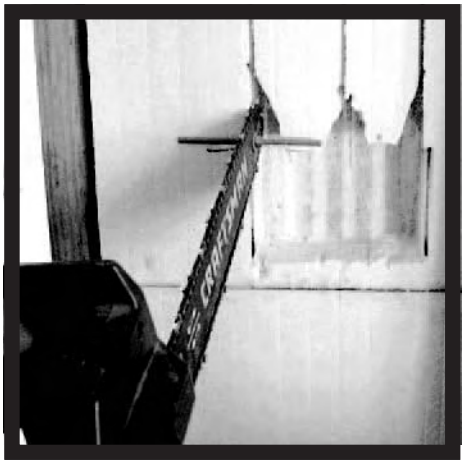





Electrical and plumbing installation are typically performed after concrete placement.

The exception to this rule is the placement of conduit that penetrates the wall, which must be performed before concrete placement.

Installing electrical wiring and boxes is accomplished by creating channels in the EPS foam. When installed in Logix walls directly against the concrete, electrical boxes will extend 1/2 inch (13 mm) beyond the foam to match the thickness of 1/2 inch (13 mm) sheetrock.

Various tools can be used to create the channels and spaces for wiring and boxes:

- Electrical chainsaw with an adjustable roller depth stop
- Hot knife
- Circular saw with a masonry blade

Make the wiring channels narrow so there will be a friction fit with the wiring. The wiring needs to remain embedded well into the foam to meet local electrical codes. Foam adhesive can be spot-applied into the channel to help hold the wiring in place.

2.17 – PLUMBING INSTALLATIONS



In most cases, buildings are designed so plumbing pipes are not carried through the Logix walls, except for utility entry and exit points.

However, in some cases it may be required to embed pipe in the EPS. For example, a kitchen vent tube may need to be installed vertically in the EPS foam. Pipes embedded in the foam cannot exceed 1-1/2 inch (38 mm) in diameter. Fittings embedded in the foam cannot exceed 2-1/2 inch (64 mm) diameter.

An external faucet will require the installation of a hose sleeve through the wall prior to concrete placement. This will permit replacement of the faucet or pipe should it ever be necessary.

If connecting to existing sewer lines, establish the location of the required opening and ensure clearances, since this is difficult to change.

2.18 – INTERIOR & EXTERIOR FINISHES
2.18.1 – VAPOR & AIR BARRIERS

The Logix wall assembly has no need for an additional vapor barrier, the solid concrete core covered with the low permeance EPS (Type II) foam insulation on the inside wall face keeps water vapor from penetrating the wall.

The fact that the inner face of EPS foam maintains a similar temperature as the inside air of the building and that a Logix wall has no cavity means that no condensation can occur in a Logix wall assembly.

The Logix wall assembly has no need for an air barrier (building wrap) layer as the solid concrete core and low permeance EPS (Type II) foam insulation on the outside wall face keeps air and moisture from penetrating the wall.

2.18.2 – INTERIOR DRYWALL

Drywall should be installed in the same manner on a Logix wall as on a stud wall, with the following time-saving exceptions:

- All webs (studs) are on 8 inch (203 mm) centers from floor to ceiling for easy attachment of any type of interior wall finish.

- The butt joints of the sheetrock do not need to fall on webs (studs) as the foam provides solid backing wherever the joints fall. However, the edge of sheetrock panels should not exceed more than 4" from webs.

- A foam-compatible adhesive can be used to effectively fasten the sheetrock to the Logix wall along with screws. Always make sure to verify the local code for types and spacing for sheetrock fasteners. Typically, adhesive alone is not allowed as a fastener of sheetrock, but again check with local building codes.

Many local building codes require the application of 1/2 inch (13 mm) drywall or other suitable thermal barrier in any living space even though the EPS foam has a fire retardant component. Always verify local building code requirements.

Non-habitable spaces such as crawl spaces, attics, and other types of hidden areas typically do not require a thermal barrier (drywall).

Embedded furring tabs are fixed at each corner of the Logix 90° corner forms for solid sheetrock fastening at all corners.

2.18.3 – EXTERIOR SIDING



Siding material of some kind must be installed over the EPS foam to protect it from the UV rays of the sun. Foam left exposed to the sun will degrade on the exposed surface by slowly breaking and getting "dusty".

NOTE: When using Logix Platinum Series care should be taken to protect exposed foam surfaces from reflected sunlight and prolonged solar exposure until wall cladding or finish material is applied. Shade exposed foam areas, or remove sources of reflective surfaces, where heat build up onto exposed foam might occur. For more information refer to BASF Technical Leaflet N-4 Neopor, "Recommendations for packaging, transporting, storing and installing building insulation products made from Neopor EPS foam." (The BASF Technical Leaflet is attached to every bundle of Logix Platinum forms delivered to a job site).

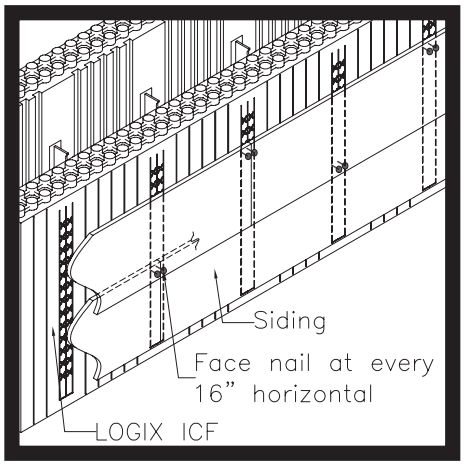

Metal and vinyl siding can be installed directly over the top of the EPS.

Although air guns can be used, Logix recommends the use of screw guns when attaching exterior siding. Always follow manufacturer's recommendations and local codes to determine the size and spacing of fasteners for all siding products.

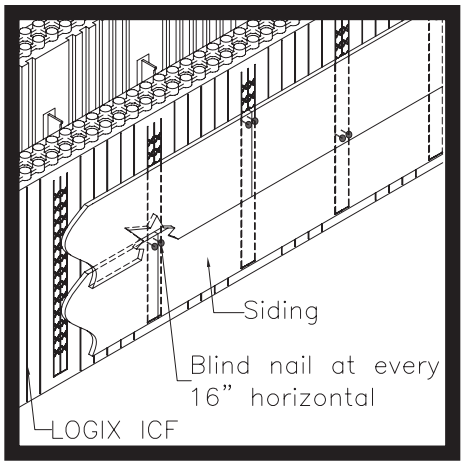

Any type of siding that is used on a typical wood-framed building can be used on a Logix building.

The siding channel stock around doors and windows can be fastened to whatever type of buck material was chosen, in a similar fashion as wood framed building.

2.18.4 – STEEL PANEL SIDING

Steel panel siding can be applied vertically to a Logix wall when the style of the panel matches the Logix web 8 inch (203 mm) increments for fastening purposes.

When a panel siding is chosen that doesn't fit with 8 inch (203 mm) increment for fastening, two different methods are available:

METHOD 1:
A 1/2 inch (13 mm) or 3/4 inch (19 mm) strip of wood can be attached horizontally to the webs in the wall to provide the manufacturer's specified fastener spacing.

METHOD 2:
The panels can be installed horizontally, by fastening directly into the webs.

NOTE: Although air guns can be used, Logix recommends the use of screw guns when attaching exterior siding. Always follow manufacturer's recommendations and local codes to determine the size and spacing of fasteners for all siding products.

2.18.5 – WOOD SIDING

Any wood siding can be attached to the Logix wall in the same manner as to a traditional framed building. The spacing of the web studs on 8 inch (203 mm) centers allows for industry standard spacing of fasteners. Typically, screws are used for attaching wood siding or even half-log siding to the Logix wall.

Although air guns can be used, Logix recommends a screw gun with screws in clips (Quik Drive). This is usually the fastest method for applying wood siding. Always follow manufacturer's recommendations and local codes to determine the size and spacing of fasteners for all siding products.

A good practice for installing wood siding on a wall, is to apply the siding over vertical 1 inch x 2 inch (25 mm x 51 mm) wood nailing strips with a screen at the bottom. The screen keeps insects out while the space allows air to circulate behind the siding. The air circulation helps equalize the moisture content in the wood siding, which makes for much more dimensionally stable siding and longer lasting application.

2.18.6 – EIFS

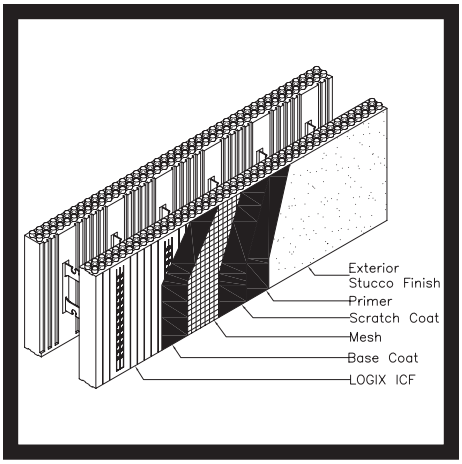

There are now acrylic-based stucco products available that are more flexible and easier to work with than traditional cement-based stucco. Collectively these products are known as EIFS (Exterior Insulation Finish Systems) and almost always require an EPS substrate.

Because Logix blocks are made with EPS, they are a natural fit for EIFS finishes. In addition, the webs in Logix blocks are embedded 1/2 inch (13 mm) deep in the EPS foam to comply with EIFS manufacturer requirements.

It is important to follow the EIFS manufacturer's application procedures.

2.18.7 – TRADITIONAL STUCCO (CEMENT-BASED)

Logix walls will accept traditional cement-based stucco product. Although air guns can be used, Logix recommends a screw gun when attaching the wire lath mesh to Logix walls. Use screws with a wide head or screws along with washers to best hold the mesh in place.

Consult local building codes for vertical and horizontal fastener placement requirements. The center-to-cente fastener spacing requirements for nails and staples must be followed for screws as well. Again, check with local codes for all specific requirements relating to the application of stucco over EPS insulation.

2.18.8 – CEMENT COMPOSITE SIDING

Recently the new cement fiber siding products have gained popularity. This type of siding can usually be fastened directly to the Logix webs. Although air guns can be used, Logix recommends a screw gun to fasten flat-headed exterior screws at 16 inch (406 mm) centers. The screws pull the siding in tight and hold the siding securely in place. Some manufacturers may require the siding to be strapped out to allow air space behind. Vertical or shake patterns will require strapping for fastening. Always follow manufacturer's recommendations and local codes to determine the size and spacing of fasteners for all siding products.

Check with your siding manufacturer for specific requirements.

2.18.9 – BRICK VENEER

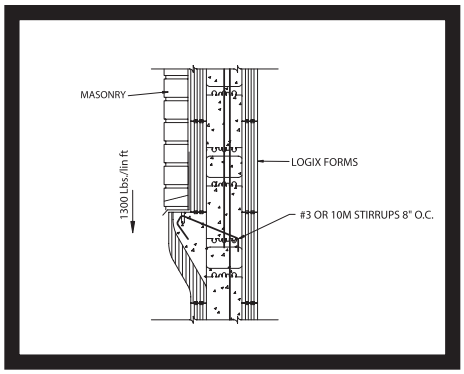

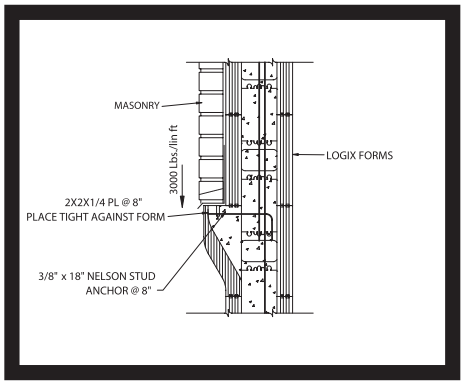

For full size CAD drawing see
Section 5, CAD Drawings

The Logix Brick Ledge form units are used to support a brick veneer as the exterior finish material. The Brick Ledge forms are simply placed at a level where the brick is desired to begin. The design of the form creates a reinforced concrete ledge.

With standard reinforcing, the Brick Ledge can bear up to 1300lb/ft (19kN/m) of wall.

With site-specific engineering, up to 3000lb/ft (44kN/m) of wall is attainable.

To install Brick Ledge form units, follow the instructions on **Section 2.7.4** of the guide. When reinforcing steel and concrete are in place within the wall, brick is laid on the ledge and tied back to the webs with brick ties as specified.

2.18.10 – BELOW GRADE WATERPROOFING, DAMPPROOFING & PARGING

There are many methods available to protect the "below grade" and the "just above grade" areas of the exterior of your building.

Dampproofing is used on concrete or masonry surfaces to repel water in above grade walls. The 2.75 inch (70 mm) and thicker foam panels of the Logix insulated concrete forms acts as dampproofing, therefore, no additional dampproofing treatment is required.

NOTE: Although dampproofing above grade walls is not typically required, check with local building codes for dampproofing requirements.

2.18.10.1 – BELOW GRADE WATERPROOFING

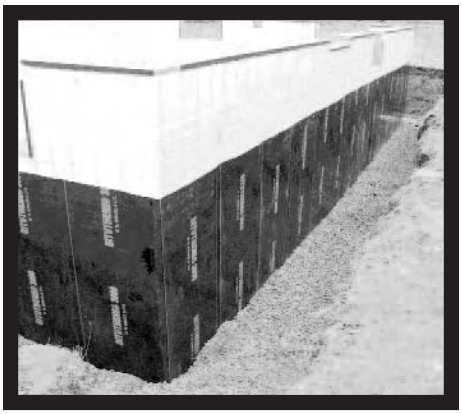



Logix recommends a rubberized "peel and stick" waterproofing membrane. The membrane is applied vertically to the wall from grade level down to and overlapping the top of the footing. It is recommended to use protection board (1/2 inch EPS or EXP foam sheets or similar) to prevent damage to the waterproofing membrane during backfilling.

Free flow drainage material with a maximum fluid density of 30 pcf (480 kg/m^3) is recommended, i.e., sand or sand-gravel mix.

NOTE: Membrane should be installed within one week prior to backfill being placed. Sunlight and high temperatures may cause the membrane to begin to "sag" which may cause wrinkles in the material which may result in tears or punctures during the placement of the backfill material. Should you choose to use one of the many other types of waterproofing available be sure to follow the manufacturer's recommended installation procedures.

STEP 1: Prep the wall and footing area to be covered by removing dirt and debris.

STEP 2: Snap chalk lines for the "grade" line.

STEP 3: Measure the height from grade line to footing. Add enough length to cover the top of the footing and cut pieces of membrane to length.

2.18.10.1 – BELOW GRADE WATERPROOFING CONTINUED



Also cut smaller 4" - 6" (102mm - 152mm) pieces to be applied as "corner caps". This will provide double ply protection in the corners.

STEP 4: Apply the "corner cap" pieces on each corner first.

STEP 5: Starting at a corner, line up the membrane so it is hanging vertically (using our vertical cut lines as a guide to keep membrane plumb). Pull back the first 8" - 10" (203mm - 254mm) of the release paper and press the membrane to the wall. Continue pulling back the release paper and pressing membrane to the wall.

STEP 6: Continue applying cut pieces of membrane around the wall, maintaining 2 inch (51 mm) overlap by using the printed marks on the membrane as a guide.

NOTE: Extreme temperatures, both cold and hot, may cause the installer to consider other types of waterproofing. Be sure to follow the manufacturer's installation process.

2.18.10.2 – ABOVE GRADE PARGING

The area that is above grade line and below the exterior siding material must be parged to protect the EPS from damage.

Parging is a coating material that is applied to give a finished appearance to the small area of wall that is above grade level but below where the siding materials will begin. Logix Prepcoat is the preferred option for this area.

STEP 1: Prep the wall area to be covered by removing any dirt or debris. The wall may need to be "scuffed" to reveal fresh EPS beads.

STEP 2: Mix Prepcoat dry material with water to a pasty consistency.

STEP 3: Using a trowel apply a thin, 1/16" - 1/8" (2mm - 3mm) "skim coat" of Prepcoat.

STEP 4: Pre-cut pieces of Logix fiber mesh 1" - 2" (25mm - 51mm) wider than the area to be parged. This will allow for an over-lap over the waterproofing membrane to create a "drip ledge".

STEP 5: Embed the mesh in the skim coat firmly.

STEP 6: Once the area is dry to the touch apply a second coat of Prepcoat. This coat can be painted or stained if desired.

2.18.11 – ATTACHING FIXTURES

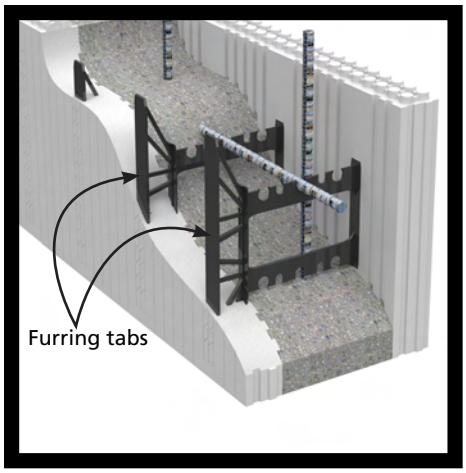



For attaching fixtures Logix provides furring tabs spaced every 8 inches, which provides more fastening points than stud walls.

Different methods are used to attach fixtures depending on whether the fixture is light or heavy in weight.

LIGHT WEIGHT FIXTURES

Fixtures that are light in weight, or are not subjected to heavy loads, such as small picture frames or mirrors, can be attached to the wall without having to fasten into the furring tabs by using typical hanging pins, finishing nails or plugs.

Light weight fixtures such as curtain rods, large picture frames or mirrors, bathroom accessories, etc., require a more secure attachment to the wall.

The Grappler, a product made specifically for ICFs, provides a stronger attachment for fixtures that are light in weight but require a more secure hold. The Grappler is also useful in areas where a stronger fastening point is required in an area where furring tabs may be absent. The Grappler is a 4" x 8" steel meshed plate that is pressed into the surface of the Logix form panels before drywall is placed. Once the drywall is installed the Grappler is sandwiched between the ICF and drywall creating a much stronger and secure attachment area.

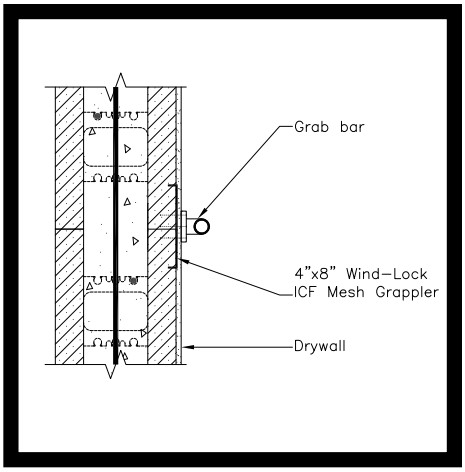

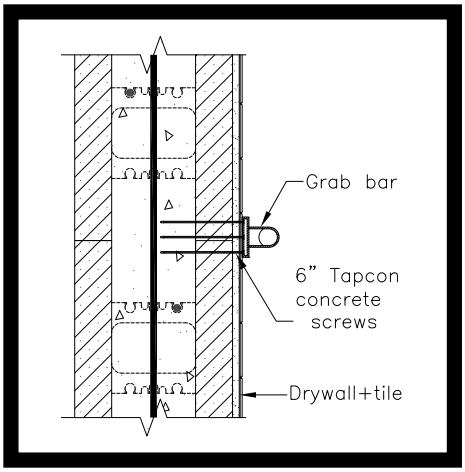

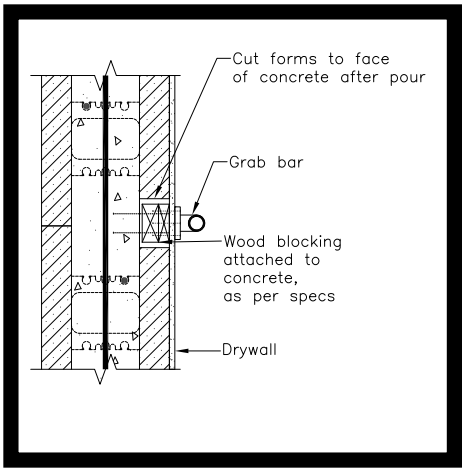

For full size CAD drawing see Section 5, CAD Drawings

HEAVY WEIGHT FIXTURES

Additional backing is recommended to support heavier wall fixtures, such as kitchen cabinetry, wall mounted fixtures, grab bars, hand rails, etc.

Different attachment methods can be employed depending on the type of attachment.

Cabinets

Method 1: Plywood board can be attached to the Logix wall behind the heavier cabinets in place of gypsum board, providing a thermal barrier comparable to gypsum and a strong attachment surface for heavier items and fixtures. Be certain to attach the plywood board to the Logix webs with a sufficient number of screws to hold heavy items in place for when loads are applied.

Method 2: Create horizontal channels behind the cabinets equal in width to a 2x4 and install 2x4 backing directly to the concrete surface using sufficiently long concrete screws and a rotohammer. Attach the cabinets to the 2x4s.

Grab Bars

Method 1: Before placing drywall, place the Grapplers onto Logix at grab bar fastening points. Install the drywall and fasten the grab bar to the Grapplers.

Method 2: Use Tap Con screws to anchor the grab bar directly to the concreted.

Method 3: For a stronger hold remove the foam and replace with wood blocking behind the grab bar mounting bracket. The wood blocking should be mechanically fastened to the concrete.

Televisions

Method 1: Face mounted TVs upto 200lbs can be secured to the furring tabs with a minimum of 4 course thread screws. Care must be taken to ensure the screws are properly fastened to the furring tabes. Fastening to Grapplers in combination with furring tabs will also work.

Method 2: Replace the drywall behind the mounting bracket with plywood extending the full height of the mounting bracket and covering at least 3 furring tabs in length. Fasten the plywood with sufficient number of screws to the furring tabs. Conceal the plywood with drywall compound to blend with the drywall and attach the mounting bracket to the plywood.

TV mounts that swivel causes heavier loading conditions and should be anchored to the concrete with plywood and tapcons.

2.18.12 – HOLDING POWER OF SCREWS FASTENED TO LOGIX FURRING TABS

Web fastener withdrawal and shear testing using course and fine thread drywall screws. Tests were conducted on furring tabs embedded 1/2 inch (52 mm) from the surface of the 2.75 inch (70 mm) Logix EPS panels .

	Max. Average Withdrawal Resistance	Allowable Withdrawal Resistance[1]	Max. Average Shear Resistance	Allowable Shear Resistance[2]
Coarse Thread Drywall Screw	166lb (75.3kg)	33lb (15.0kg)	367lb (166.5kg)	49lb (22.2kg)
Fine Thread Drywall Screw	169lb (76.7kg)	34lb (15.4kg)	328lb (148.8kg)	49lb (22.2kg)

1kg = 9.81 Newtons

1. Allowable withdrawal resistance values are based on a factor of safety of 5.
2. Allowable shear resistance values are based on a factor of safety of 3.2 within defined deflection limits (for more detailed information contact info@Logixicf.com)

NOTE: The numbers in this table represent resistance at failure. Good building practice mandates a minimum of a 5 to 1 safety factor in calculating fastener loading. For complete test results on additional fasteners, see **Section 8** in the Logix Design Manual or consult your local Logix representative.

2.19 – RADIUS WALLS

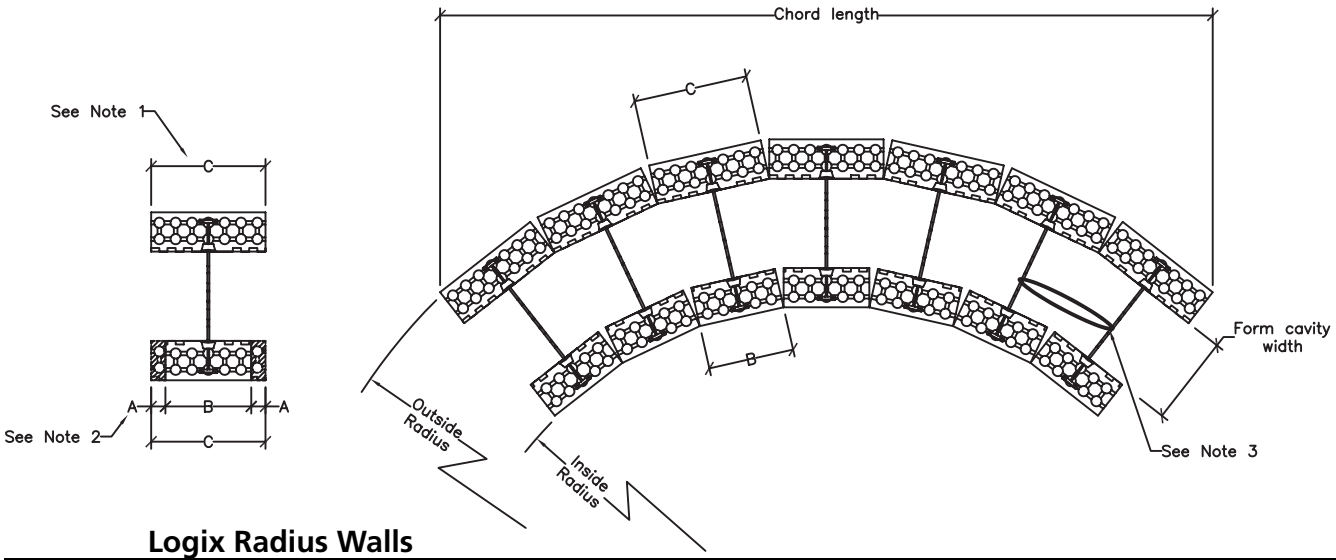

INSTALLATION GUIDE

Logix Radius Walls

Outside Radius, ft. (m)	Form Cavity Width							
	4" (102mm)		6.25" (159mm)		8" (203mm)		10" (254mm)	
	C, in. (mm)	A, in. (mm)	C, in. (mm)	A, in. (mm)	C, in. (mm)	A, in. (mm)	C, in. (mm)	A, in. (mm)
3 (0.914)	8 (203)	13/16 (21)	8 (203)	1 3/32 (28)	8 (203)	1 19/64 (33)	8 (203)	1 35/64 (39)
3.5 (1.067)	8 (203)	11/16 (17)	8 (203)	59/64 (23)	8 (203)	1 3/32 (28)	8 (203)	1 19/64 (33)
4 (1.219)	8 (203)	19/32 (15)	8 (203)	51/64 (20)	8 (203)	61/64 (24)	8 (203)	1 1/8 (29)
4.5 (1.372)	8 (203)	17/32 (13)	8 (203)	45/64 (18)	8 (203)	27/32 (21)	8 (203)	1 (25)
5 (1.524)	8 (203)	15/32 (12)	8 (203)	5/8 (16)	8 (203)	3/4 (19)	8 (203)	57/64 (23)
5.5 (1.676)	8 (203)	27/64 (11)	8 (203)	9/16 (14)	8 (203)	43/64 (17)	8 (203)	51/64 (20)
6 (1.829)	8 (203)	25/64 (10)	8 (203)	33/64 (13)	8 (203)	5/8 (16)	8 (203)	47/64 (19)
6.5 (1.981)	8 (203)	23/64 (9)	8 (203)	15/32 (12)	8 (203)	9/16 (14)	8 (203)	43/64 (17)
7 (2.134)	8 (203)	21/64 (8)	8 (203)	7/16 (11)	8 (203)	17/32 (13)	8 (203)	5/8 (16)

NOTES:

1. Field cut Logix Standard forms (straight forms) into widths, C, according to Logix Radius Walls table. For inside radius field cut additional foam, A, accordingly.
2. Secure each radius section with zip ties, Logix Hooks, tape or foam.
3. The field cuts, C, are kept at 8" (203mm), 16" (406mm), 24" (610mm) or 48" (1220mm) lengths. The field cuts, A, are determined depending on required radius. The combined field cuts, A and C, results in an outside radius which is within 1% of the design radius for radii less than 60ft (18.3m), and 1% to 2% for radii between 60ft and 100ft (18.3m to 30.5m).

Outside Radius, ft. (m)	Form Cavity Width							
	4" (102mm)		6.25" (159mm)		8" (203mm)		10" (254mm)	
	C, in. (mm)	A, in. (mm)	C, in. (mm)	A, in. (mm)	C, in. (mm)	A, in. (mm)	C, in. (mm)	A, in. (mm)
7.5 (2.286)	8 (203)	5/16 (8)	8 (203)	13/32 (10)	8 (203)	31/64 (12)	8 (203)	37/64 (15)
8 (2.438)	8 (203)	9/32 (7)	8 (203)	3/8 (10)	8 (203)	29/64 (12)	8 (203)	35/64 (14)
8.5 (2.591)	8 (203)	17/64 (7)	8 (203)	23/64 (9)	8 (203)	27/64 (11)	8 (203)	33/64 (13)
9 (2.743)	8 (203)	1/4 (6)	8 (203)	11/32 (9)	8 (203)	13/32 (10)	8 (203)	31/64 (12)
9.5 (2.896)	8 (203)	15/64 (6)	16 (406)	41/64 (16)	8 (203)	25/64 (10)	8 (203)	29/64 (12)
10 (3.048)	16 (406)	29/64 (12)	16 (406)	39/64 (15)	8 (203)	23/64 (9)	8 (203)	7/16 (11)
10.5 (3.200)	16 (406)	7/16 (11)	16 (406)	37/64 (15)	8 (203)	11/32 (9)	8 (203)	13/32 (10)
11 (3.353)	16 (406)	27/64 (11)	16 (406)	35/64 (14)	8 (203)	21/64 (8)	8 (203)	25/64 (10)
11.5 (3.505)	16 (406)	25/64 (10)	16 (406)	17/32 (13)	8 (203)	5/16 (8)	8 (203)	3/8 (10)
12 (3.658)	16 (406)	3/8 (10)	16 (406)	1/2 (13)	8 (203)	19/64 (8)	8 (203)	23/64 (9)
12.5 (3.810)	16 (406)	23/64 (9)	16 (406)	31/64 (12)	16 (406)	37/64 (15)	8 (203)	11/32 (9)
13 (3.962)	16 (406)	11/32 (9)	16 (406)	15/32 (12)	8 (203)	9/32 (7)	8 (203)	21/64 (8)
13.5 (4.115)	16 (406)	21/64 (8)	16 (406)	29/64 (12)	16 (406)	17/32 (13)	8 (203)	5/16 (8)
14 (4.267)	16 (406)	21/64 (8)	16 (406)	7/16 (11)	8 (203)	1/4 (6)	16 (406)	39/64 (15)
14.5 (4.420)	16 (406)	5/16 (8)	16 (406)	27/64 (11)	8 (203)	1/4 (6)	16 (406)	19/32 (15)
15 (4.572)	16 (406)	19/64 (8)	16 (406)	13/32 (10)	8 (203)	15/64 (6)	16 (406)	37/64 (15)
15.5 (4.724)	16 (406)	19/64 (8)	16 (406)	25/64 (10)	8 (203)	15/64 (6)	16 (406)	35/64 (14)
16 (4.877)	24 (610)	27/64 (11)	16 (406)	3/8 (10)	8 (203)	7/32 (6)	16 (406)	17/32 (13)
16.5 (5.029)	24 (610)	13/32 (10)	16 (406)	23/64 (9)	8 (203)	7/32 (6)	16 (406)	33/64 (13)
17 (5.182)	24 (610)	13/32 (10)	16 (406)	23/64 (9)	16 (406)	27/64 (11)	16 (406)	1/2 (13)
17.5 (5.334)	24 (610)	25/64 (10)	24 (610)	33/64 (13)	16 (406)	13/32 (10)	16 (406)	31/64 (12)
18 (5.486)	24 (610)	3/8 (10)	24 (610)	1/2 (13)	16 (406)	13/32 (10)	16 (406)	15/32 (12)
18.5 (5.639)	24 (610)	23/64 (9)	24 (610)	31/64 (12)	16 (406)	25/64 (10)	16 (406)	15/32 (12)
19 (5.791)	24 (610)	23/64 (9)	24 (610)	15/32 (12)	16 (406)	3/8 (10)	16 (406)	29/64 (12)

2.19 – RADIUS WALLS CONTINUED

Outside Radius, ft. (m)	Form Cavity Width							
	4" (102mm)		6.25" (159mm)		8" (203mm)		10" (254mm)	
	C, in. (mm)	A, in. (mm)	C, in. (mm)	A, in. (mm)	C, in. (mm)	A, in. (mm)	C, in. (mm)	A, in. (mm)
19.5 (5.944)	24 (610)	11/32 (9)	24 (610)	15/32 (12)	16 (406)	3/8 (10)	16 (406)	7/16 (11)
20 (6.096)	24 (610)	11/32 (9)	24 (610)	29/64 (12)	16 (406)	23/64 (9)	16 (406)	27/64 (11)
20.5 (6.248)	24 (610)	21/64 (8)	24 (610)	7/16 (11)	16 (406)	11/32 (9)	16 (406)	27/64 (11)
21 (6.401)	24 (610)	21/64 (8)	24 (610)	7/16 (11)	16 (406)	11/32 (9)	16 (406)	13/32 (10)
21.5 (6.553)	24 (610)	5/16 (8)	24 (610)	27/64 (11)	16 (406)	21/64 (8)	16 (406)	25/64 (10)
22 (6.706)	24 (610)	5/16 (8)	24 (610)	13/32 (10)	16 (406)	21/64 (8)	16 (406)	25/64 (10)
22.5 (6.858)	24 (610)	19/64 (8)	24 (610)	13/32 (10)	16 (406)	5/16 (8)	16 (406)	3/8 (10)
23 (7.010)	24 (610)	19/64 (8)	24 (610)	25/64 (10)	16 (406)	5/16 (8)	16 (406)	3/8 (10)
23.5 (7.163)	24 (610)	9/32 (7)	24 (610)	25/64 (10)	24 (610)	29/64 (12)	16 (406)	23/64 (9)
24 (7.315)	24 (610)	9/32 (7)	24 (610)	3/8 (10)	24 (610)	29/64 (12)	16 (406)	23/64 (9)
24.5 (7.468)	24 (610)	9/32 (7)	48 (1,219)	47/64 (19)	24 (610)	7/16 (11)	16 (406)	11/32 (9)
25 (7.620)	24 (610)	17/64 (7)	48 (1,219)	23/32 (18)	24 (610)	7/16 (11)	16 (406)	11/32 (9)
25.5 (7.772)	24 (610)	17/64 (7)	48 (1,219)	45/64 (18)	24 (610)	27/64 (11)	16 (406)	21/64 (8)
26 (7.925)	48 (1,219)	33/64 (13)	48 (1,219)	45/64 (18)	24 (610)	13/32 (10)	16 (406)	21/64 (8)
26.5 (8.077)	48 (1,219)	33/64 (13)	48 (1,219)	11/16 (17)	24 (610)	13/32 (10)	16 (406)	5/16 (8)
27 (8.230)	48 (1,219)	1/2 (13)	48 (1,219)	43/64 (17)	24 (610)	25/64 (10)	16 (406)	5/16 (8)
27.5 (8.382)	48 (1,219)	1/2 (13)	48 (1,219)	21/32 (17)	24 (610)	25/64 (10)	16 (406)	5/16 (8)
28 (8.534)	48 (1,219)	31/64 (12)	48 (1,219)	41/64 (16)	24 (610)	25/64 (10)	16 (406)	19/64 (8)
28.5 (8.687)	48 (1,219)	15/32 (12)	48 (1,219)	41/64 (16)	24 (610)	3/8 (10)	24 (610)	29/64 (12)
29 (8.839)	48 (1,219)	15/32 (12)	48 (1,219)	5/8 (16)	24 (610)	3/8 (10)	24 (610)	7/16 (11)
29.5 (8.992)	48 (1,219)	29/64 (12)	48 (1,219)	39/64 (15)	24 (610)	23/64 (9)	24 (610)	7/16 (11)
30 (9.144)	48 (1,219)	29/64 (12)	48 (1,219)	39/64 (15)	24 (610)	23/64 (9)	24 (610)	27/64 (11)
30.5 (9.296)	48 (1,219)	7/16 (11)	48 (1,219)	19/32 (15)	48 (1,219)	45/64 (18)	24 (610)	27/64 (11)
31 (9.449)	48 (1,219)	7/16 (11)	48 (1,219)	37/64 (15)	48 (1,219)	45/64 (18)	24 (610)	13/32 (10)

Outside Radius, ft. (m)	Form Cavity Width							
	4" (102mm)		6.25" (159mm)		8" (203mm)		10" (254mm)	
	C, in. (mm)	A, in. (mm)	C, in. (mm)	A, in. (mm)	C, in. (mm)	A, in. (mm)	C, in. (mm)	A, in. (mm)
31.5 (9.601)	48 (1,219)	27/64 (11)	48 (1,219)	37/64 (15)	48 (1,219)	11/16 (17)	24 (610)	13/32 (10)
32 (9.754)	48 (1,219)	27/64 (11)	48 (1,219)	9/16 (14)	48 (1,219)	43/64 (17)	24 (610)	25/64 (10)
32.5 (9.906)	48 (1,219)	27/64 (11)	48 (1,219)	9/16 (14)	48 (1,219)	21/32 (17)	24 (610)	25/64 (10)
33 (10.058)	48 (1,219)	13/32 (10)	48 (1,219)	35/64 (14)	48 (1,219)	21/32 (17)	24 (610)	25/64 (10)
33.5 (10.211)	48 (1,219)	13/32 (10)	48 (1,219)	17/32 (13)	48 (1,219)	41/64 (16)	24 (610)	3/8 (10)
34 (10.363)	48 (1,219)	25/64 (10)	48 (1,219)	17/32 (13)	48 (1,219)	41/64 (16)	24 (610)	3/8 (10)
34.5 (10.516)	48 (1,219)	25/64 (10)	48 (1,219)	33/64 (13)	48 (1,219)	5/8 (16)	24 (610)	3/8 (10)
35 (10.668)	48 (1,219)	25/64 (10)	48 (1,219)	33/64 (13)	48 (1,219)	39/64 (15)	24 (610)	23/64 (9)
35.5 (10.820)	48 (1,219)	3/8 (10)	48 (1,219)	1/2 (13)	48 (1,219)	39/64 (15)	24 (610)	23/64 (9)
36 (10.973)	48 (1,219)	3/8 (10)	48 (1,219)	1/2 (13)	48 (1,219)	19/32 (15)	24 (610)	23/64 (9)
36.5 (11.125)	48 (1,219)	3/8 (10)	48 (1,219)	1/2 (13)	48 (1,219)	19/32 (15)	24 (610)	11/32 (9)
37 (11.278)	48 (1,219)	23/64 (9)	48 (1,219)	31/64 (12)	48 (1,219)	37/64 (15)	24 (610)	11/32 (9)
37.5 (11.430)	48 (1,219)	23/64 (9)	48 (1,219)	31/64 (12)	48 (1,219)	37/64 (15)	24 (610)	11/32 (9)
38 (11.582)	48 (1,219)	23/64 (9)	48 (1,219)	15/32 (12)	48 (1,219)	9/16 (14)	24 (610)	21/64 (8)
38.5 (11.735)	48 (1,219)	11/32 (9)	48 (1,219)	15/32 (12)	48 (1,219)	9/16 (14)	24 (610)	21/64 (8)
39 (11.887)	48 (1,219)	11/32 (9)	48 (1,219)	15/32 (12)	48 (1,219)	35/64 (14)	24 (610)	21/64 (8)
39.5 (12.040)	48 (1,219)	11/32 (9)	48 (1,219)	29/64 (12)	48 (1,219)	35/64 (14)	24 (610)	21/64 (8)
40 (12.192)	48 (1,219)	11/32 (9)	48 (1,219)	29/64 (12)	48 (1,219)	17/32 (13)	24 (610)	5/16 (8)
40.5 (12.344)	48 (1,219)	21/64 (8)	48 (1,219)	7/16 (11)	48 (1,219)	17/32 (13)	48 (1,219)	5/8 (16)
41 (12.497)	48 (1,219)	21/64 (8)	48 (1,219)	7/16 (11)	48 (1,219)	17/32 (13)	48 (1,219)	5/8 (16)
41.5 (12.649)	48 (1,219)	21/64 (8)	48 (1,219)	7/16 (11)	48 (1,219)	33/64 (13)	48 (1,219)	39/64 (15)
42 (12.802)	48 (1,219)	5/16 (8)	48 (1,219)	27/64 (11)	48 (1,219)	33/64 (13)	48 (1,219)	39/64 (15)
42.5 (12.954)	48 (1,219)	5/16 (8)	48 (1,219)	27/64 (11)	48 (1,219)	1/2 (13)	48 (1,219)	19/32 (15)
43 (13.106)	48 (1,219)	5/16 (8)	48 (1,219)	27/64 (11)	48 (1,219)	1/2 (13)	48 (1,219)	19/32 (15)

2.19 – RADIUS WALLS CONTINUED

Outside Radius, ft. (m)	Form Cavity Width							
	4" (102mm)		6.25" (159mm)		8" (203mm)		10" (254mm)	
	C, in. (mm)	A, in. (mm)	C, in. (mm)	A, in. (mm)	C, in. (mm)	A, in. (mm)	C, in. (mm)	A, in. (mm)
43.5 (13.259)	48 (1,219)	5/16 (8)	48 (1,219)	13/32 (10)	48 (1,219)	1/2 (13)	48 (1,219)	19/32 (15)
44 (13.411)	48 (1,219)	5/16 (8)	48 (1,219)	13/32 (10)	48 (1,219)	31/64 (12)	48 (1,219)	37/64 (15)
44.5 (13.564)	48 (1,219)	19/64 (8)	48 (1,219)	13/32 (10)	48 (1,219)	31/64 (12)	48 (1,219)	37/64 (15)
45 (13.716)	48 (1,219)	19/64 (8)	48 (1,219)	13/32 (10)	48 (1,219)	31/64 (12)	48 (1,219)	9/16 (14)
45.5 (13.868)	48 (1,219)	19/64 (8)	48 (1,219)	25/64 (10)	48 (1,219)	15/32 (12)	48 (1,219)	9/16 (14)
46 (14.021)	48 (1,219)	19/64 (8)	48 (1,219)	25/64 (10)	48 (1,219)	15/32 (12)	48 (1,219)	35/64 (14)
46.5 (14.173)	48 (1,219)	9/32 (7)	48 (1,219)	25/64 (10)	48 (1,219)	15/32 (12)	48 (1,219)	35/64 (14)
47 (14.326)	48 (1,219)	9/32 (7)	48 (1,219)	3/8 (10)	48 (1,219)	29/64 (12)	48 (1,219)	35/64 (14)
47.5 (14.478)	48 (1,219)	9/32 (7)	48 (1,219)	3/8 (10)	48 (1,219)	29/64 (12)	48 (1,219)	17/32 (13)
48 (14.630)	48 (1,219)	9/32 (7)	48 (1,219)	3/8 (10)	48 (1,219)	29/64 (12)	48 (1,219)	17/32 (13)
48.5 (14.783)	48 (1,219)	9/32 (7)	48 (1,219)	3/8 (10)	48 (1,219)	7/16 (11)	48 (1,219)	17/32 (13)
49 (14.935)	48 (1,219)	17/64 (7)	48 (1,219)	23/64 (9)	48 (1,219)	7/16 (11)	48 (1,219)	33/64 (13)
49.5 (15.088)	48 (1,219)	17/64 (7)	48 (1,219)	23/64 (9)	48 (1,219)	7/16 (11)	48 (1,219)	33/64 (13)
50 (15.240)	48 (1,219)	17/64 (7)	48 (1,219)	23/64 (9)	48 (1,219)	27/64 (11)	48 (1,219)	33/64 (13)
50.5 (15.392)	48 (1,219)	17/64 (7)	48 (1,219)	23/64 (9)	48 (1,219)	27/64 (11)	48 (1,219)	1/2 (13)
51 (15.545)	48 (1,219)	17/64 (7)	48 (1,219)	11/32 (9)	48 (1,219)	27/64 (11)	48 (1,219)	1/2 (13)
51.5 (15.697)	48 (1,219)	17/64 (7)	48 (1,219)	11/32 (9)	48 (1,219)	27/64 (11)	48 (1,219)	1/2 (13)
52 (15.850)	48 (1,219)	1/4 (6)	48 (1,219)	11/32 (9)	48 (1,219)	13/32 (10)	48 (1,219)	31/64 (12)
52.5 (16.002)	48 (1,219)	1/4 (6)	48 (1,219)	11/32 (9)	48 (1,219)	13/32 (10)	48 (1,219)	31/64 (12)
53 (16.154)	48 (1,219)	1/4 (6)	48 (1,219)	11/32 (9)	48 (1,219)	13/32 (10)	48 (1,219)	31/64 (12)
53.5 (16.307)	48 (1,219)	1/4 (6)	48 (1,219)	21/64 (8)	48 (1,219)	13/32 (10)	48 (1,219)	15/32 (12)
54 (16.459)	48 (1,219)	1/4 (6)	48 (1,219)	21/64 (8)	48 (1,219)	25/64 (10)	48 (1,219)	15/32 (12)
54.5 (16.612)	48 (1,219)	1/4 (6)	48 (1,219)	21/64 (8)	48 (1,219)	25/64 (10)	48 (1,219)	15/32 (12)
55 (16.764)	48 (1,219)	1/4 (6)	48 (1,219)	21/64 (8)	48 (1,219)	25/64 (10)	48 (1,219)	15/32 (12)

Outside Radius, ft. (m)	Form Cavity Width							
	4" (102mm)		6.25" (159mm)		8" (203mm)		10" (254mm)	
	C, in. (mm)	A, in. (mm)	C, in. (mm)	A, in. (mm)	C, in. (mm)	A, in. (mm)	C, in. (mm)	A, in. (mm)
55.5 (16.916)	48 (1,219)	15/64 (6)	48 (1,219)	21/64 (8)	48 (1,219)	25/64 (10)	48 (1,219)	29/64 (12)
56 (17.069)	48 (1,219)	15/64 (6)	48 (1,219)	5/16 (8)	48 (1,219)	3/8 (10)	48 (1,219)	29/64 (12)
56.5 (17.221)	48 (1,219)	15/64 (6)	48 (1,219)	5/16 (8)	48 (1,219)	3/8 (10)	48 (1,219)	29/64 (12)
57 (17.374)	48 (1,219)	15/64 (6)	48 (1,219)	5/16 (8)	48 (1,219)	3/8 (10)	48 (1,219)	29/64 (12)
57.5 (17.526)	48 (1,219)	15/64 (6)	48 (1,219)	5/16 (8)	48 (1,219)	3/8 (10)	48 (1,219)	7/16 (11)
58 (17.678)	48 (1,219)	15/64 (6)	48 (1,219)	5/16 (8)	48 (1,219)	3/8 (10)	48 (1,219)	7/16 (11)
58.5 (17.831)	48 (1,219)	15/64 (6)	48 (1,219)	5/16 (8)	48 (1,219)	23/64 (9)	48 (1,219)	7/16 (11)
59 (17.983)	48 (1,219)	7/32 (6)	48 (1,219)	19/64 (8)	48 (1,219)	23/64 (9)	48 (1,219)	7/16 (11)
59.5 (18.136)	48 (1,219)	7/32 (6)	48 (1,219)	19/64 (8)	48 (1,219)	23/64 (9)	48 (1,219)	27/64 (11)
60 (18.288)	48 (1,219)	7/32 (6)	48 (1,219)	19/64 (8)	48 (1,219)	23/64 (9)	48 (1,219)	27/64 (11)
60.5 (18.440)	48 (1,219)	7/32 (6)	48 (1,219)	19/64 (8)	48 (1,219)	23/64 (9)	48 (1,219)	27/64 (11)
61 (18.593)	48 (1,219)	7/32 (6)	48 (1,219)	19/64 (8)	48 (1,219)	11/32 (9)	48 (1,219)	27/64 (11)
61.5 (18.745)	48 (1,219)	7/32 (6)	48 (1,219)	19/64 (8)	48 (1,219)	11/32 (9)	48 (1,219)	13/32 (10)
62 (18.898)	48 (1,219)	7/32 (6)	48 (1,219)	9/32 (7)	48 (1,219)	11/32 (9)	48 (1,219)	13/32 (10)
62.5 (19.050)	48 (1,219)	7/32 (6)	48 (1,219)	9/32 (7)	48 (1,219)	11/32 (9)	48 (1,219)	13/32 (10)
63 (19.202)	48 (1,219)	7/32 (6)	48 (1,219)	9/32 (7)	48 (1,219)	11/32 (9)	48 (1,219)	13/32 (10)
63.5 (19.355)	48 (1,219)	13/64 (5)	48 (1,219)	9/32 (7)	48 (1,219)	11/32 (9)	48 (1,219)	13/32 (10)
64 (19.507)	48 (1,219)	13/64 (5)	48 (1,219)	9/32 (7)	48 (1,219)	21/64 (8)	48 (1,219)	25/64 (10)
64.5 (19.660)	48 (1,219)	13/64 (5)	48 (1,219)	9/32 (7)	48 (1,219)	21/64 (8)	48 (1,219)	25/64 (10)
65 (19.812)	48 (1,219)	13/64 (5)	48 (1,219)	9/32 (7)	48 (1,219)	21/64 (8)	48 (1,219)	25/64 (10)
65.5 (19.964)	48 (1,219)	13/64 (5)	48 (1,219)	17/64 (7)	48 (1,219)	21/64 (8)	48 (1,219)	25/64 (10)
66 (20.117)	48 (1,219)	13/64 (5)	48 (1,219)	17/64 (7)	48 (1,219)	21/64 (8)	48 (1,219)	25/64 (10)
66.5 (20.269)	48 (1,219)	13/64 (5)	48 (1,219)	17/64 (7)	48 (1,219)	21/64 (8)	48 (1,219)	3/8 (10)
67 (20.422)	48 (1,219)	13/64 (5)	48 (1,219)	17/64 (7)	48 (1,219)	5/16 (8)	48 (1,219)	3/8 (10)

2.19 – RADIUS WALLS CONTINUED

Outside Radius, ft. (m)	Form Cavity Width							
	4" (102mm)		6.25" (159mm)		8" (203mm)		10" (254mm)	
	C, in. (mm)	A, in. (mm)	C, in. (mm)	A, in. (mm)	C, in. (mm)	A, in. (mm)	C, in. (mm)	A, in. (mm)
67.5 (20.574)	48 (1,219)	13/64 (5)	48 (1,219)	17/64 (7)	48 (1,219)	5/16 (8)	48 (1,219)	3/8 (10)
68 (20.726)	48 (1,219)	13/64 (5)	48 (1,219)	17/64 (7)	48 (1,219)	5/16 (8)	48 (1,219)	3/8 (10)
68.5 (20.879)	48 (1,219)	3/16 (5)	48 (1,219)	17/64 (7)	48 (1,219)	5/16 (8)	48 (1,219)	3/8 (10)
69 (21.031)	48 (1,219)	3/16 (5)	48 (1,219)	17/64 (7)	48 (1,219)	5/16 (8)	48 (1,219)	23/64 (9)
69.5 (21.184)	48 (1,219)	3/16 (5)	48 (1,219)	1/4 (6)	48 (1,219)	5/16 (8)	48 (1,219)	23/64 (9)
70 (21.336)	48 (1,219)	3/16 (5)	48 (1,219)	1/4 (6)	48 (1,219)	19/64 (8)	48 (1,219)	23/64 (9)
70.5 (21.488)	48 (1,219)	3/16 (5)	48 (1,219)	1/4 (6)	48 (1,219)	19/64 (8)	48 (1,219)	23/64 (9)
71 (21.641)	48 (1,219)	3/16 (5)	48 (1,219)	1/4 (6)	48 (1,219)	19/64 (8)	48 (1,219)	23/64 (9)
71.5 (21.793)	48 (1,219)	3/16 (5)	48 (1,219)	1/4 (6)	48 (1,219)	19/64 (8)	48 (1,219)	23/64 (9)
72 (21.946)	48 (1,219)	3/16 (5)	48 (1,219)	1/4 (6)	48 (1,219)	19/64 (8)	48 (1,219)	11/32 (9)
72.5 (22.098)	48 (1,219)	3/16 (5)	48 (1,219)	1/4 (6)	48 (1,219)	19/64 (8)	48 (1,219)	11/32 (9)
73 (22.250)	48 (1,219)	3/16 (5)	48 (1,219)	1/4 (6)	48 (1,219)	19/64 (8)	48 (1,219)	11/32 (9)
73.5 (22.403)	48 (1,219)	3/16 (5)	48 (1,219)	15/64 (6)	48 (1,219)	19/64 (8)	48 (1,219)	11/32 (9)
74 (22.555)	48 (1,219)	11/64 (4)	48 (1,219)	15/64 (6)	48 (1,219)	9/32 (7)	48 (1,219)	11/32 (9)
74.5 (22.708)	48 (1,219)	11/64 (4)	48 (1,219)	15/64 (6)	48 (1,219)	9/32 (7)	48 (1,219)	11/32 (9)
75 (22.860)	48 (1,219)	11/64 (4)	48 (1,219)	15/64 (6)	48 (1,219)	9/32 (7)	48 (1,219)	11/32 (9)
75.5 (23.012)	48 (1,219)	11/64 (4)	48 (1,219)	15/64 (6)	48 (1,219)	9/32 (7)	48 (1,219)	21/64 (8)
76 (23.165)	48 (1,219)	11/64 (4)	48 (1,219)	15/64 (6)	48 (1,219)	9/32 (7)	48 (1,219)	21/64 (8)
76.5 (23.317)	48 (1,219)	11/64 (4)	48 (1,219)	15/64 (6)	48 (1,219)	9/32 (7)	48 (1,219)	21/64 (8)
77 (23.470)	48 (1,219)	11/64 (4)	48 (1,219)	15/64 (6)	48 (1,219)	9/32 (7)	48 (1,219)	21/64 (8)
77.5 (23.622)	48 (1,219)	11/64 (4)	48 (1,219)	15/64 (6)	48 (1,219)	9/32 (7)	48 (1,219)	21/64 (8)
78 (23.774)	48 (1,219)	11/64 (4)	48 (1,219)	15/64 (6)	48 (1,219)	17/64 (7)	48 (1,219)	21/64 (8)
78.5 (23.927)	48 (1,219)	11/64 (4)	48 (1,219)	7/32 (6)	48 (1,219)	17/64 (7)	48 (1,219)	21/64 (8)
79 (24.079)	48 (1,219)	11/64 (4)	48 (1,219)	7/32 (6)	48 (1,219)	17/64 (7)	48 (1,219)	5/16 (8)

Outside Radius, ft. (m)	Form Cavity Width							
	4" (102mm)		6.25" (159mm)		8" (203mm)		10" (254mm)	
	C, in. (mm)	A, in. (mm)	C, in. (mm)	A, in. (mm)	C, in. (mm)	A, in. (mm)	C, in. (mm)	A, in. (mm)
79.5 (24.232)	48 (1,219)	11/64 (4)	48 (1,219)	7/32 (6)	48 (1,219)	17/64 (7)	48 (1,219)	5/16 (8)
80 (24.384)	48 (1,219)	11/64 (4)	48 (1,219)	7/32 (6)	48 (1,219)	17/64 (7)	48 (1,219)	5/16 (8)
80.5 (24.536)	48 (1,219)	11/64 (4)	48 (1,219)	7/32 (6)	48 (1,219)	17/64 (7)	48 (1,219)	5/16 (8)
81 (24.689)	48 (1,219)	5/32 (4)	48 (1,219)	7/32 (6)	48 (1,219)	17/64 (7)	48 (1,219)	5/16 (8)
81.5 (24.841)	48 (1,219)	5/32 (4)	48 (1,219)	7/32 (6)	48 (1,219)	17/64 (7)	48 (1,219)	5/16 (8)
82 (24.994)	48 (1,219)	5/32 (4)	48 (1,219)	7/32 (6)	48 (1,219)	17/64 (7)	48 (1,219)	5/16 (8)
82.5 (25.146)	48 (1,219)	5/32 (4)	48 (1,219)	7/32 (6)	48 (1,219)	1/4 (6)	48 (1,219)	5/16 (8)
83 (25.298)	48 (1,219)	5/32 (4)	48 (1,219)	7/32 (6)	48 (1,219)	1/4 (6)	48 (1,219)	19/64 (8)
83.5 (25.451)	48 (1,219)	5/32 (4)	48 (1,219)	7/32 (6)	48 (1,219)	1/4 (6)	48 (1,219)	19/64 (8)
84 (25.603)	48 (1,219)	5/32 (4)	48 (1,219)	7/32 (6)	48 (1,219)	1/4 (6)	48 (1,219)	19/64 (8)
84.5 (25.756)	48 (1,219)	5/32 (4)	48 (1,219)	13/64 (5)	48 (1,219)	1/4 (6)	48 (1,219)	19/64 (8)
85 (25.908)	48 (1,219)	5/32 (4)	48 (1,219)	13/64 (5)	48 (1,219)	1/4 (6)	48 (1,219)	19/64 (8)
85.5 (26.060)	48 (1,219)	5/32 (4)	48 (1,219)	13/64 (5)	48 (1,219)	1/4 (6)	48 (1,219)	19/64 (8)
86 (26.213)	48 (1,219)	5/32 (4)	48 (1,219)	13/64 (5)	48 (1,219)	1/4 (6)	48 (1,219)	19/64 (8)
86.5 (26.365)	48 (1,219)	5/32 (4)	48 (1,219)	13/64 (5)	48 (1,219)	1/4 (6)	48 (1,219)	19/64 (8)
87 (26.518)	48 (1,219)	5/32 (4)	48 (1,219)	13/64 (5)	48 (1,219)	1/4 (6)	48 (1,219)	19/64 (8)
87.5 (26.670)	48 (1,219)	5/32 (4)	48 (1,219)	13/64 (5)	48 (1,219)	1/4 (6)	48 (1,219)	9/32 (7)
88 (26.822)	48 (1,219)	5/32 (4)	48 (1,219)	13/64 (5)	48 (1,219)	15/64 (6)	48 (1,219)	9/32 (7)
88.5 (26.975)	48 (1,219)	5/32 (4)	48 (1,219)	13/64 (5)	48 (1,219)	15/64 (6)	48 (1,219)	9/32 (7)
89 (27.127)	48 (1,219)	9/64 (4)	48 (1,219)	13/64 (5)	48 (1,219)	15/64 (6)	48 (1,219)	9/32 (7)
89.5 (27.280)	48 (1,219)	9/64 (4)	48 (1,219)	13/64 (5)	48 (1,219)	15/64 (6)	48 (1,219)	9/32 (7)
90 (27.432)	48 (1,219)	9/64 (4)	48 (1,219)	13/64 (5)	48 (1,219)	15/64 (6)	48 (1,219)	9/32 (7)
90.5 (27.584)	48 (1,219)	9/64 (4)	48 (1,219)	13/64 (5)	48 (1,219)	15/64 (6)	48 (1,219)	9/32 (7)
91 (27.737)	48 (1,219)	9/64 (4)	48 (1,219)	3/16 (5)	48 (1,219)	15/64 (6)	48 (1,219)	9/32 (7)

2.19 – RADIUS WALLS CONTINUED

Outside Radius, ft. (m)	Form Cavity Width							
	4" (102mm)		6.25" (159mm)		8" (203mm)		10" (254mm)	
	C, in. (mm)	A, in. (mm)	C, in. (mm)	A, in. (mm)	C, in. (mm)	A, in. (mm)	C, in. (mm)	A, in. (mm)
91.5 (27.889)	48 (1,219)	9/64 (4)	48 (1,219)	3/16 (5)	48 (1,219)	15/64 (6)	48 (1,219)	9/32 (7)
92 (28.042)	48 (1,219)	9/64 (4)	48 (1,219)	3/16 (5)	48 (1,219)	15/64 (6)	48 (1,219)	9/32 (7)
92.5 (28.194)	48 (1,219)	9/64 (4)	48 (1,219)	3/16 (5)	48 (1,219)	15/64 (6)	48 (1,219)	17/64 (7)
93 (28.346)	48 (1,219)	9/64 (4)	48 (1,219)	3/16 (5)	48 (1,219)	15/64 (6)	48 (1,219)	17/64 (7)
93.5 (28.499)	48 (1,219)	9/64 (4)	48 (1,219)	3/16 (5)	48 (1,219)	15/64 (6)	48 (1,219)	17/64 (7)
94 (28.651)	48 (1,219)	9/64 (4)	48 (1,219)	3/16 (5)	48 (1,219)	7/32 (6)	48 (1,219)	17/64 (7)
94.5 (28.804)	48 (1,219)	9/64 (4)	48 (1,219)	3/16 (5)	48 (1,219)	7/32 (6)	48 (1,219)	17/64 (7)
95 (28.956)	48 (1,219)	9/64 (4)	48 (1,219)	3/16 (5)	48 (1,219)	7/32 (6)	48 (1,219)	17/64 (7)
95.5 (29.108)	48 (1,219)	9/64 (4)	48 (1,219)	3/16 (5)	48 (1,219)	7/32 (6)	48 (1,219)	17/64 (7)
96 (29.261)	48 (1,219)	9/64 (4)	48 (1,219)	3/16 (5)	48 (1,219)	7/32 (6)	48 (1,219)	17/64 (7)
96.5 (29.413)	48 (1,219)	9/64 (4)	48 (1,219)	3/16 (5)	48 (1,219)	7/32 (6)	48 (1,219)	17/64 (7)
97 (29.566)	48 (1,219)	9/64 (4)	48 (1,219)	3/16 (5)	48 (1,219)	7/32 (6)	48 (1,219)	17/64 (7)
97.5 (29.718)	48 (1,219)	9/64 (4)	48 (1,219)	3/16 (5)	48 (1,219)	7/32 (6)	48 (1,219)	17/64 (7)
98 (29.870)	48 (1,219)	9/64 (4)	48 (1,219)	3/16 (5)	48 (1,219)	7/32 (6)	48 (1,219)	1/4 (6)
98.5 (30.023)	48 (1,219)	9/64 (4)	48 (1,219)	11/64 (4)	48 (1,219)	7/32 (6)	48 (1,219)	1/4 (6)
99 (30.175)	48 (1,219)	1/8 (3)	48 (1,219)	11/64 (4)	48 (1,219)	7/32 (6)	48 (1,219)	1/4 (6)
99.5 (30.328)	48 (1,219)	1/8 (3)	48 (1,219)	11/64 (4)	48 (1,219)	7/32 (6)	48 (1,219)	1/4 (6)
100 (30.480)	48 (1,219)	1/8 (3)	48 (1,219)	11/64 (4)	48 (1,219)	7/32 (6)	48 (1,219)	1/4 (6)

2.20 – TALL WALLS







Logix walls can be constructed to any height provided proper engineering and construction methods are used.

Logix tall walls should be designed in accordance with ACI 318 or CAN/CSA A23.3.

Constructing tall walls follows the same basic steps described throughout Section 2. In addition, building taller walls is done in much the same way as concrete pours using traditional formwork. Generally, Logix blocks are stacked and braced, normally 10 to 12 feet high. The concrete is then placed. After the concrete sets Logix blocks are then stacked another 10 to 12 feet, and bracing is raised or extended higher to support the wall, as well as keeping the wall plumb. This process is continued until the specified wall height is reached.

To ensure a smooth build, the following items should be considered:

- Load tables in **Section 6** can be used as a design aid for both the builder and designer. However, tall wall designs should be reviewed and approved by a local licensed professional engineer.
- In higher wind areas taller walls may require guy wires for additional support. Typically, this will be determined by the engineer of record.
- Proper consolidation of concrete can be achieved by adequate vibrating. However, depending on the drop height, and the steel congestion, external vibration, in addition to internal vibration, should be considered, particularly at corners, openings, and congested areas of rebar. (External vibrators made specifically for ICFs are available. See **Section**

2.21, Supporting Products).

- Since tall walls are typically poured using a pump truck, using a 2 1/2" trimmer hose can provide better control of the concrete pour.
- If required, roughen the surface of all cold joints to ensure a good bond between the surface of the old pour and the subsequent pour. In addition, ensure adequate rebar embedments are provided.
- For the final stage of the pour, a Logix Taper Top block can be used, if required, for the top course of the wall. This provides a larger opening for concrete to flow into the wall and also provides a larger bearing area for supporting elements.
- Several tall wall bracing and alignment systems are available. For more information see **Section 3.2, Tall Wall Bracing Systems**.

NOTE: Both ACI 318 and CAN/CSA A23.3 permit cold joints when concrete is poured in stages.

2.21 – SUPPORTING PRODUCTS

A list of supporting ICF products are shown below. Consult with the listed manufacturer prior to using with Logix Insulated Concrete Forms. Please note: the products listed below does not prohibit the use of Logix ICFs with other supporting products not listed.

FOOTINGS

Product Name	Manufacturer	Contact	Website
Fastfoot	Fab-form Industries	1-888-303-3278	fab-form.com
Form-A-Drain	CertainTeed Corp.	708-301-4449	certainteed.com
Footing Tube	Footing Tube	1-888-929-2011	foottube.com

EXTERIOR FINISHES

Product Name	Manufacturer	Contact	Website
Durock	Alfacing International Ltd.	1-888-238-6345	durock.com
Senerflex	Degussa Wall Systems, Inc.	1-800-221-9255	senergy.cc
Sto EIFS System	Sto Corp.	1-800-221-2397	stocorp.com
GrailCoat	GrailCoat	1-877-472-4528	grailcoat.com
TAFS (Textured Acrylic Finishes	dryvit	1-800-263-3308	dryvit.com
SoftCoat PB System	Total Wall, Inc.	1-888-702-9915	totalwall.com
Akroflex	Omega Products Corp.	602-721-5027	omega-products.com
Impact System	parex	1-800-537-2739	parex.com
PermaCrete	Quality Systems	1-800-607-3762	permacrete.com
Crack Guard	Poly-Wall	1-800-846-3020	poly-wall.com
Protecto Bond	Protecto Wrap	1-800-759-9727	protecowrap.com
WeatherWall Systems	Eco Specialty Products Ltd.	1-888-481-5507	ecocoatings.ca

WATERPROOFING

Product Name	Manufacturer	Contact	Website
System III	Epro	1-800-882-1896	eproserv.com
Blueskin WP2000	Bakor, Inc	1-800-387-9598	bakor.com
Colphene 3000	Soprema, Inc	1-800 567-1492	soprema.com
Delta-MS Clear	Cosella-Dorken Products, Inc.	1-888-4DELTA4	cosella-dorken.com
Platon	Armtec Ltd.	1-800-265-7622	systemplaton.com
Tamko TW60	Tamko, Inc.	1-800-641-4691	tamko.com
Grace waterproofing products	Grace Construction Products	See website	graceconstruction.com
Aqua-Wrap/Green Sheild	Aqua Seal Inc.	1-888-282-3861	aquasealusa.com

CONNECTION SYSTEMS

Product Name	Manufacturer	Contact	Website
ICF Ledger Connector System	Simpson Strong-Tie Co., Inc.	1-800-999-5099	simpsonstrongtie.com
ICF-Connect	ICF-Connect Ltd.	1-866-497-1576	icfconnect.com

ADHESIVE & SEALANTS

Product Name	Manufacturer	Contact	Website
Enerfoam Sealant/Enerbond Adhesive	Dow Chemical Company	1-800-800-FOAM	dow.com/buildingproducts
PL300	Loctite	1-800-624-7767	www.loctiteproducts.com

WALL BRACING & ALIGNMENT SYSTEMS

Product Name	Manufacturer	Contact	Website
Uniscaffold, LLC	Uniscaffold	1-208-791-5624	www.uniscaffold.com
Giraffe Bracing	Giraffe Bracing	1-888-778-2285	www.giraffebracing.com
Plumwall	Plumwall Ltd.	1-905-786-7586	www.plumwall.com
Mono-Brace	Tapco	814-336-6549	www.mono-brace.com
Amazing Brace	Lakeland Group	905-372-7413	www.lakeland-multitrade.com

EXTERNAL VIBRATORS

Product Name	Manufacturer	Contact	Website
Brecon	Brecon Inc.	815-463-8073	http://icfvibrator.com
Arkie Wall Banger	Available from Wind-lock	1-800-872-5625	-

SUPPLIERS OF SUPPORTING ICF PRODUCTS

Company	Contact	Website
Wind-lock	1-800-872-5625	wind-lock.com
Grace Construction Products	See website	graceconstruction.com

3.0 – ALIGNMENT & SCAFFOLDING SYSTEMS

TABLE OF CONTENTS

3.1 – WALL BRACING & ALIGNMENT SYSTEMS..... P. 3-2

3.2 – TALL WALL BRACING SYSTEMS..... P. 3-4

3.3 – TALL WALL BRACING SYSTEMS USING SCAFFOLDING..... P. 3-5

REPRINTED 2017

3.1 – WALL BRACING & ALIGNMENT SYSTEMS

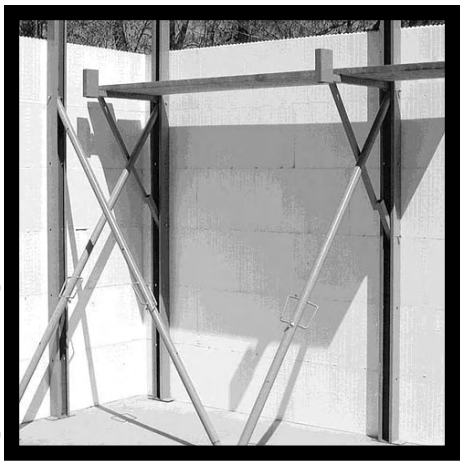





A bracing system provides support for the wall and acts as an alignment system to keep the walls straight and plumb during concrete placement. Typically, the wall alignment system is installed on the inner side of the LOGIX wall.

There are a number of proprietary systems available. However, each bracing unit typically consists of a vertical upright steel channel with slots for attaching screws to the LOGIX webs, a turnbuckle arm, and a scaffold bracket.

Normally, wall bracing systems are installed after placing 2 to 4 courses of LOGIX forms (depending on wind and other conditions). Attach the bracing system to the webs using #10 screws with a hex head. Screws should be snug, but not tight.

Place bracing units no more than 2ft (0.610m) from each corner or wall end, and every 7ft (2.134m) or less thereafter in accordance with OSHA/OHSA requirements. In addition, every door and window opening should be flanked on either side by bracing units, typically installed on the inner side of the LOGIX wall.

STEP 1: Attach the upright steel channel to the LOGIX webs with a #10 screw in each course. The screws should be snug but not tight. Always place screws near the top of the slots to accommodate settling at the interlock during concrete placement.



STEP 2: Attach a turnbuckle arm to the upright with a bolt and then secure to the floor or ground. In light or sandy soils, additional care must be taken to secure diagonal turnbuckle. Ensure wall is close to plumb and threads on the turnbuckle is secured.

STEP 3: The scaffold bracket is then inserted behind the top of the turnbuckle and secured at the bottom with an additional bolt.



STEP 4: Place the appropriate scaffolding planks and rails according to safety regulations. For requirements on toeboard and handrail configuration, consult OSHA/OHSA.

STEP 5: Prior to concrete placement, make certain walls are leaning slightly inward. The wall must not lean out at all.

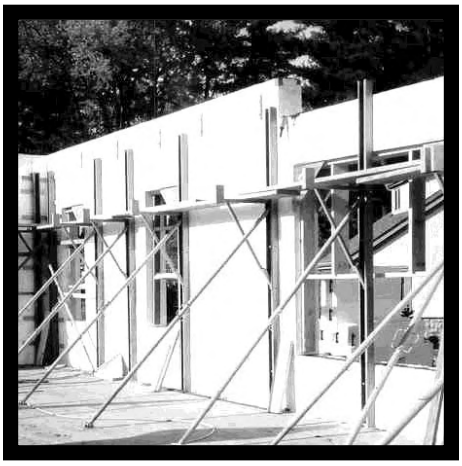

STEP 6: A stringline must be used to achieve straight walls.

STEP 7: Before, during and after concrete placement, the diagonal turnbuckle arm is used to adjust wall straightness to stringline.

3.2 – TALL WALL BRACING SYSTEMS



Tall walls are constructed in much the same way as concrete pours using traditional formwork. In general, the LOGIX blocks are stacked and braced, normally 10 to 12 feet high. The concrete is then placed. After the concrete sets the LOGIX blocks are then stacked another 10 to 12 feet, and bracing is raised or extended higher to support the wall, as well as keeping the wall plumb. This process is continued until the specified wall height is reached.



In higher wind areas taller walls may require guy wires for additional support.

LOGIX can be built to any height using either proprietary bracing systems or traditional scaffolding.

There are a number of proprietary tall wall bracing and alignment systems available. Many of the systems are designed to accommodate walls heights from 30 to 50 feet. For a list of some of these systems see **Section 2.23, Supporting Products**.



NOTE: When using wall bracing systems always follow the manufacturers recommended installation and instructions, including all required federal and local safety guidelines. Users of LOGIX and bracing systems should always follow OSHA/OHSA guidelines.

With minor modifications traditional scaffold (masonry scaffold) systems can also be used as the bracing and alignment system for tall walls (see **Section 3.2**). In addition, more experienced builders may have their own custom bracing systems designed to meet their preferred method of construction.

3.3 – TALL WALL BRACING SYSTEMS USING SCAFFOLDING

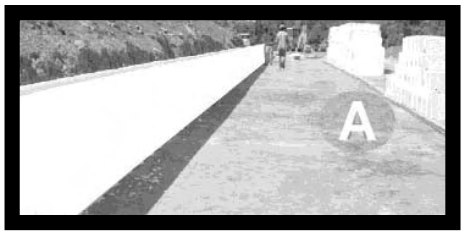

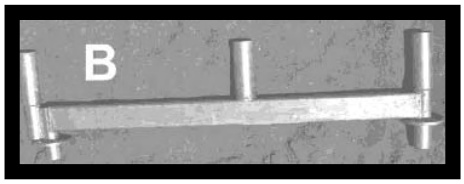

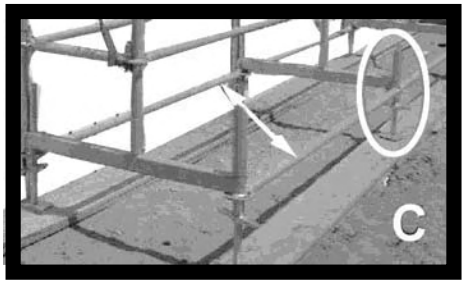

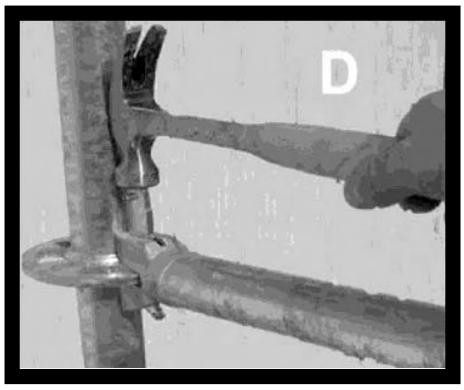

The following installation instructions demonstrates the use of scaffolding as a tall wall bracing and alignment system. The scaffolding system described is available from Form Systems, Inc. For more information contact your local LOGIX representative.

INSTALLATION STEPS

STEP 1: Complete two courses making sure they are straight, level and well anchored (**Figure A**).

STEP 2: The first scaffolding items needed are the base frames and screw jacks. The left end of the base frame as seen in **Figures B and C** is the end that will sit against the forms to allow the screw jacks to be adjusted.

STEP 3: Insert the screw jacks into the base frames as seen in **Figure C**. Create a base frame by attaching two 7ft (2.134m) ledgers (the horizontal pipes) to two base frames. Each ledger end has a wedge to anchor the system together (**Figure D**). To remove, hit from below. Once base frame is in place, level in all directions.

STEP 4: There are two kinds of vertical poles. Poles with the 2/3 rosettes go against the wall. Those with the full rosettes go into the center cup of the base frame (**Figure C**).

3.3 – TALL WALL BRACING SYSTEMS USING SCAFFOLDING CONTINUED

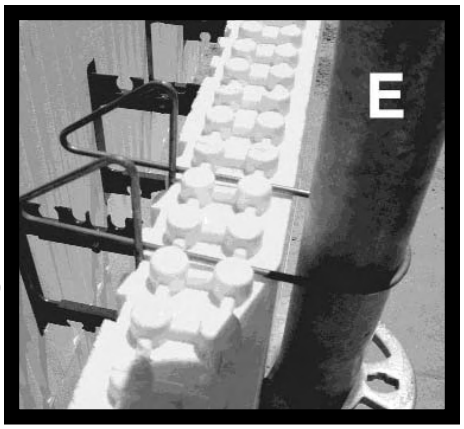

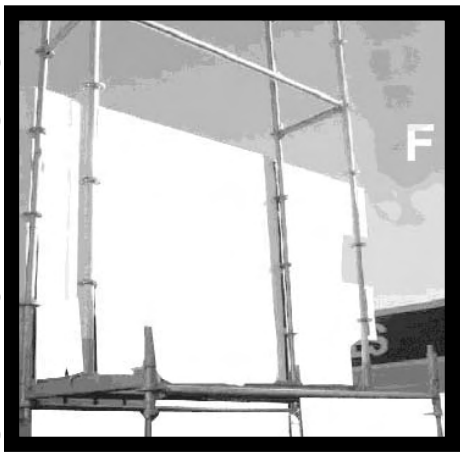



STEP 5: Install the two-foot ledgers that will hold the decks in place on every third rosette from the bottom. Note that the only 7ft (2.134m) ledger required against the wall is on the base frame. The rest of the scaffolding will require 7ft (2.134m) ledgers only on one side (**Figure F**).

STEP 6: Place one wire clip per course at each vertical 2/3 rosette pole (**Figure E**).

STEP 7: Insert 7ft (2.134m) ledgers for railings in the two rosettes above the planks (**Figure G**).

STEP 8: There are two adjustable diagonals. One is 4ft (1.220m) long and is intended to go to the inside of the vertical poles. It's designed to align the wall during the second or third build. For the first build, use the 10ft (3.048m) external adjustable diagonal (**Figure G**).

4.0 – ESTIMATING

TABLE OF CONTENTS

4.1 – ESTIMATING ..... P. 4-3
4.2 – MATERIAL TAKE-OFF LIST ..... P. 4-4
4.3 – FORM UNITS ..... P. 4-5
ESTIMATING STANDARD FORMS AND CORNERS ..... P. 4-5
ESTIMATING BRICK LEDGE FORMS ..... P. 4-7
ESTIMATING DOUBLE TAPER TOP & T
APER TOP FORMS ..... P. 4-7
ESTIMATING HEIGHT ADJUSTERS ..... P. 4-8
ESTIMATING END CAPS ..... P. 4-8
4.4 – CONCRETE ..... P. 4-9
4" WALLS ..... P. 4-9
6.25" WALLS ..... P. 4-9
8" WALLS ..... P. 4-10
10" WALLS ..... P. 4-11
12" WALLS ..... P. 4-11
ADD EXTRA CONCRETE FOR BRICK LEDGES ..... P. 4-12
ADD EXTRA CONCRETE FOR TAPER TOPS ..... P. 4-13
ADD EXTRA CONCRETE FOR
DOUBLE TAPER TOPS ..... P. 4-13
ALTERNATE METHOD FOR
CALCULATING CONCRETE ..... P. 4-13
4.5 – REBAR ..... P. 4-15
4.6 – WATERPROOFING ..... P. 4-16
4.7 – PARGING ..... P. 4-17
4.8 – COURSE HEIGHT TABLE ..... P. 4-18
4.9 – ESTIMATING FORM ..... P. 4-19

4.1 – ESTIMATING

Calculating the number of forms needed is a simple task with LOGIX.

Drawing a wall section on graph paper before estimating a project saves time and effort and is a very helpful thing to do.

An important thing to remember in estimating is that walls with different heights should be calculated separately. As the wall heights change, so do the quantities required.

NOTE: The LOGIX Estimator program is now available for download at **www.logixicf.com.**

4.2 – MATERIAL TAKE-OFF LIST

The material take off is the first step in any estimate.

____ Linear feet of exterior and interior LOGIX walls
____ Height of walls
____ Number of courses in wall
____ Thickness of wall (4", 6.25", 8", 10" or 12")
____ Number of 90° corners (both inside and outside)
____ Number of 45° corner (both inside and outside)
____ Linear feet of Brick Ledge
____ Linear feet of Taper Top
____ Linear feet of Double Taper Top
____ Square feet of parge coating "stucco" (height x length) between grade and siding
____ Square feet of water proofing (height x length) from grade to lap over footing
____ Square feet of door and window openings
____ Linear feet of buck material
____ Number of beam pockets (End Caps)
____ Linear feet of end walls (End Caps)
____ Linear feet of Height Adjusters (both sides of wall)

SQUARE FOOTAGE OF DIFFERENT FORM TYPES

Standard (straight):	5.33sf
Brick Ledge:	5.33sf
Taper Top:	5.33sf
Double Taper Top:	5.33sf
90° Corner:	5.33sf (5.89sf for 10" and 12" corner forms)
45° Corner:	3.90sf
Pilaster:	3.49sf max.
4" Height Adjuster:	0.66sf
Half Height Standard:	2.67sf
Half Height 90° Corner:	2.67sf
Half Height 45° Corner:	1.95sf

4.3 – FORM UNITS

ESTIMATING STANDARD FORMS AND CORNERS

STEP 1: Determine the total lineal feet of walls (both interior and exterior walls that will be built using LOGIX). Add an extra 2ft for every 45° or 90° inside corner to the total lineal feet of walls. With this new lineal footage, multiply by the height of the walls to determine the property's total square footage. When figuring the total square footage of walls with different heights it's easiest to figure each wall separately and then add totals together.

Subtract the total square footage of all window and door openings.

STEP 2: Determine number of 45° forms (**A**) by multiplying number of 45° turns by the number of courses (i.e. 6 courses x 4 turns). Then multiply the number of 45° forms by 3.9 sf/form. Then subtract this from your gross square footage of wall determined in **Step 1**.

If no 45° turns continue with **Step 3**.

STEP 3: Determine number of 90° corner forms (**B**) by multiplying number of 90° turns by the number of courses (i.e. 6 courses x 4 turns). Then multiply the number of 90° forms by 5.33 sf/form (or 5.89sf for 10" or 12" corner forms). Then subtract this from your square footage of wall determined in **Step 2** (if no 45° turns used, then subtract from gross square footage determined in **Step 1**).

STEP 4: Divide square footage of wall determined in **Step 3** by 5.33 to determine gross number of Standard forms required. (**C**)

NOTE: Standard forms are all 16" (406mm) tall and 48" (1220mm) long with a wall area of 5.33sf each. All 90° Corners are 16" tall. The 4", 6.25" and 8" Ninety degree corner forms have one leg that is 16" long, the other 32" long for a total of 48", and a wall area of 5.33sf. The 10" and 12" Ninety degree corner forms have one leg that is 18.5" long, the other 34.5" long for a total of 53", and a wall area of 5.89sf.

A. Number of **45°** forms required: _____

B. Number of **90°** forms required: _____

C. Number of **Standard** forms required: _____

D. Total number of forms required: _____

ESTIMATING BRICK LEDGE FORMS

NOTE: Brick Ledge forms are available in straight units only. Corner applications require miter cutting Brick Ledge forms on site.

Brick Ledge forms only come in 6.25", 8", 10" and 12" cavity sizes.

STEP 1: Measure the total linear feet of Brick Ledge needed and divide by 4 (the length in feet of each block) to determine the total number of Brick Ledge forms needed. When miter cutting Brick Ledge corners, add one Brick Ledge form for waste at each corner to the total Brick Ledge count.

STEP 2: Subtract the number of Brick Ledge forms from the total number of Standard forms determined earlier to avoid ordering too many Standard forms.

ESTIMATING DOUBLE TAPER TOP & TAPER TOP FORMS

NOTE: The above forms are available in straight units only. Corner applications require miter cutting the forms on site.

Taper Top and Double Taper Top forms come in 6.25", 8", 10" or 12" cavity sizes.

Follow **Steps 1 & 2** in **"Estimating Brick Ledge Forms"** to estimate the number of Taper Top or Double Taper Top forms required.

ESTIMATING HEIGHT ADJUSTERS

A 2ft Height Adjuster = 0.66sf. The number of 2ft long Height Adjusters needed is equal to the total linear footage.

NOTES: Height Adjusters come in one size, 4" x 24" x 2.75" thick. Remember to count both sides of the wall. Height Adjusters can be used in window openings to adjust height without cutting standards.

ESTIMATING END CAPS

NOTES: End Caps are 16" tall and 2-1/4" thick . End Caps come in all wall cavity sizes - 4", 6.25", 8", 10" and 12". Use End Caps at end wall applications. Use two End Caps for each beam pocket. Use End Caps for step foundations if necessary. End Caps can be used to form side bucks on door and window openings.

4.4 – CONCRETE

4" WALLS

STEP 1: Take the square footage of all wall area and subtract the square footage of all window and door openings.

STEP 2: Multiply by 0.333ft (the width of the cavity) to get the cubic feet of concrete required.

STEP 3: Divide by 27cf to determine the total number of yards of concrete required (or divide by 35.32 to determine meters of concrete required).

Example: 1845sf of wall area minus 322sf of window and door area equals 1523sf of net wall area. 1523sf times 0.333ft equals 507cf divided by 27cf per yard equals 18.8 yards of concrete required. Or divide 507cf by 35.32 for meters required. In this case, 14.4 meters.

6.25" WALLS

STEP 1: Take the square footage of all wall area and subtract the square footage of all window and door openings.

STEP 2: Multiply by 0.521ft (the width of the cavity) to get the cubic feet of concrete required.

STEP 3: Divide by 27cf to determine the yards of concrete required (or divide by 35.32 to determine meters required).

Example: 1845sf of wall area minus 322sf of window and door are equals 1523sf of net wall area. 1523sf times 0.521ft equals 793cf divided by 27cf per yard equals 29.4 yards of concrete. Or divide 793cf by 35.32 for meters required. In this case, 22.5.

8" WALLS

STEP 1: Take the square footage of all wall area and subtract the square footage of all window and door openings.

STEP 2: Multiply by 0.667ft (the width of the cavity) to get the cubic feet of concrete required.

STEP 3: Divide by 27 to determine the yards of concrete required (or by 35.32 to determine meters required).

Example: 1845sf of wall area minus 322sf of window and door area equals 1523sf of net wall area. 1523sf times 0.667ft equals 1016cf divided by 27cf per yard equals 37.6 yards of concrete. Or divide 1016cf by 35.32 for meters required. In this case, 28.8.

10" WALLS

STEP 1: Take the square footage of all wall area and subtract the square footage of all window and door openings.

STEP 2: Multiply by 0.833ft (the width of the cavity) to get the cubic feet of concrete required.

STEP 3: Divide by 27cf to determine the total number of yards of concrete required (or by 35.32 to determine meters of concrete required).

Example: 1845sf of wall area minus 322sf of window and door area equals 1523sf of net wall area. 1523sf times 0.833ft equals 1269cf divided by 27cf per yard equals 47.0 yards of concrete required. Or divide 1269cf by 35.32 for meters required. In this case, 35.9 meters.

12" WALLS

STEP 1: Take the square footage of all wall area and subtract the square footage of all window and door openings.

STEP 2: Multiply by 1ft (the width of the cavity) to get the cubic feet of concrete required.

STEP 3: Divide by 27cf to determine the total number of yards of concrete required (or by 35.32 to determine meters of concrete required).

Example: 1845sf of wall area minus 322sf of window and door area equals 1523sf of net wall area. 1523sf times 1ft equals 1523cf divided by 27cf per yard equals 56.4 yards of concrete required. Or divide 1523cf by 35.32 for meters required. In this case, 43.1 meters.

ADD EXTRA CONCRETE FOR BRICK LEDGES

Multiply linear feet of Brick Ledge by 0.007 cubic yards or 0.005 meters to determine the additional yards or meters of concrete needed.

Example: 200lf of Brick Ledge would require 1.4 extra yards of concrete (200 linear feet x 0.007 = 1.4 yards).

ADD EXTRA CONCRETE FOR TAPER TOPS

Multiply linear feet of Taper Top by 0.003 cubic yards or cubic meters 0.002 to determine the additional yards or meter of concrete needed.

Example: 200lf of Taper Top forms would require an additional 0.6 yards of extra concrete (200lf x 0.003 = 0.6 yards).

ADD EXTRA CONCRETE FOR DOUBLE TAPER TOPS

Multiply linear feet of Double Taper Tops by 0.006 cubic yards or cubic meters 0.005 to determine the additional yards or meter of concrete needed.

Example: 200lf of Taper Top forms would require an additional 1.2 yards of extra concrete (200lf x 0.006 = 1.2 yards).

ALTERNATE METHOD FOR CALCULATING CONCRETE

An alternate method to calculate concrete is to use the chart below. Simply multiply the total number of forms by the appropriate multiplier to determine the cubic yards or cubic meters of concrete required.

Form Size	Cubic Yards per Form Unit	Cubic Meters per Form Unit
4″	0.066	0.050
6.25″	0.103	0.079
8″	0.132	0.100
10″	0.165	0.126
12″	0.198	0.151

4.5 – REBAR

Rebar estimating varies from wall to wall depending on factors such as height, vertical loading, horizontal loading, backfill heights, etc.

NOTE: Each Brick Ledge will require six stirrups to tie the horizontal rebar in the corbel to the horizontal rebar in the interior of the form.

4.6 – WATERPROOFING

Multiply linear footage of walls by the height of backfill. When calculating backfill height, make sure to add enough height to allow the waterproofing materials to extend over the edge of the footing.

Divide this number by the square footage per roll of membrane material to determine the total number of rolls required.

If using a rigid waterproofing board, do not include a footing overlap in you calculations.

4.7 – PARGING

Parging typically covers from the top of the waterproofing membrane to a height 2" above the bottom edge of the siding.

Multiply the linear footage of wall by height of parging to determine total square footage of parging required.

Divide this number by the square footage per bag of parging material to determine the total number of bags required.

4.8 – COURSE HEIGHT TABLE

This table shows wall heights that are readily achieved using Standard LOGIX forms used in combination with 4" (102mm) Height Adjusters and/or 8" (203mm) Half Height forms.

Number of Courses	Height of Wall	Add One Height Adj.	Add One Half-hieght	Add One Height Adj. & One Half-height
1	1' - 4" (406mm)	1' - 8" (508mm)	2' - 0" (610mm)	2' - 4" (711mm)
2	2' - 8" (813mm)	3' - 0" (914mm)	3' - 4" (1016mm)	3' - 8" (1118mm)
3	4' - 0" (1219mm)	4' - 4" (1321mm)	4' - 8" (1422mm)	5' - 0" (1524mm)
4	5' - 4" (1626mm)	5' - 8" (1727mm)	6' - 0" (1829mm)	6' - 4" (1930mm)
5	6' - 8" (2032mm)	7' - 0" (2134mm)	7' - 4" (2235mm)	7' - 8" (2337mm)
6	8' - 0" (2438mm)	8' - 4" (2540mm)	8' - 8" (2642mm)	9' - 0" (2743mm)
7	9' - 4" (2845mm)	9' - 8" (2946mm)	10' - 0" (3048mm)	10' - 4" (3150mm)
8	10' - 8" (3251mm)	11' - 0" (3353mm)	11' - 4" (3454mm)	11' - 8" (3556mm)
9	12' - 0" (3658mm)	12' - 4" (3759mm)	12' - 8" (3861mm)	13' - 0" (3962mm)
10	13' - 4" (4064mm)	13' - 8" (4166mm)	14' - 0" (4267mm)	14' - 4" (4369mm)
11	14' - 8" (4470mm)	15' - 0" (4572mm)	15' - 4" (4674mm)	15' - 8" (4775mm)
12	16' - 0" (4877mm)	16' - 4" (4978mm)	16' - 8" (5080mm)	17' - 0" (5182mm)
13	17' - 4" (5283mm)	17' - 8" (5385mm)	18' - 0" (5486mm)	18' - 4" (5588mm)
14	18' - 8" (5690mm)	19' - 0" (5791mm)	19' - 4" (5893mm)	19' - 8" (5994mm)
15	20' - 0" (6096mm)	20' - 4" (6198mm)	20' - 8" (6299mm)	21' - 0" (6401mm)
16	21' - 4" (6502mm)	21' - 8" (6604mm)	22' - 0" (6706mm)	22' - 4" (6807mm)
17	22' - 8" (6909mm)	23' - 0" (7010mm)	23' - 4" (7112mm)	23' - 8" (7214mm)
18	24' - 0" (7315mm)	24' - 4" (7417mm)	24' - 8" (7518mm)	25' - 0" (7620mm)
19	25' - 4" (7722mm)	25' - 8" (7823mm)	26' - 0" (7925mm)	26' - 4" (8026mm)
20	26' - 8" (8128mm)	27' - 0" (8230mm)	27' - 4" (8331mm)	27' - 8" (8433mm)
21	28' - 0" (8534mm)	28' - 4" (8636mm)	28' - 8" (8738mm)	29' - 0" (8839mm)
22	29' - 4" (8941mm)	29' - 8" (9042mm)	30' - 0" (9144mm)	30' - 4" (9246mm)
23	30' - 8" (9347mm)	31' - 0" (9449mm)	31' - 4" (9550mm)	31' - 8" (9652mm)
24	32' - 0" (9754mm)	32' - 4" (9855mm)	32' - 8" (9957mm)	33' - 0" (10058mm)
25	33' - 4" (10160mm)	33' - 8" (10262mm)	34' - 0" (10363mm)	34' - 4" (10465mm)

4.9 – ESTIMATING FORM

Customer Name:_____ Date:_____

Project Name:_____

Wall Type (Circle): Frost Wall Basement Main Floor Second Floor Other

Form Size (Circle): 4” 6.25” 8” 10” 12”

Estimating Data

	Lineal Feet (LF) of Wall		LF Height Adjusters
	Wall Height		LF Extended Brick Ledge
	Number of 90° Turns		LF Taper Top Form
	Number of 45° Turns		Height of Backfill
	Number of Logix Courses		Square Footage (SF) of Openings
	Number of Courses of Standards		Gross SF of Wall (GSF)
	LF Form Lock		Net SF of Wall (NSF)

Quantity	Description	Notes
	Total Number of Forms	
	Standard Forms	
	½ Height Standards	
	90° Corner Forms	
	½ Height 90° Corner Forms	
	Brick Ledge	
	Taper Top Forms	
	Double Taper Top Forms	
	Number of Height Adjusters (2’ each)	
	Number of Form Lock (12.5’ each)	
	Filament Tape (1 roll/50 blocks)	
	Zip Ties (1 bag/200 blocks)	
	Waterproofing Membrane (200sf/roll)	
	Rolls of Fiber Mesh (475sf/roll)	
	Bags of Prepcoat (85sf/bag)	
	LF/Type Rebar	
	Cubic Yards of Concrete	
	LF Window/Door Buck	
	Number of Alignment System Sets	
	Man Hours/sf	

TABLE OF CONTENTS

5.1 - LOGIX ICF FORMS

5.1.1 - STANDARD FORM ..... P. 5-12
5.1.2 - BRICK LEDGE FORM ..... P. 5-13
5.1.4 - TAPER TOP FORM ..... P. 5-14
5.1.5 - DOUBLE TAPER TOP FORM ..... P. 5-15
5.1.6 - LEFT HAND CORNER FORM ..... P. 5-16
5.1.7 - RIGHT HAND CORNER FORM ..... P. 5-17
5.1.8 - LEFT HAND 45° FORM ..... P. 5-18
5.1.9 - RIGHT HAND 45° FORM ..... P. 5-19
5.1.10 - PILASTER FORM ..... P. 5-20
5.1.11 - HALF HEIGHT STANDARD FORM ..... P. 5-21
5.1.12 - HALF HEIGHT LEFT HAND CORNER FORM ..... P. 5-22
5.1.13 - HALF HEIGHT RIGHT HAND CORNER FORM ..... P. 5-23
5.1.14 - HALF HEIGHT LEFT HAND 45° FORM ..... P. 5-24
5.1.15 - HALF HEIGHT RIGHT HAND 45° FORM ..... P. 5-25
5.1.16 - END CAP & 4" HEIGHT ADJUSTER ..... P. 5-26
5.1.17 - REBAR SLOT LOCATIONS - LOGIX PRO FORMS (1 of 4) ..... P. 5-27

5.1.18 - LOGIX KD FORMS

5.1.18.1 - LOGIX KD RIGHT-HAND CORNER FORMS ..... P. 5-31
5.1.18.2 - LOGIX KD LEFT HAND CORNER FORMS ..... P. 5-33
5.1.18.3 - LOGIX KD FORMS ..... P. 5-35
5.1.18.4 - LOGIX KD STANDARD FORM ..... P. 5-36

5.1.20 - LOGIX HORIZONTAL & VERTICAL STEEL HOOKS ..... P. 5-37
5.1.22 - LOGIX XTENDER ..... P. 5-39
5.1.23 - LOGIX T-WALL ..... P. 5-40
5.1.24 - LOGIX D-Rv ..... P. 5-42
5.1.24.1 - LOGIX D-Rv WITH 6.25" LOGIX 90° CORNER FORMS ..... P. 5-43
5.1.24.2 - LOGIX D-Rv WITH 8" LOGIX 90° CORNER FORMS ..... P. 5-44
5.1.24.3 - LOGIX D-Rv WITH 10" LOGIX 90° CORNER FORMS ..... P. 5-45
5.1.24.4 - LOGIX D-Rv WITH 12" LOGIX 90° CORNER FORMS ..... P. 5-46
5.1.24.5 - LOGIX D-Rv WITH 6.25" LOGIX 45° CORNER FORMS ..... P. 5-47

5.1.24.6 - LOGIX D-Rv WITH 8" LOGIX 45° CORNER FORMS ..... P. 5-48
5.1.26 - LOGIX PRO BUCK ..... P. 5-49
5.1.27 - HEAT-SHEET RADIANT FLOOR INSULATION ..... P. 5-50
5.1.28 - HEAT-SHEET HEAVY RADIANT FLOOR INSULATION ..... P. 5-51
5.1.29 - HEAT-SHEET UNDER SLAB APPLICATION ..... P. 5-52

5.2 - GENERAL DETAILS

5.2.1 - REINFORCING ..... P. 5-54
5.2.1.1 - CORNER WALL REINFORCING ..... P. 5-54
5.2.1.2 - CORNER REINFORCING WITH BRICK LEDGE FORMS ..... P. 5-55
5.2.1.4 - T-WALL REINFORCING ..... P. 5-56
5.2.1.5 - TYPICAL REINFORCEMENT AROUND OPENINGS ..... P. 5-57
5.2.1.6 / 5.2.1.7 - BRICK LEDGE STANDARD REINFORCEMENT / BRICK LEDGE HEAVY REINFORCEMENT ..... P. 5-58
5.2.1.8 - BRICK LEDGE STIRRUP DETAIL ..... P. 5-59
5.2.2 - WALL CONNECTIONS ..... P. 5-62
5.2.2.1 - ATTACHING TO STUD FRAMED WALLS ..... P. 5-62
5.2.2.2 - STUD WALL CLOSURE ATTACHMENT ..... P. 5-63
5.2.2.3 - 1 HR FIRE RATED WALL DETAIL AT PARTITION/ICF WALL JOINT ..... P. 5-64
5.2.2.4 - ANGLED STUD FRAMED WALL ATTACHMENT ..... P. 5-65
5.2.2.5 / 5.2.2.6 - ATTACHING TO EXISTING CONCRETE WALL/CONCRETE MASONRY WALL ..... P. 5-66
5.2.2.7 - 12" WALL JOGS ..... P. 5-67
5.2.2.8 - 18" JOGS WITH LEFT & RIGHT HAND 10" LOGIX PRO CORNER FORMS ..... P. 5-68
5.2.2.9 - HORIZONTAL TRANSITION - 6.25" TO 8" CORNER WALL ..... P. 5-69
5.2.2.10 - HORIZONTAL TRANSITION - 6.25" TO 8" TEE WALL WITH END CAP ..... P. 5-71
5.2.2.11 - PRECAST PANEL WALL ..... P. 5-73
5.2.2.12 - CANOPY FRAMING ..... P. 5-74
5.2.2.13 - DOUBLE FRAMED WALL ON LOGIX ICF WITH BRICK LEDGE ..... P. 5-75
5.2.3 - EXTERIOR FINISHES ..... P. 5-78
5.2.3.1 - EXTERIOR FINISHES ..... P. 5-78
5.2.3.2 - LOGIX ICF WITH STONE VENEER ..... P. 5-79

Reprinted 2017

5.2.3.3 - WALL BASE WEEP SCREED ..... P. 5-80
5.2.3.4 - WEEP SCREED & FLASHING AT CONCRETE DECK ..... P. 5-81
5.2.3.5 - ZERO LOT LINE CONSTRUCTION DETAIL ..... P. 5-82
5.2.3.6 - TERMITE STRIP ..... P. 5-83
5.2.3.7 - EXTERIOR CLADDING PANELS ..... P. 5-84
5.2.3.8 - STONE VENEER APPLICATION WITH DRAINAGE PLANE ..... P. 5-86
5.2.4 - ATTACHMENTS ..... P. 5-88
5.2.4.1 - METAL HANDRAIL ..... P. 5-88
5.2.4.2 - HAND RAIL ..... P. 5-89
5.2.4.3 - GRAB BAR SUPPORT ..... P. 5-90
5.2.4.4 - EMBEDDED VERTICAL PIPE ..... P. 5-91
5.2.4.5 - LOGIX WITH PANELBOARD (1 of 2) ..... P. 5-92
5.2.4.6 - SIMPSON STRONG TIE WITH CABINETS ..... P. 5-94
5.2.4.7 - DECK ATTACHMENT ..... P. 5-95
5.2.5 - LEDGE & CORBEL DETAILS ..... P. 5-98
5.2.5.1 - LOGIX 6.25" ON 8" BRICK LEDGE ..... P. 5-98
5.2.5.2 - TRANSITION FROM TAPER TOP TO BRICK LEDGE ..... P. 5-99
5.2.5.3 - BRICKLEDGE FORMED WITH 12" KD FORMS ..... P. 5-100
5.2.5.4 - ANGLE SEAT DETAILS ..... P. 5-101
5.2.5.5 - ANGLE IRON SUPPORTING BRICK VENEER ..... P. 5-102
5.2.5.6 - STEEL ANGLE SUPPORTING BRICK VENEER ..... P. 5-103
5.2.5.7 - BRICK LEDGE SHELF ANGLE ..... P. 5-104
5.2.5.8 - CORBEL REINFORCING DETIALS ..... P. 5-105
5.2.5.9 - CORBEL SUPPORTING TIMBER POST ..... P. 5-106
5.2.5.10 - CORBEL SUPPORTING DECK AND STONE VENEER ..... P. 5-107
5.2.5.11 - BRICK LEDGE WITH TIMBER POST ..... P. 5-108
5.2.5.12 - BRICK LEDGE FLASHING DETAILS ..... P. 5-109
5.2.5.13 - CMU BRICK LEDGE ..... P. 5-110
5.2.5.14 - LOGIX BRICK LEDGE ON FOOTING ..... P. 5-111
5.2.6 - WINDOW & DOOR DETAILS ..... P. 5-114
5.2.6.1 - THERMAL BREAK AT THRESHOLD ..... P. 5-114
5.2.6.2 - SLOPED CONCRETE SILL ..... P. 5-115
5.2.6.3 - WINDOW HEAD / SILL DETAIL ..... P. 5-116

5.2.6.5 - WINDOW HEAD / SILL STEEL FRAME ..... P. 5-117
5.2.6.6 - ALUMINUM WINDOW HEAD / SILL ..... P. 5-118
5.2.6.7 - WINDOW SCREEN ..... P. 5-119
5.2.6.8 – EXTERIOR WINDOW SCREEN ..... P. 5-120
5.2.6.9 - ALUMINUM WINDOW FRAME ..... P. 5-121
5.2.6.10- ALUMINUM WINDOW HEAD/SILL W/ TIMBERSTRAND LSL ..... P. 5-122
5.2.6.11 - WELDED PRESS STEEL DOOR FRAME - CENTER MOUNTED ..... P. 5-123
5.2.6.12 - WINDOW & DOOR DETAILS ..... P. 5-124
5.2.6.13 - WINDOW BUCK DETAILS ..... P. 5-125
5.2.6.14 – WINDOW OPENING - TEMPORARY
FORM SUPPORT FOR EXPOSED CONCRETE W/ 4" TRIM ..... P. 5-127
5.2.6.15 - STEEL LINTEL WITH BRICK VENEER ..... P. 5-129
5.2.6.16 – CANOPY & ROLL-UP DOOR ..... P. 5-130
5.2.6.17 - OVERHEAD GARAGE DOOR ..... P. 5-131
5.2.6.18 – WELDED PRESSED STEEL DOOR FRAME - FLUSH MOUNTED ..... P. 5-132
5.2.6.19 – BRICK VENEER OVER DOOR OPENING ..... P. 5-133
5.2.6.20 – D-Rv WITH WICK DRAIN ..... P. 5-134
5.2.6.21 – LOGIX PRO BUCK INSET WINDOW FLASHING ..... P. 5-135
5.2.6.22 – LOGIX PRO BUCK FLANGED WINDOW FLASHING ..... P. 5-136
5.2.7 - POOL APPLICATION ..... P. 5-138
5.2.7.1 - POOL FINISH ..... P. 5-138
5.2.7.2 - FLEXCRETE POOL APPLICATION ..... P. 5-139
5.2.7.3 - POOL DETAIL FORMING FOR COPING OPTION 1 (1 OF 5) ..... P. 5-140
5.2.7.4 - POOL DETAIL FORMING FOR COPING OPTION 2 (2 OF 5) ..... P. 5-141
5.2.7.5 - POOL DETAIL OF INLET / OUTLET FIXTURE (3 OF 5) ..... P. 5-142
5.2.7.6 - POOL DETAIL AT FOOTING (4 OF 5) ..... P. 5-143
5.2.7.7 - DETAIL OF POOL SKIMMER (5 OF 5) ..... P. 5-144

5.3 - FROST WALLS

5.3.1 - 4' FROST WALL (CRAWL SPACE) ..... P. 5-146
5.3.2 - 4'-8" FROST WALL (CRAWL SPACE) ..... P. 5-147
5.3.3 - 6' FROST WALL (CRAWL SPACE) ..... P. 5-148
5.3.4 - 4' FROST WALL (INTEGRAL SLAB) ..... P. 5-149

5.3.5 - 4′ FROST WALL WITH DOUBLE TAPER TOP SUPPORTING WOOD FRAME AND BALANCED BACKFILL ..... P. 5-150
5.3.6 - 4′ FROST WALL ICF ABOVE-GRADE ..... P. 5-151
5.3.7 - 3 FT STEM WALL WITH HEAT-SHEET RADIAN FLOOR INSULATION ..... P. 5-152

5.4 - FOUNDATION WALLS

5.4.1 - 8′ FOUNDATION ..... P. 5-154
5.4.2 - 8′-4″ FOUNDATION ..... P. 5-155
5.4.3 - 8′-8″ FOUNDATION ..... P. 5-156
5.4.4 - 9′-4″ FOUNDATION ..... P. 5-157
5.4.5 - 10′-4″ FOUNDATION ..... P. 5-158
5.4.6 - LOGIX 6.25″ BRICK LEDGE SUPPORTING WOOD FRAME ABOVE GRADE ..... P. 5-159
5.4.7 - 4′ KNEE WALL WITH 6.25″ LOGIX FORMS ..... P. 5-160
5.4.8 - WATERPROOF DETAIL AROUND BRICK LEDGE (optional) ..... P. 5-161
5.4.9 - BELOW GRADE BRICK VENEER ..... P. 5-162
5.4.10 - ALASKAN SLAB WITH LOGIX XTENDER ..... P. 5-163
5.4.11 - LOGIX FOOTING WITH XTENDER ..... P. 5-164
5.4.12 - 8″ TO 4″ TRANSITION ..... P. 5-165
5.4.13 - 8″ TO 8″ TRANSITION ..... P. 5-166
5.4.14 - 8″ TO 6.25″ TRANSITION ..... P. 5-167
5.4.15 - 8′ FOUNDATION WALL WITH BRICK LEDGE ..... P. 5-168
5.4.16 - BRICK LEDGE FLASHING DETAILS ..... P. 5-169
5.4.17 - WATERPROOF MEMBRANE PROTECTION ..... P. 5-170
5.4.18- LOGIX ICF WITH BILCO SIZE "C" STANDARD CLASSIC SERIES DOORS ..... P. 5-171
5.4.19 - RADON BARRIER UNDER SLAB ..... P. 5-172
5.4.20 - LOGIX KD FOOTING ..... P. 5-173
5.4.21 - TRENCHED STEM WALL ..... P. 5-174
5.4.22 - LOGIX 8″ BRICK LEDGE SUPPORTING WOOD FRAME ABOVE GRADE ..... P. 5-175

5.5 - SLAB CONSTRUCTION

5.5.1 - 8′ SLAB ON GRADE ..... P. 5-178
5.5.2 - 9′-4″ SLAB ON GRADE ..... P. 5-179
5.5.3 - 8′ SHALLOW FROST WALL ..... P. 5-180
5.5.4 - 9′ SHALLOW FROST WALL ..... P. 5-181

5.5.5 - 8′ WALL SLAB ON GRADE WITH DOUBLE TAPER TOP ..... P. 5-182
5.5.6 - SLAB ON GRADE WITH RADIANT HEATING ..... P. 5-183
5.5.7 - SLAB ON GRADE WITH BRICK LEDGE & MODIFIED TAPER TOP ..... P. 5-184

5.6 - ONE STOREY CONSTRUCTION

5.6.1 - 8′ FOUNDATION WALL/8′ MAIN FLOOR ..... P. 5-186
5.6.2 - 8′ FOUNDATION WALL/9′ MAIN FLOOR ..... P. 5-187
5.6.3 - 8′-8″ FOUNDATION WALL/10′ MAIN FLOOR ..... P. 5-188
5.6.4 - 8″ TO 4″ TRANSITION WALL SECTION ..... P. 5-189
5.6.6 - LOGIX 6.25″ BELOW- & ABOVE-GRADE WALL WITH BRICKLEDGE ..... P. 5-190
5.6.7 - 9FT PRECUT STUD WALL W/ HEIGHT/FOOTING OPTIONS ..... P. 5-191

5.7 - TWO STOREY CONSTRUCTION

5.7.1 - 8′ FOUNDATION WALL/8′ MAIN FLOOR/8′ SECOND LEVEL ..... P. 5-194
5.7.2 - 8′ FOUNDATION WALL/9′ MAIN FLOOR/8′ SECOND LEVEL ..... P. 5-195

5.8 - FLOOR CONNECTIONS

5.8.1 - 2x6 TOP PLATE RECESSED WITH DOUBLE TAPER TOP ..... P. 5-198
5.8.2 - 2x8 TOP PLATE OVERHUNG WITH DOUBLE TAPER TOP ..... P. 5-198
5.8.3 - 2x8 TOP PLATE OVERHUNG WITH TAPER TOP ..... P. 5-199
5.8.4 - MASONRY VENEER WITH TAPER TOP ..... P. 5-199
5.8.5 - TAPER TOP WITH LOG HOME ..... P. 5-200
5.8.6 - TAPER TOP WITH LOG HOME 2x12 SILL PLATE ..... P. 5-201
5.8.7 - TRANSITION - 8″ TAPER TOP TO 4″ STANDARD ..... P. 5-202
5.8.8 - SIMPSON ICF HANGER ..... P. 5-203
5.8.9 - SIMPSON STRONG TIE - ICF LEDGER CONNECTION SYSTEM ..... P. 5-204
5.8.10 - 8″ TO 6″ TRANSITION WITH SIMPSON ICF HANGERS ..... P. 5-205
5.8.11 - ANCHOR TUNNEL - FLOOR LEDGER CONNECTION ..... P. 5-206
5.8.12 - SIMPSON STRONG TIE- STUD FRAME CONNECTIONS ..... P. 5-207
5.8.13 - FRAME STRAP ALTERNATIVE ..... P. 5-208
5.8.15 - WOOD FLOOR JOIST PARALLEL TO WALL (1 OF 2) ..... P. 5-209
5.8.16 - BELOW GRADE BRICK VENEER (1 OF 4) ..... P. 5-211
5.8.17 - PARTY WALL WITH FIRE STOP ..... P. 5-215
5.8.18 - FORTRUSS FLOOR & ROOF SYSTEM ..... P. 5-216

5.8.19 - AMDECK FLOOR & ROOF SYSTEM ..... P. 5-217
5.8.20 - 10" TO 6.25" WALL TRANSITION..... P. 5-218

5.9 - ROOF CONNECTIONS

5.9.1 - ROOF - 2x6 RECESSED TOP PLATE..... P. 5-220
5.9.2 - ROOF - 2x8 OVERHUNG TOP PLATE ..... P. 5-220
5.9.3 - ROOF - 2x6 WITH TAPER TOP FORM ..... P. 5-221
5.9.4 - ROOF - HURRICANE TIE DOWN STRAP..... P. 5-222
5.9.5 - VAULTED CEILINGS - 1 of 2 ..... P. 5-223
5.9.6 - LOGIX WALL WITH SIP ROOF..... P. 5-225
5.9.7 - ROOF DETAIL WITH SIMPSON STRONG-TIE H1/H2.5 STRAP..... P. 5-226
5.9.8 - GABLE WALL END WOOD FRAMED CONNECTION ..... P. 5-227
5.9.9 - SLOPED ROOF/WALL INTERSECTION ..... P. 5-228
5.9.10 - FIRE WALL ABOVE ROOF LINE..... P. 5-229
5.9.11 - SIMPSON STRONGTIE ROOF TRUSS BEAM SEAT ..... P. 5-230
5.9.12 - LATERAL TRUSS ANCHOR..... P. 5-231

5.1 - LOGIX ICF FORMS

All drawings are downloadable at www.logixicf.com

LOGIX ICFs are available in many variations designed to accommodate all construction type details.

LOGIX carries both assembled form units, known as LOGIX PRO, and unassembled (or knock-down) systems known as LOGIX KD. In addition, LOGIX Xtenders allow LOGIX forms to be used for wider concrete wall thicknesses greater than 12 inches (see Drawing 5.1.22).

For a complete list of LOGIX product lines see Section 8.1.

NOTE: The tables and drawings represented herein are believed to be accurate and conforming to current design and construction practices. However, the tables and drawings should be used as a reference guide only. The user shall check to ensure the drawing meets local building codes, design and construction practices by consulting local building officials and professionals, including any additional requirements. Logix reserves the right to make changes to the tables and drawings without notice and assumes no liability in connection with the use of the tables and drawings including modification, copying or distribution.

CAD DRAWINGS

The tables and drawings represented herein are believed to be accurate and conforming to current design and construction practices. However, the tables and drawings should be used as a reference guide only. The user shall check to ensure the drawing meets local building codes, design and construction practices by consulting local building officials and professionals, including any additional requirements. Logix reserves the right to make changes to the tables and drawings without notice and assumes no liability in connection with the use of the tables and drawings including modification, copying or distribution.

Reprinted 2017

5.1.1 - STANDARD FORM

All drawings are downloadable at www.logixicf.com

CAD DRAWINGS

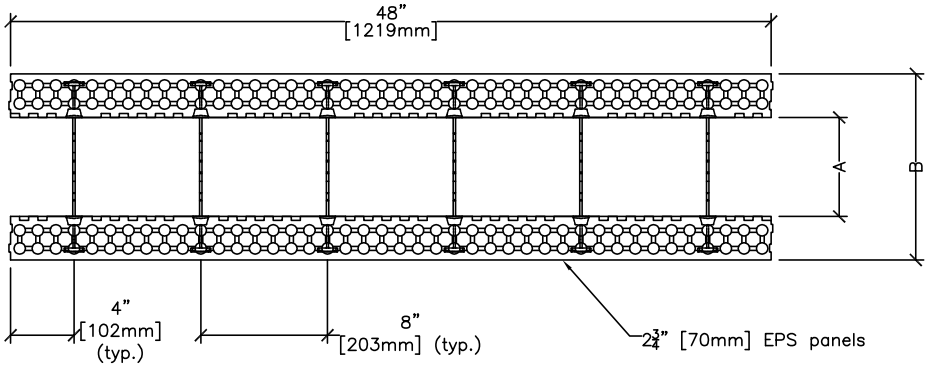

PLAN VIEW

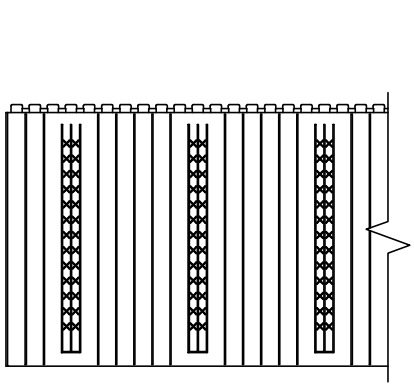

SIDE ELEVATION

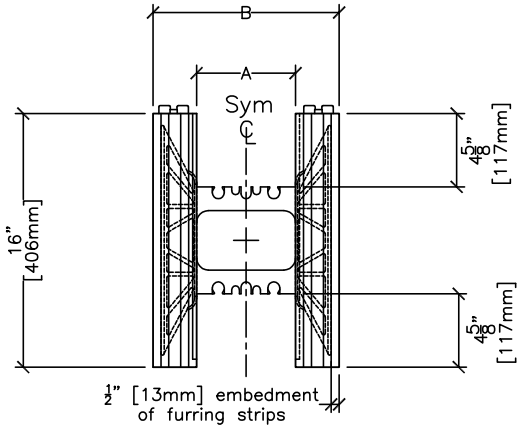

END VIEW

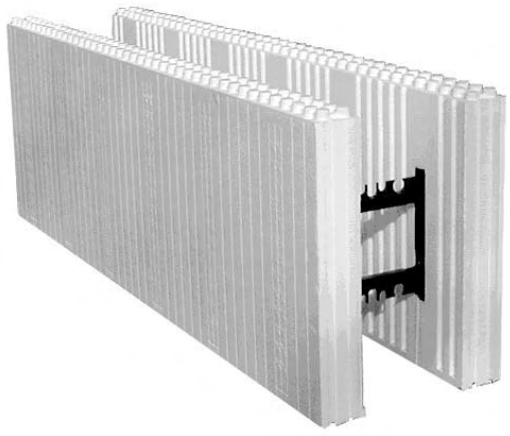

	FORM SIZES, in (mm)				
	4 (102)	6.25 (159)	8 (203)	10 (254)	12 (305)
Dimension A, in (mm)	4 (102)	6.25 (159)	8 (203)	10 (254)	12 (305)
Dimension B, in (mm)	9.5 (241)	11.75 (298)	13.5 (343)	15.5 (394)	17.5 (445)
Conc. Vol. (y^3)	0.066	0.103	0.132	0.165	0.198
Conc. Vol. (ft^3)	1.778	2.778	3.556	4.444	5.333
Conc. Vol. (m^3)	0.050	0.079	0.101	0.126	0.151

NOTES:

1. Wall area per block or panel = 5.333 ft^2
2. Forms are available as assembled (LOGIX PRO) or unassembled (or knock–down) form blocks (LOGIX KD Product drawings).
3. Concrete core thickness wider than 12" (305mm) are available using LOGIX Xtenders (See Logix Xtender Product drawing).
4. 6¼" [159mm] LOGIX Form shown.

The tables and drawings represented herein are believed to be accurate and conforming to current design and construction practices. However, the tables and drawings should be used as a reference guide only. The user shall check to ensure the drawing meets local building codes, design and construction practices by consulting local building officials and professionals, including any additional requirements. Logix reserves the right to make changes to the tables and drawings without notice and assumes no liability in connection with the use of the tables and drawings including modification, copying or distribution.

5.1.2 - BRICK LEDGE FORM

All drawings are downloadable at www.logixicf.com

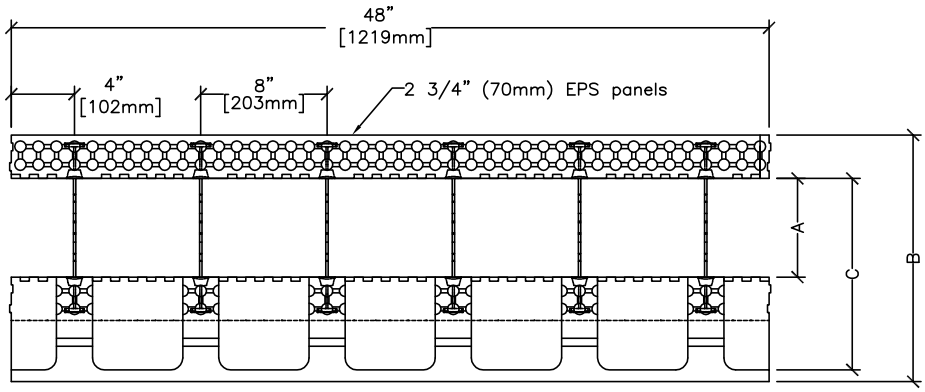

PLAN VIEW

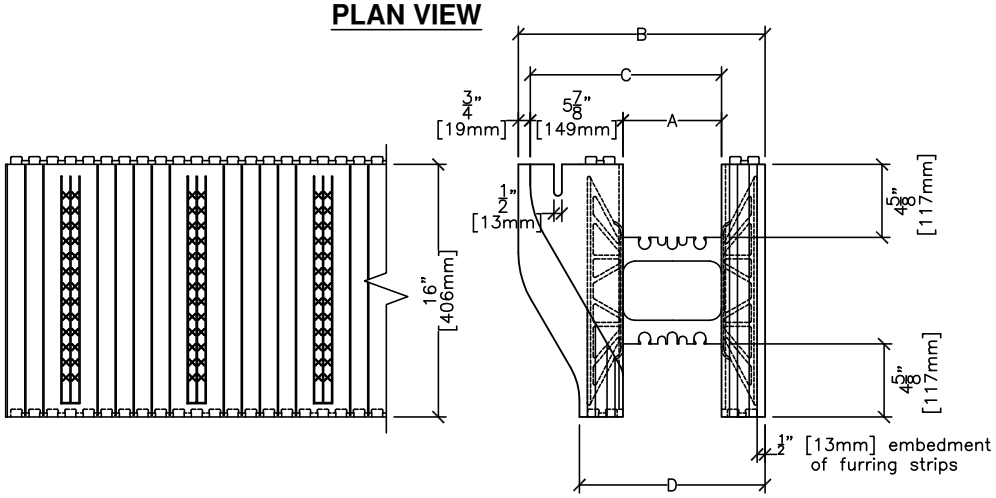

SIDE ELEVATION

END VIEW

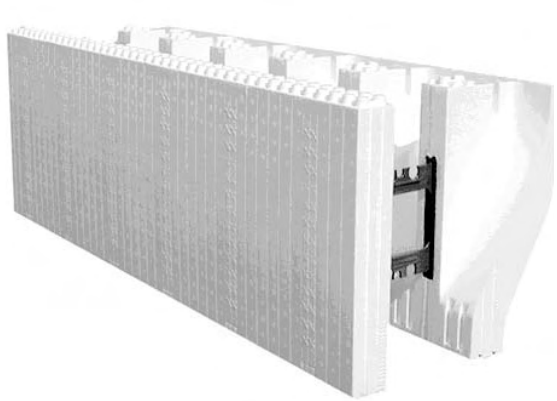

	FORM SIZES, in (mm)				
	4 (102)	6.25 (159)	8 (203)	10 (254)	12 (305)
Dimension A, in (mm)	4 (102)	6.25 (159)	8 (203)	10 (254)	12 (305)
Dimension B, in (mm)	13.325 (338)	15.625 (397)	17.375 (441)	19.375 (492)	21.375 (543)
Dimension C, in (mm)	9.875 (251)	12.125 (308)	13.875 (352)	15.875 (403)	17.875 (454)
Dimension D, in (mm)	9.5 (241)	11.75 (298)	13.5 (343)	15.5 (394)	17.5 (445)
Conc. Vol. (y^3)	0.073	0.110	0.139	0.172	0.205
Conc. Vol. (ft^3)	1.967	2.967	3.745	4.633	5.522
Conc. Vol. (m^3)	0.056	0.084	0.106	0.131	0.156

NOTES:

1. Wall area per block or panel = 5.333 ft^2
2. Forms are available as assembled (LOGIX PRO) or unassembled (or knock–down) form blocks (LOGIX KD Product drawings).
3. Concrete core thickness wider than 12" (305mm) are available using LOGIX Xtenders (See Logix Xtender Product drawing).
4. 6 1/4" [159mm] LOGIX Form shown.

The tables and drawings represented herein are believed to be accurate and conforming to current design and construction practices. However, the tables and drawings should be used as a reference guide only. The user shall check to ensure the drawing meets local building codes, design and construction practices by consulting local building officials and professionals, including any additional requirements. Logix reserves the right to make changes to the tables and drawings without notice and assumes no liability in connection with the use of the tables and drawings including modification, copying or distribution.

CAD DRAWINGS

5.1.4 - TAPER TOP FORM

All drawings are downloadable at www.logixicf.com

CAD DRAWINGS

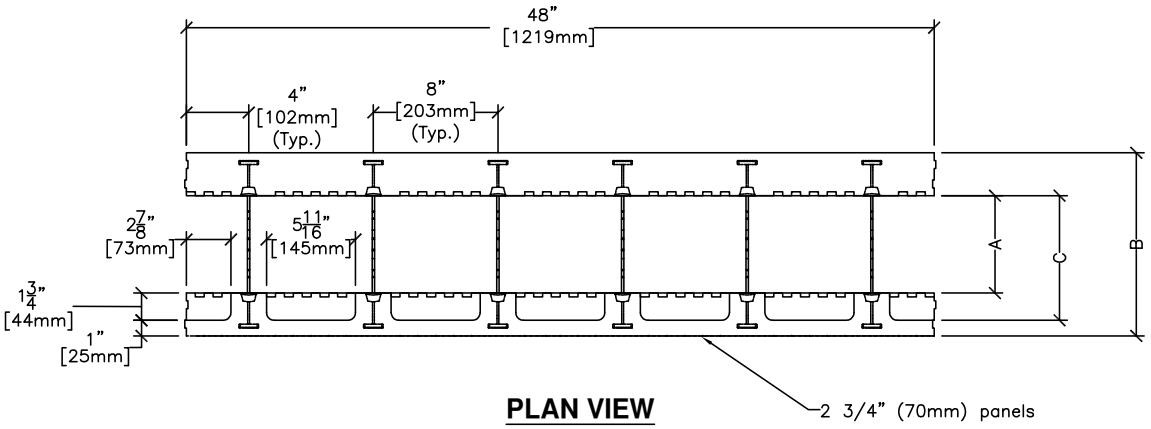

PLAN VIEW

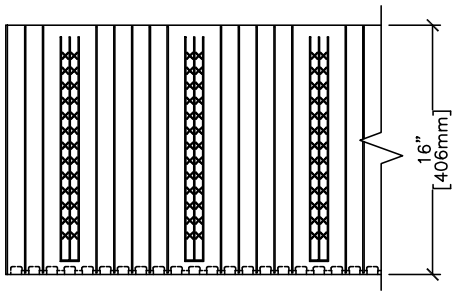

SIDE ELEVATION

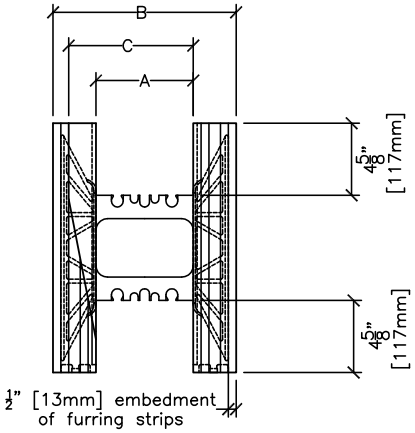

END VIEW

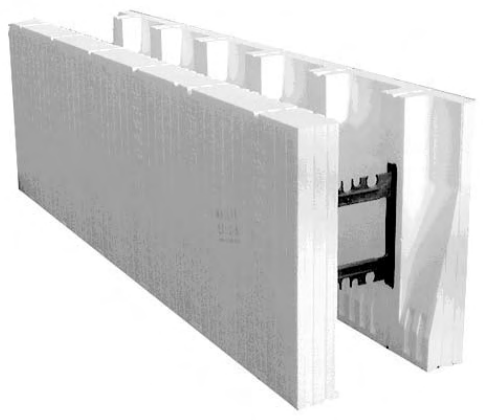

	FORM SIZES, in (mm)				
	4 (102)	6.25 (159)	8 (203)	10 (254)	12 (305)
Dimension A, in (mm)	4 (102)	6.25 (159)	8 (203)	10 (254)	12 (305)
Dimension B, in (mm)	9.5 (241)	11.75 (298)	13.5 (343)	15.5 (394)	17.5 (445)
Dimension C, in (mm)	5.75 (146)	8 (203)	9.75 (248)	11.75 (298)	13.75 (349)
Conc. Vol. (y^3)	0.087	0.124	0.152	0.185	0.218
Conc. Vol. (ft^3)	2.339	3.339	4.116	5.005	5.894
Conc. Vol. (m^3)	0.066	0.095	0.117	0.142	0.167
Wall Area (sf)	5.333	5.333	5.333	5.333	5.333
R-value	21.3	21.5	21.6	21.7	21.8
RSI	3.76	3.78	3.80	3.82	3.84

NOTES:

1. Wall area per block or panel = 5.333 ft^2
2. Forms are available as assembled (LOGIX PRO) or unassembled (or knock–down) form blocks (LOGIX KD Product drawings).
3. Concrete core thickness wider than 12" (305mm) are available using LOGIX Xtenders (See Logix Xtender Product drawing).
4. 6 1/4" [159mm] LOGIX Form shown.

The tables and drawings represented herein are believed to be accurate and conforming to current design and construction practices. However, the tables and drawings should be used as a reference guide only. The user shall check to ensure the drawing meets local building codes, design and construction practices by consulting local building officials and professionals, including any additional requirements. Logix reserves the right to make changes to the tables and drawings without notice and assumes no liability in connection with the use of the tables and drawings including modification, copying or distribution.

5.1.5 - DOUBLE TAPER TOP FORM

All drawings are downloadable at www.logixicf.com

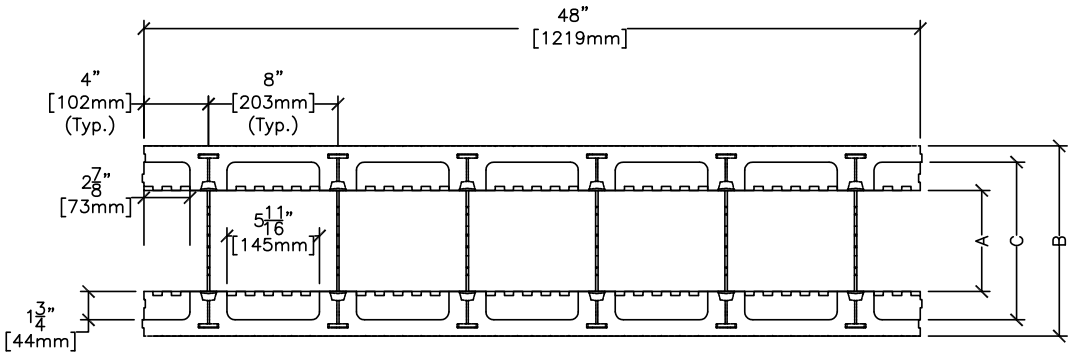

PLAN VIEW

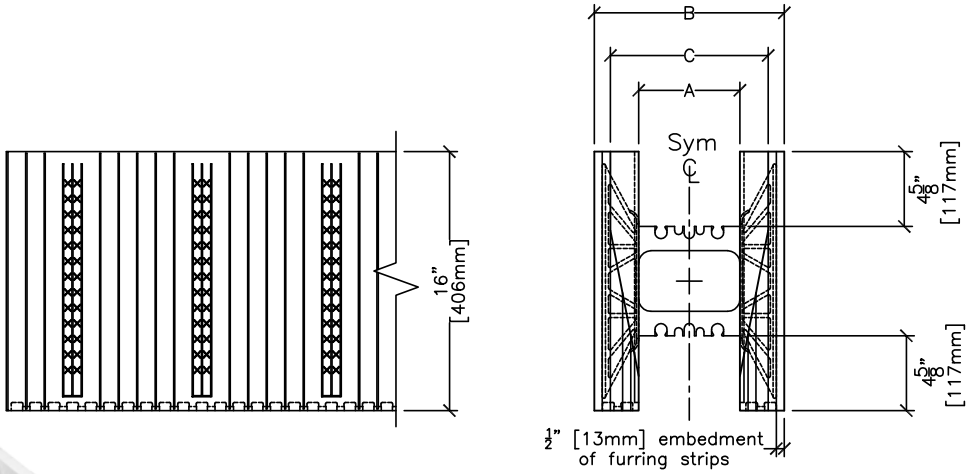

END VIEW

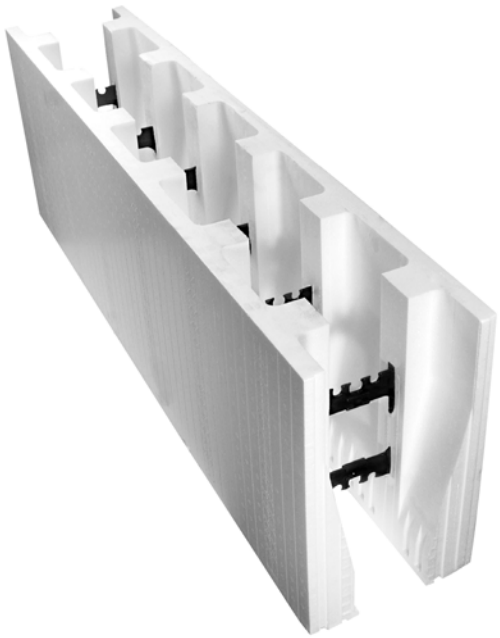

	FORM SIZES, in (mm)				
	4 (102)	6.25 (159)	8 (203)	10 (254)	12 (305)
Dimension A, in (mm)	4 (102)	6.25 (159)	8 (203)	10 (254)	12 (305)
Dimension B, in (mm)	9.5 (241)	11.75 (298)	13.5 (343)	15.5 (394)	17.5 (445)
Dimension C, in (mm)	7.5 (191)	9.75 (248)	11.5 (292)	13.5 (343)	15.5 (394)
Conc. Vol. (y^3)	0.090	0.127	0.155	0.188	0.221
Conc. Vol. (ft^3)	2.420	3.420	4.197	5.086	5.975
Conc. Vol. (m^3)	0.069	0.097	0.119	0.144	0.169

NOTES:

1. Wall area per block or panel = 5.333 ft^2
2. Forms are available as assembled (LOGIX PRO) or unassembled (or knock–down) form blocks (LOGIX KD Product drawings).
3. Concrete core thickness wider than 12" (305mm) are available using LOGIX Xtenders (See Logix Xtender Product drawing).
4. 6 1/4" [159mm] LOGIX Form shown.

The tables and drawings represented herein are believed to be accurate and conforming to current design and construction practices. However, the tables and drawings should be used as a reference guide only. The user shall check to ensure the drawing meets local building codes, design and construction practices by consulting local building officials and professionals, including any additional requirements. Logix reserves the right to make changes to the tables and drawings without notice and assumes no liability in connection with the use of the tables and drawings including modification, copying or distribution.

CAD DRAWINGS

5.1.6 - LEFT HAND CORNER FORM

All drawings are downloadable at www.logixicf.com

CAD DRAWINGS

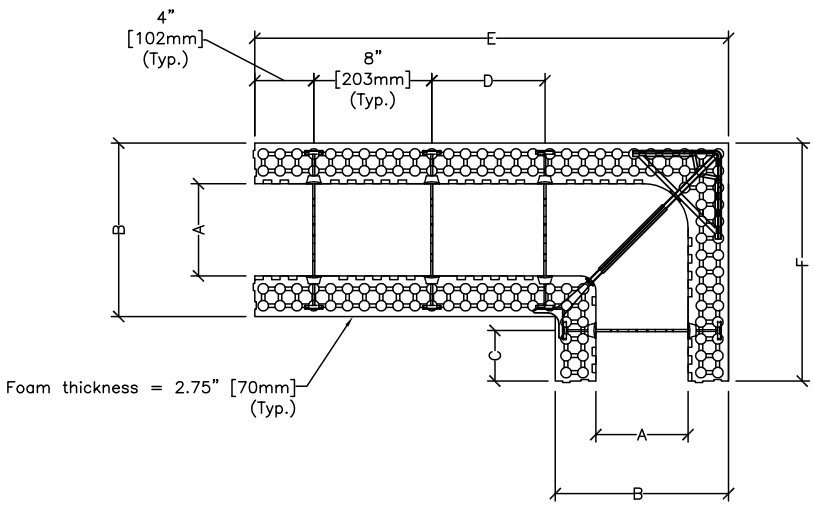

PLAN VIEW

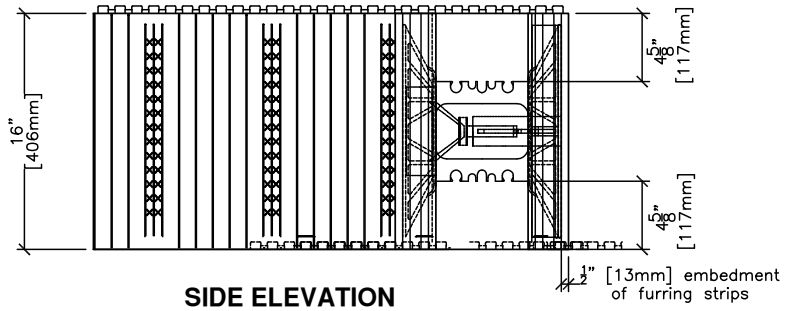

SIDE ELEVATION

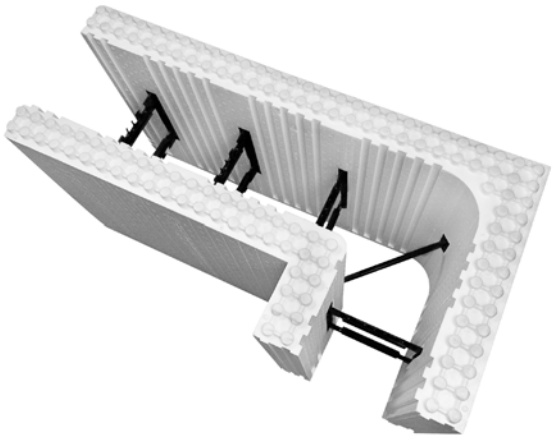

	FORM SIZES, in (mm)			
	4 (102)	6.25 (159)	8 (203)	10 (254)
Dimension A, in (mm)	4 (102)	6.25 (159)	8 (203)	10 (254)
Dimension B, in (mm)	9.5 (241)	11.75 (298)	13.5 (343)	15.5 (394)
Dimension C, in (mm)	3.5 (89)	3.375 (86)	2.25 (57)	2.125 (54)
Dimension D, in (mm)	7.67 (195)	7.67 (195)	6.125 (156)	5.875 (149)
Dimension E, in (mm)	32.125 (816)	32.125 (816)	32.125 (816)	34.5 (876)
Dimension F, in (mm)	16.125 (410)	16.125 (410)	16.125 (410)	18.5 (470)
Conc. Vol. (y^3)	0.053	0.078	0.095	0.128
Conc. Vol. (ft^3)	1.419	2.096	2.558	3.456
Conc. Vol. (m^3)	0.040	0.059	0.072	0.098
Outside Corner Wall Area (ft^2)	5.361	5.361	5.361	5.889
Inside Corner Wall Area (ft^2)	3.250	2.750	2.361	2.444

NOTES:

1. Forms are available as assembled (LOGIX PRO) or unassembled (or knock–down) form blocks (LOGIX KD Product drawings).
2. Concrete core thickness wider than 12" (305mm) are available using LOGIX Xtenders (See Logix Xtender Product drawing).
3. 6¼" [159mm] LOGIX Corner Form shown.

The tables and drawings represented herein are believed to be accurate and conforming to current design and construction practices. However, the tables and drawings should be used as a reference guide only. The user shall check to ensure the drawing meets local building codes, design and construction practices by consulting local building officials and professionals, including any additional requirements. Logix reserves the right to make changes to the tables and drawings without notice and assumes no liability in connection with the use of the tables and drawings including modification, copying or distribution.

5.1.7 - RIGHT HAND CORNER FORM

All drawings are downloadable at www.logixicf.com

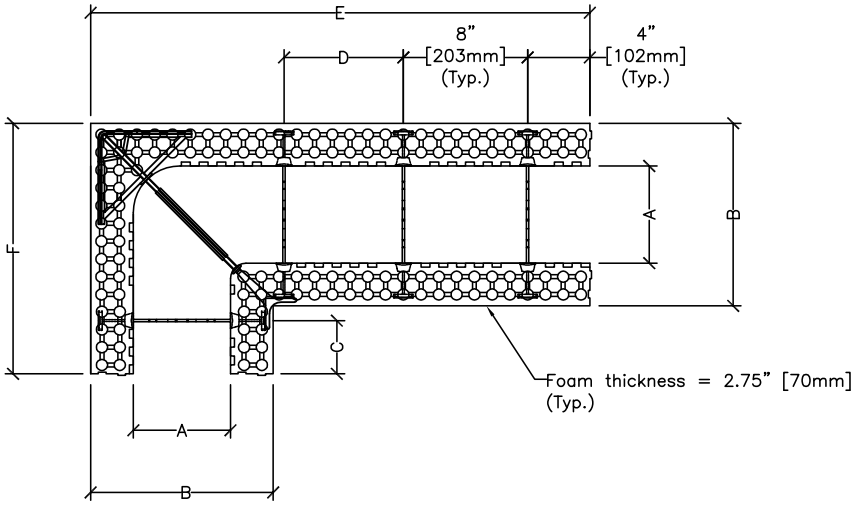

PLAN VIEW

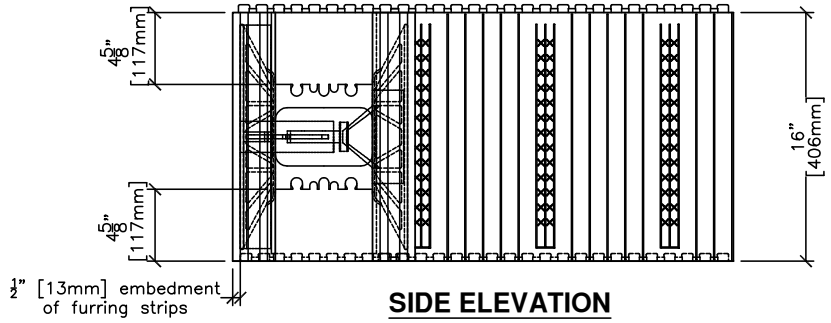

SIDE ELEVATION

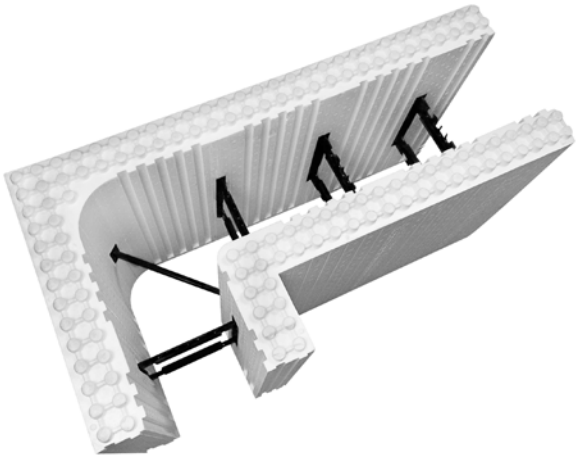

	FORM SIZES, in (mm)			
	4 (102)	6.25 (159)	8 (203)	10 (254)
Dimension A, in (mm)	4 (102)	6.25 (159)	8 (203)	10 (254)
Dimension B, in (mm)	9.5 (241)	11.75 (298)	13.5 (343)	15.5 (394)
Dimension C, in (mm)	3.5 (89)	3.375 (86)	2.25 (57)	2.125 (54)
Dimension D, in (mm)	7.67 (195)	7.67 (195)	6.125 (156)	5.875 (149)
Dimension E, in (mm)	32.125 (816)	32.125 (816)	32.125 (816)	34.5 (876)
Dimension F, in (mm)	16.125 (410)	16.125 (410)	16.125 (410)	18.5 (470)
Conc. Vol. (y^3)	0.053	0.078	0.095	0.128
Conc. Vol. (ft^3)	1.419	2.096	2.558	3.456
Conc. Vol. (m^3)	0.040	0.059	0.072	0.098
Outside Corner Wall Area (ft^2)	5.361	5.361	5.361	5.889
Inside Corner Wall Area (ft^2)	3.250	2.750	2.361	2.444

NOTES:

1. Forms are available as assembled (LOGIX PRO) or unassembled (or knock–down) form blocks (LOGIX KD Product drawings).
2. Concrete core thickness wider than 12" (305mm) are available using LOGIX Xtenders (See Logix Xtender Product drawing).
3. 6¼" [159mm] LOGIX Corner Form shown.

The tables and drawings represented herein are believed to be accurate and conforming to current design and construction practices. However, the tables and drawings should be used as a reference guide only. The user shall check to ensure the drawing meets local building codes, design and construction practices by consulting local building officials and professionals, including any additional requirements. Logix reserves the right to make changes to the tables and drawings without notice and assumes no liability in connection with the use of the tables and drawings including modification, copying or distribution.

CAD DRAWINGS

5.1.8 - LEFT HAND 45° FORM

All drawings are downloadable at www.logixicf.com

CAD DRAWINGS

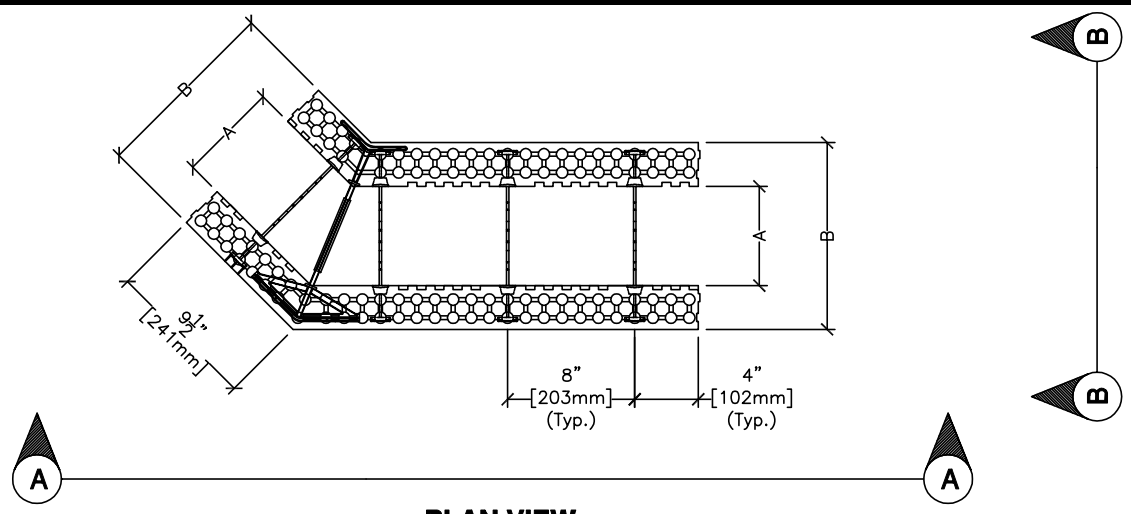

PLAN VIEW

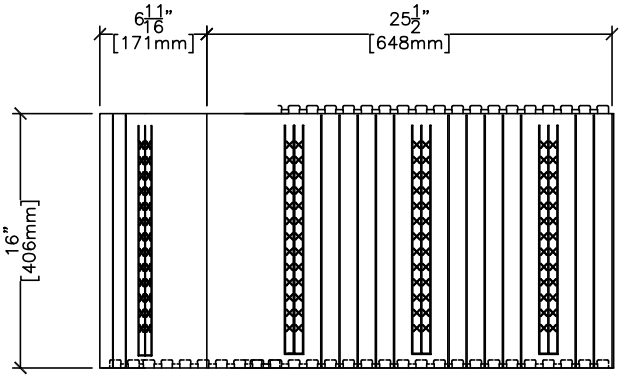

ELEVATION A-A

For clarity knobs partially removed in evelvation views.

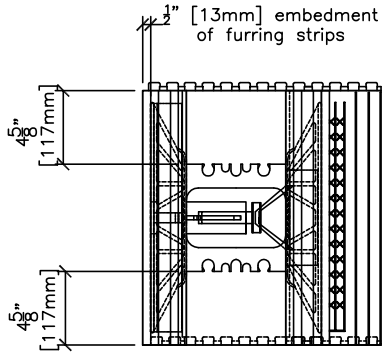

ELEVATION B-B



	FORM SIZES, in (mm)		
	4 (102)	6.25 (159)	8 (203)
Dimension A, in (mm)	4 (102)	6.25 (159)	8 (203)
Dimension B, in (mm)	9.5 (241)	11.75 (298)	13.5 (343)
Conc. Vol. (y^3)	0.043	0.065	0.081
Conc. Vol. (ft^3)	1.151	1.744	2.178
Conc. Vol. (m^3)	0.033	0.049	0.062
Outside Corner Wall Area (ft^2)	3.889	3.889	3.889
Inside Corner Wall Area (ft^2)	3.014	2.807	2.646

NOTES:

1. Forms are available as assembled (LOGIX PRO) or unassembled (or knock–down) form blocks (LOGIX KD Product drawings).
2. Concrete core thickness wider than 12" (305mm) are available using LOGIX Xtenders (See Logix Xtender Product drawing).
3. 6¼" [159mm] LOGIX Form shown.
4. Corner web not available with 4" 45deg Corner Forms.

The tables and drawings represented herein are believed to be accurate and conforming to current design and construction practices. However, the tables and drawings should be used as a reference guide only. The user shall check to ensure the drawing meets local building codes, design and construction practices by consulting local building officials and professionals, including any additional requirements. Logix reserves the right to make changes to the tables and drawings without notice and assumes no liability in connection with the use of the tables and drawings including modification, copying or distribution.

Reprinted 2017

Rev. Dec 24/16

5.1.9 - RIGHT HAND 45° FORM

All drawings are downloadable at www.logixicf.com

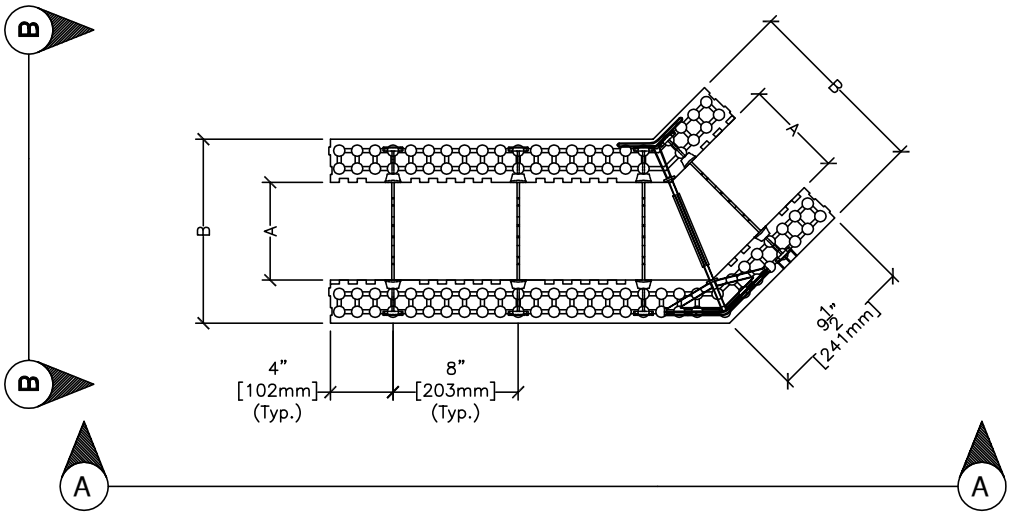

PLAN VIEW

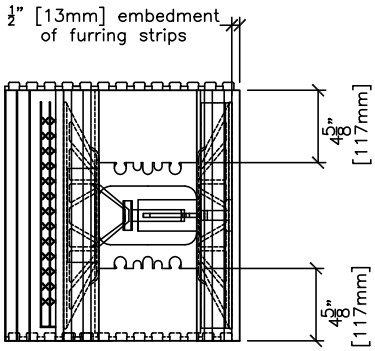

ELEVATION B-B

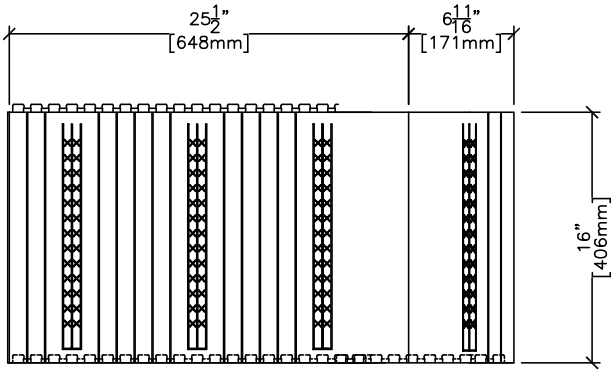

ELEVATION A-A

For clarity knobs partially removed in evelvation views.

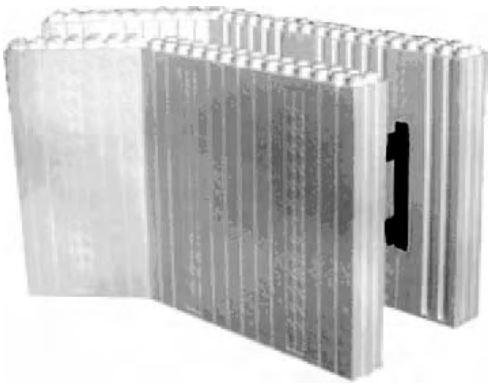

	FORM SIZES, in (mm)		
	4 (102)	6.25 (159)	8 (203)
Dimension A, in (mm)	4 (102)	6.25 (159)	8 (203)
Dimension B, in (mm)	9.5 (241)	11.75 (298)	13.5 (343)
Conc. Vol. (y^3)	0.043	0.065	0.081
Conc. Vol. (ft^3)	1.151	1.744	2.178
Conc. Vol. (m^3)	0.033	0.049	0.062
Outside Corner Wall Area (ft^2)	3.889	3.889	3.889
Inside Corner Wall Area (ft^2)	3.014	2.807	2.646

NOTES:

1. Forms are available as assembled (LOGIX PRO) or unassembled (or knock–down) form blocks (LOGIX KD Product drawings).
2. Concrete core thickness wider than 12" (305mm) are available using LOGIX Xtenders (See Logix Xtender Product drawing).
3. 6¼" [159mm] LOGIX Form shown.
4. Corner web not available with 4" 45deg Corner Forms.

The tables and drawings represented herein are believed to be accurate and conforming to current design and construction practices. However, the tables and drawings should be used as a reference guide only. The user shall check to ensure the drawing meets local building codes, design and construction practices by consulting local building officials and professionals, including any additional requirements. Logix reserves the right to make changes to the tables and drawings without notice and assumes no liability in connection with the use of the tables and drawings including modification, copying or distribution.

CAD DRAWINGS

5.1.10 - PILASTER FORM

All drawings are downloadable at www.logixicf.com

CAD DRAWINGS

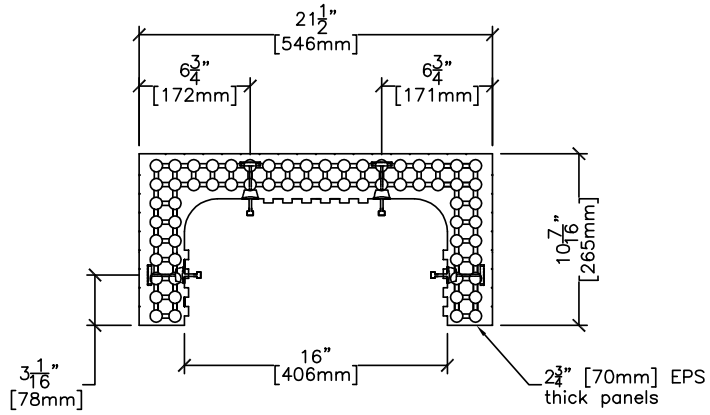

TOP VIEW

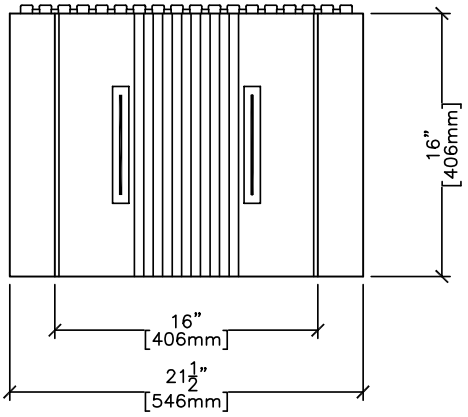

FRONT ELEVATION

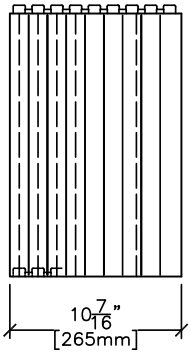

RIGHT
(LEFT SIDE SIMILAR)

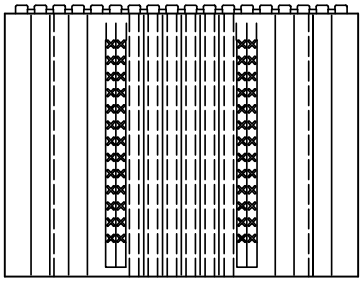

REAR ELEVATION

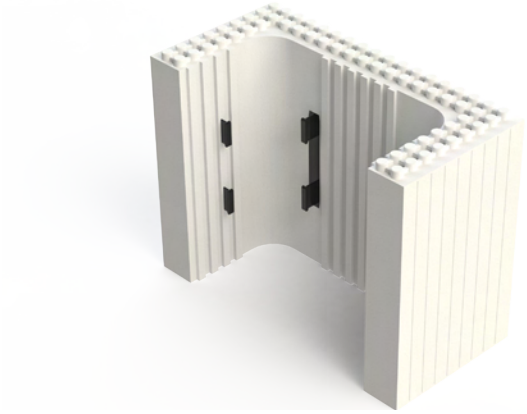

The tables and drawings represented herein are believed to be accurate and conforming to current design and construction practices. However, the tables and drawings should be used as a reference guide only. The user shall check to ensure the drawing meets local building codes, design and construction practices by consulting local building officials and professionals, including any additional requirements. Logix reserves the right to make changes to the tables and drawings without notice and assumes no liability in connection with the use of the tables and drawings including modification, copying or distribution.

5.1.11 - HALF HEIGHT STANDARD FORM

All drawings are downloadable at www.logixicf.com

NOTES:

1. $6\frac{1}{4}$" Half Height Standard Form shown

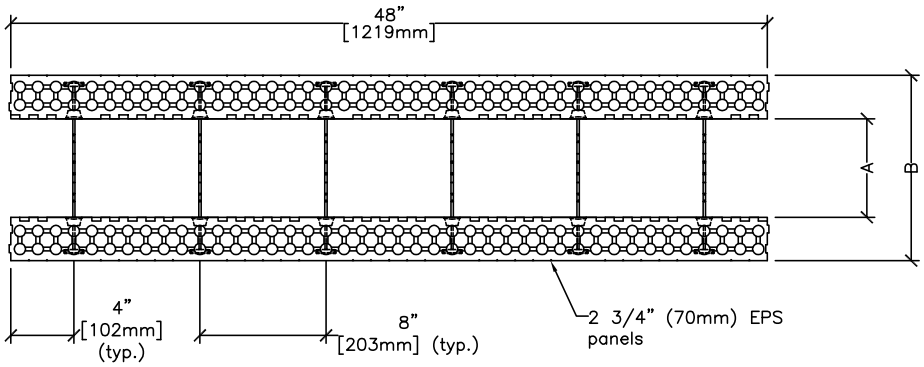

PLAN VIEW

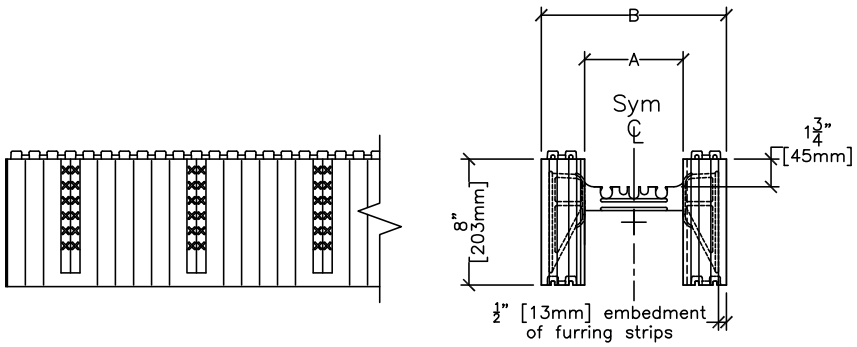

SIDE ELEVATION

END VIEW

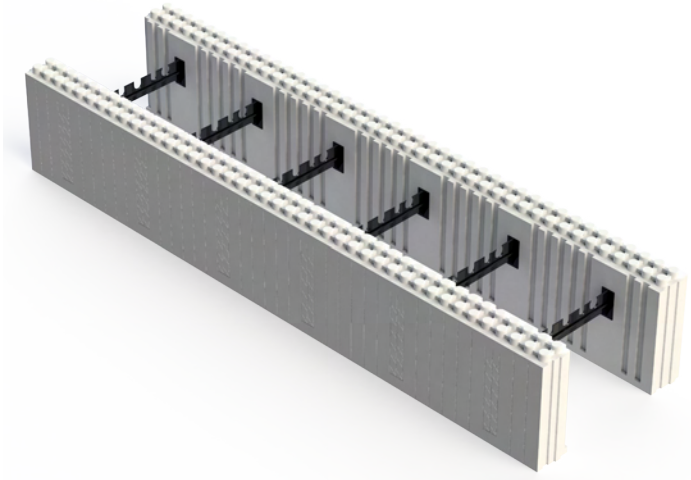

	FORM SIZES, in (mm)		
	4 (102)	6.25 (159)	8 (203)
Dimension A, in (mm)	4 (102)	6.25 (159)	8 (203)
Dimension B, in (mm)	9.5 (241)	11.75 (298)	13.5 (343)
Conc. Vol. (y^3)	0.033	0.051	0.066
Conc. Vol. (ft^3)	0.889	1.389	1.778
Conc. Vol. (m^3)	0.025	0.039	0.050
Wall Area (sf)	2.667	2.667	2.667

The tables and drawings represented herein are believed to be accurate and conforming to current design and construction practices. However, the tables and drawings should be used as a reference guide only. The user shall check to ensure the drawing meets local building codes, design and construction practices by consulting local building officials and professionals, including any additional requirements. Logix reserves the right to make changes to the tables and drawings without notice and assumes no liability in connection with the use of the tables and drawings including modification, copying or distribution.

CAD DRAWINGS

5.1.12 - HALF HEIGHT LEFT HAND CORNER FORM

All drawings are downloadable at www.logixicf.com

CAD DRAWINGS

NOTES:

1. 6¼" Half Height Left Hand Corner Form shown

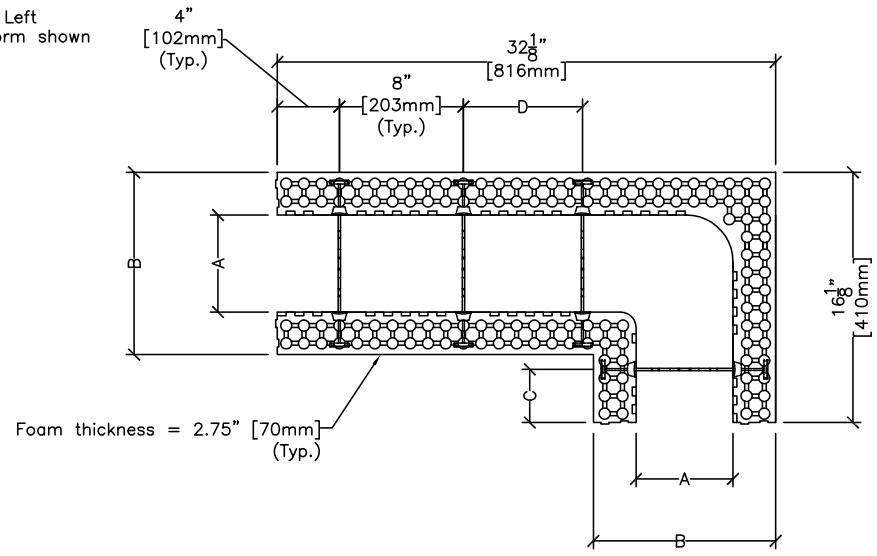

PLAN VIEW

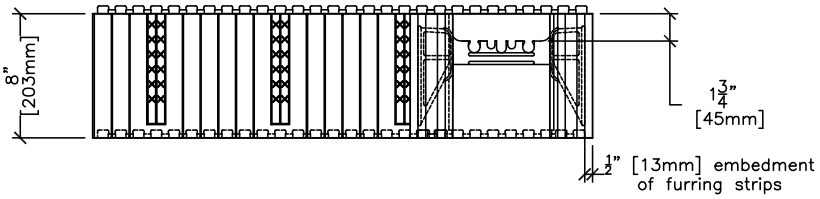

SIDE ELEVATION

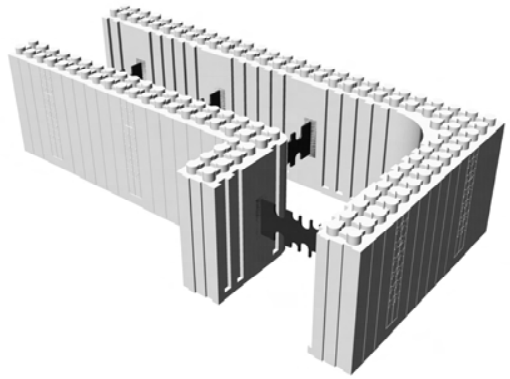

	FORM SIZES, in (mm)		
	4 (102)	6.25 (159)	8 (203)
Dimension A, in (mm)	4 (102)	6.25 (159)	8 (203)
Dimension B, in (mm)	9.5 (241)	11.75 (298)	13.5 (343)
Dimension C, in (mm)	3.5 (89)	3.375 (86)	2.25 (57)
Dimension D, in (mm)	7.67 (195)	7.67 (195)	6.125 (156)
Conc. Vol. (y^3)	0.026	0.039	0.047
Conc. Vol. (ft^3)	0.710	1.048	1.279
Conc. Vol. (m^3)	0.020	0.030	0.036
Outside Corner Wall Area (ft^2)	2.681	2.681	2.681
Inside Corner Wall Area (ft^2)	1.625	1.375	1.181

The tables and drawings represented herein are believed to be accurate and conforming to current design and construction practices. However, the tables and drawings should be used as a reference guide only. The user shall check to ensure the drawing meets local building codes, design and construction practices by consulting local building officials and professionals, including any additional requirements. Logix reserves the right to make changes to the tables and drawings without notice and assumes no liability in connection with the use of the tables and drawings including modification, copying or distribution.

Reprinted 2017

Rev. Dec 24/16

5.1.13 - HALF HEIGHT RIGHT HAND CORNER FORM

All drawings are downloadable at www.logixicf.com

NOTES:

1. 6¼" Half Height Right Hand Corner Form shown

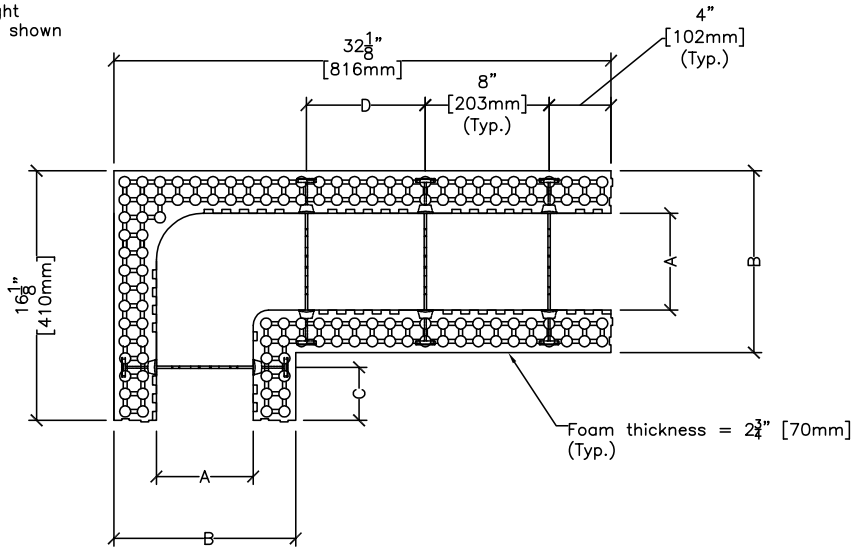

PLAN VIEW

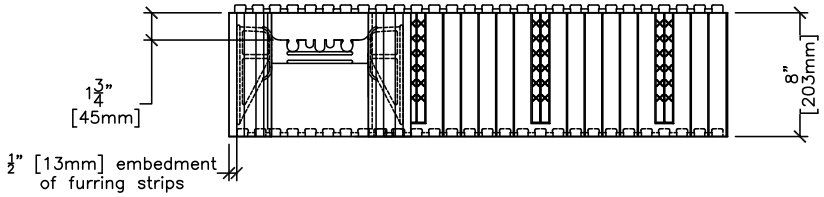

SIDE ELEVATION

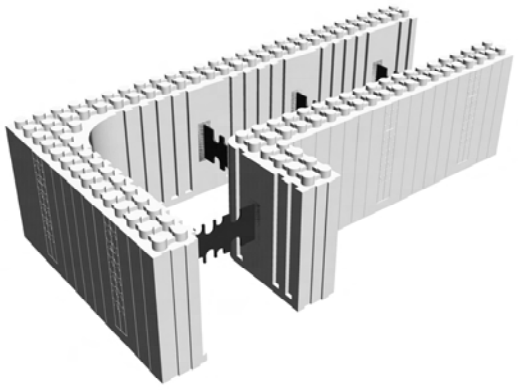

	FORM SIZES, in (mm)		
	4 (102)	6.25 (159)	8 (203)
Dimension A, in (mm)	4 (102)	6.25 (159)	8 (203)
Dimension B, in (mm)	9.5 (241)	11.75 (298)	13.5 (343)
Dimension C, in (mm)	3.5 (89)	3.375 (86)	2.25 (57)
Dimension D, in (mm)	7.67 (195)	7.67 (195)	6.125 (156)
Conc. Vol. (y^3)	0.026	0.039	0.047
Conc. Vol. (ft^3)	0.710	1.048	1.279
Conc. Vol. (m^3)	0.020	0.030	0.036
Outside Corner Wall Area (ft^2)	2.681	2.681	2.681
Inside Corner Wall Area (ft^2)	1.625	1.375	1.181

The tables and drawings represented herein are believed to be accurate and conforming to current design and construction practices. However, the tables and drawings should be used as a reference guide only. The user shall check to ensure the drawing meets local building codes, design and construction practices by consulting local building officials and professionals, including any additional requirements. Logix reserves the right to make changes to the tables and drawings without notice and assumes no liability in connection with the use of the tables and drawings including modification, copying or distribution.

5.1.14 - HALF HEIGHT LEFT HAND 45° FORM

All drawings are downloadable at www.logixicf.com

CAD DRAWINGS

NOTES:

1. 6¼" LOGIX Half Height Left Hand 45° Corner Form shown

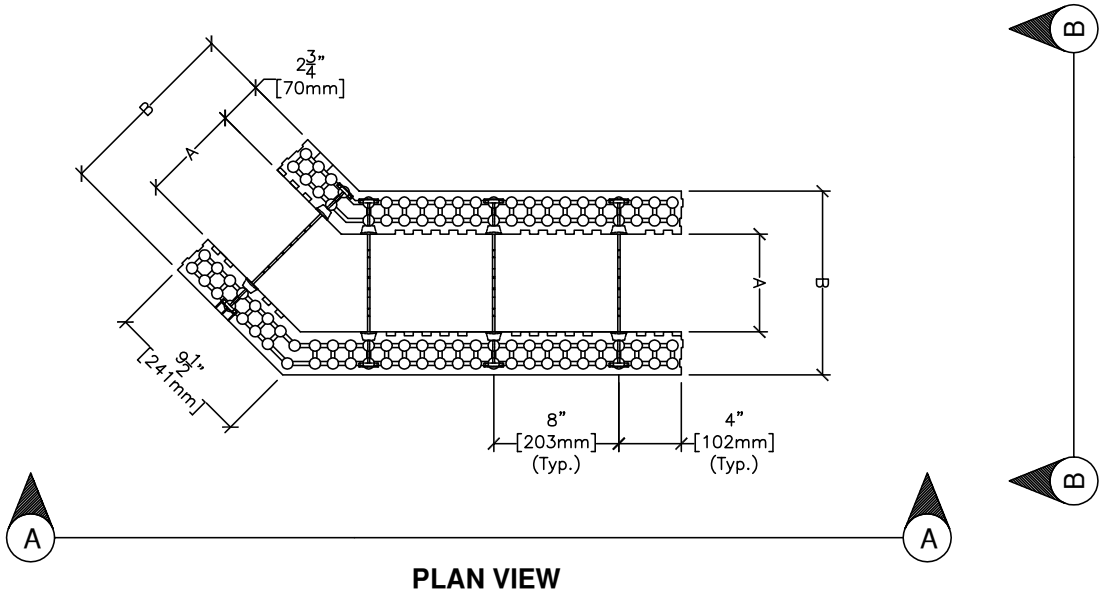

PLAN VIEW

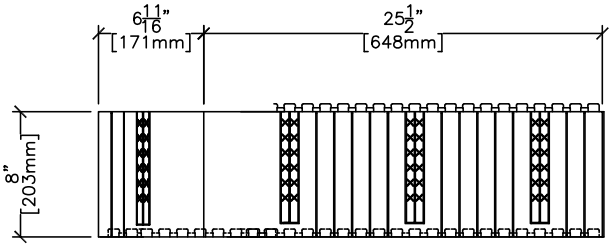

ELEVATION A-A

For clarity knobs partially removed in evelvation views.

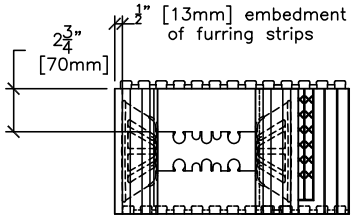

ELEVATION B-B

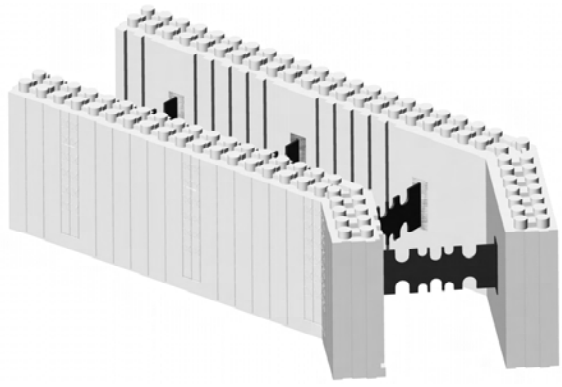

	FORM SIZES, in (mm)		
	4 (102)	6.25 (159)	8 (203)
Dimension A, in (mm)	4 (102)	6.25 (159)	8 (203)
Dimension B, in (mm)	9.5 (241)	11.75 (298)	13.5 (343)
Conc. Vol. (y^3)	0.021	0.032	0.040
Conc. Vol. (ft^3)	0.575	0.872	1.089
Conc. Vol. (m^3)	0.016	0.025	0.031
Outside Corner Wall Area (ft^2)	1.944	1.944	1.944
Inside Corner Wall Area (ft^2)	1.507	1.404	1.323

The tables and drawings represented herein are believed to be accurate and conforming to current design and construction practices. However, the tables and drawings should be used as a reference guide only. The user shall check to ensure the drawing meets local building codes, design and construction practices by consulting local building officials and professionals, including any additional requirements. Logix reserves the right to make changes to the tables and drawings without notice and assumes no liability in connection with the use of the tables and drawings including modification, copying or distribution.

Reprinted 2017

Rev. Dec 24/16

5.1.15 - HALF HEIGHT RIGHT HAND 45° FORM

All drawings are downloadable at www.logixicf.com

NOTES:

1. 6¼" Half Height Right Hand 45° Corner Form shown

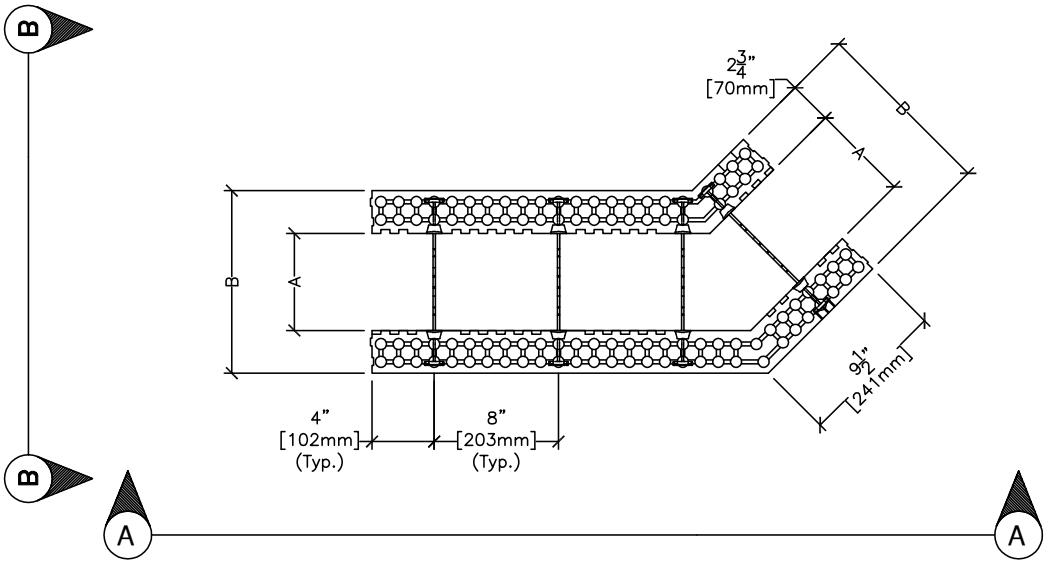

PLAN VIEW

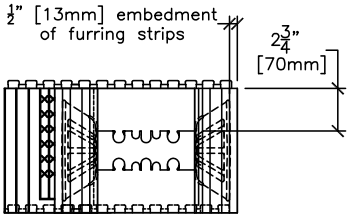

ELEVATION B-B

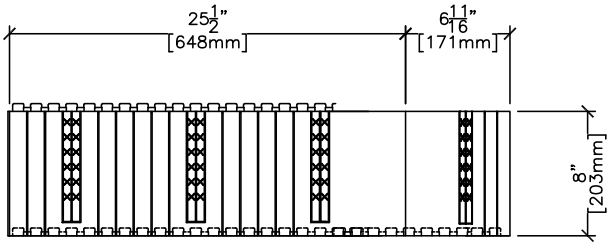

ELEVATION A-A

For clarity knobs partially removed in evelvation views.

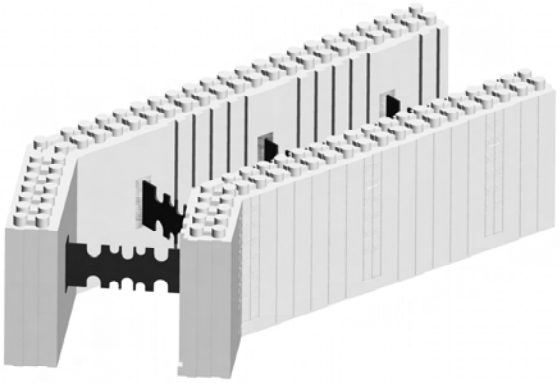

	FORM SIZES, in (mm)		
	4 (102)	6.25 (159)	8 (203)
Dimension A, in (mm)	4 (102)	6.25 (159)	8 (203)
Dimension B, in (mm)	9.5 (241)	11.75 (298)	13.5 (343)
Conc. Vol. (y^3)	0.021	0.032	0.040
Conc. Vol. (ft^3)	0.575	0.872	1.089
Conc. Vol. (m^3)	0.016	0.025	0.031
Outside Corner Wall Area (ft^2)	1.944	1.944	1.944
Inside Corner Wall Area (ft^2)	1.507	1.404	1.323

The tables and drawings represented herein are believed to be accurate and conforming to current design and construction practices. However, the tables and drawings should be used as a reference guide only. The user shall check to ensure the drawing meets local building codes, design and construction practices by consulting local building officials and professionals, including any additional requirements. Logix reserves the right to make changes to the tables and drawings without notice and assumes no liability in connection with the use of the tables and drawings including modification, copying or distribution.

CAD DRAWINGS

5.1.16 - END CAP & 4" HEIGHT ADJUSTER

All drawings are downloadable at www.logixicf.com

C A D D R A W I N G S

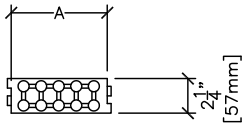

PLAN VIEW



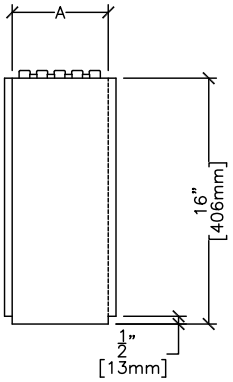



SIDE ELEVATION **END VIEW**

	FORM SIZES				
	4" (102mm)	**6.25" (159mm)**	**8" (203mm)**	**10" (254mm)**	**12" (305mm)**
A	4" (102mm)	6.25" (159mm)	8" (203mm)	10" (254mm)	12" (305mm)

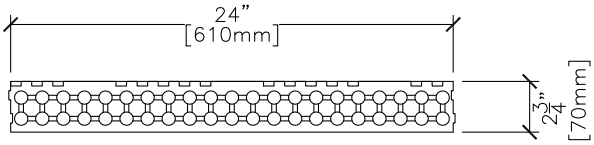

PLAN VIEW

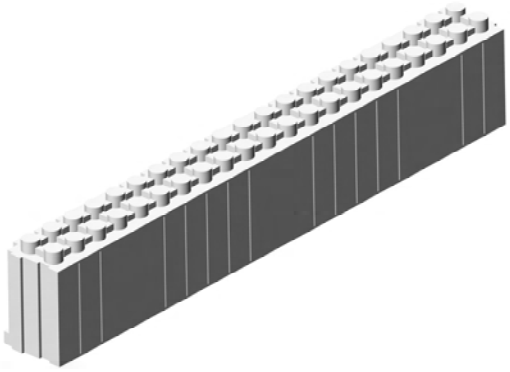

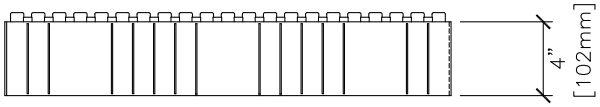



SIDE ELEVATION **END VIEW**

The tables and drawings represented herein are believed to be accurate and conforming to current design and construction practices. However, the tables and drawings should be used as a reference guide only. The user shall check to ensure the drawing meets local building codes, design and construction practices by consulting local building officials and professionals, including any additional requirements. Logix reserves the right to make changes to the tables and drawings without notice and assumes no liability in connection with the use of the tables and drawings including modification, copying or distribution.

5.1.17 - REBAR SLOT LOCATIONS - LOGIX PRO FORMS (1 of 4)

All drawings are downloadable at www.logixicf.com

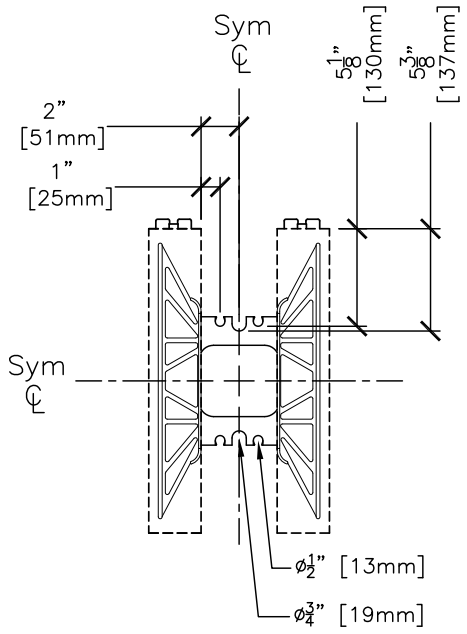

4" LOGIX PRO

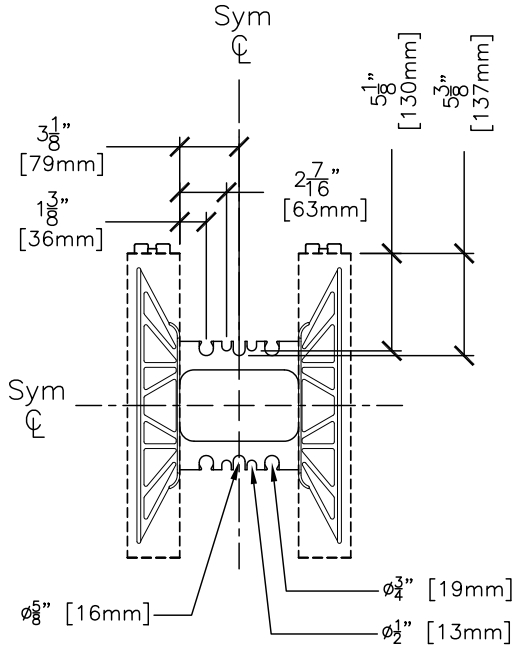

6 1/4" LOGIX PRO

CAD DRAWINGS

The tables and drawings represented herein are believed to be accurate and conforming to current design and construction practices. However, the tables and drawings should be used as a reference guide only. The user shall check to ensure the drawing meets local building codes, design and construction practices by consulting local building officials and professionals, including any additional requirements. Logix reserves the right to make changes to the tables and drawings without notice and assumes no liability in connection with the use of the tables and drawings including modification, copying or distribution.

5.1.17 - REBAR SLOT LOCATIONS - LOGIX PRO FORMS (2 of 4)

All drawings are downloadable at www.logixicf.com

CAD DRAWINGS

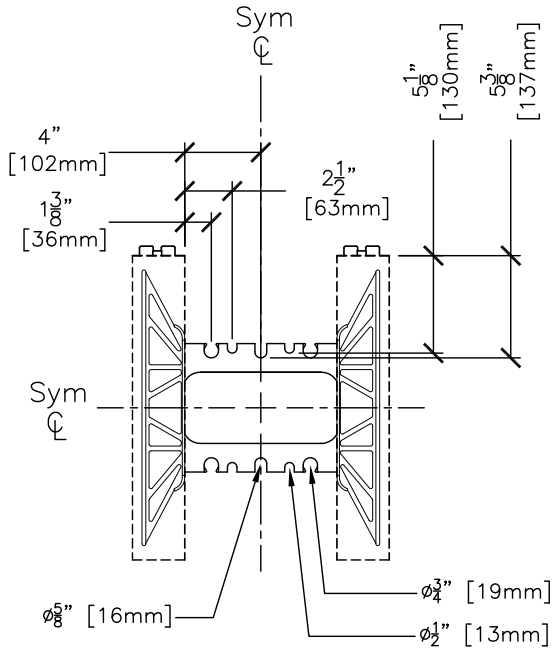

8" LOGIX PRO

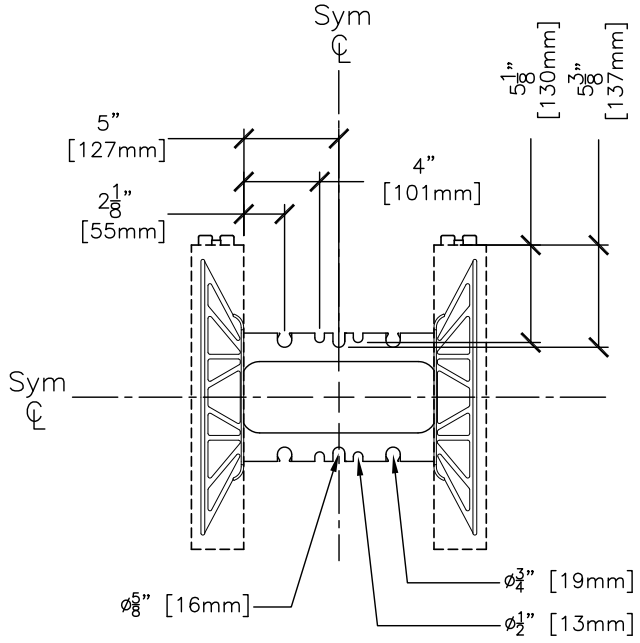

10" LOGIX PRO

The tables and drawings represented herein are believed to be accurate and conforming to current design and construction practices. However, the tables and drawings should be used as a reference guide only. The user shall check to ensure the drawing meets local building codes, design and construction practices by consulting local building officials and professionals, including any additional requirements. Logix reserves the right to make changes to the tables and drawings without notice and assumes no liability in connection with the use of the tables and drawings including modification, copying or distribution.

5.1.17 - REBAR SLOT LOCATIONS - LOGIX KD FORMS (3 of 4)

All drawings are downloadable at www.logixicf.com

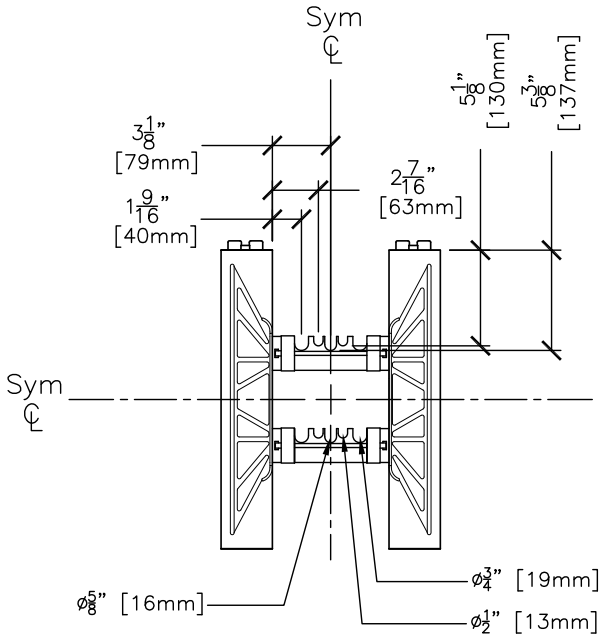

6 1/4" [159mm] LOGIX KD CONNECTORS

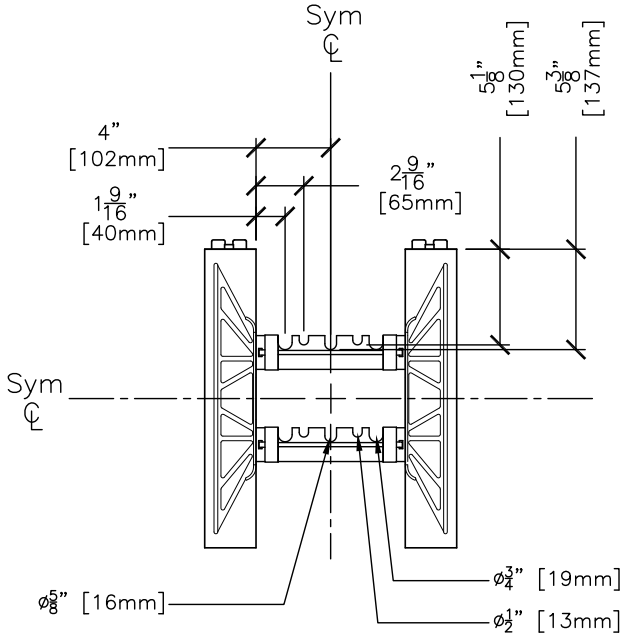

8" [203mm] LOGIX KD CONNECTORS

The tables and drawings represented herein are believed to be accurate and conforming to current design and construction practices. However, the tables and drawings should be used as a reference guide only. The user shall check to ensure the drawing meets local building codes, design and construction practices by consulting local building officials and professionals, including any additional requirements. Logix reserves the right to make changes to the tables and drawings without notice and assumes no liability in connection with the use of the tables and drawings including modification, copying or distribution.

5.1.17 - REBAR SLOT LOCATIONS - LOGIX KD FORMS (4 of 4)

All drawings are downloadable at www.logixicf.com

CAD DRAWINGS

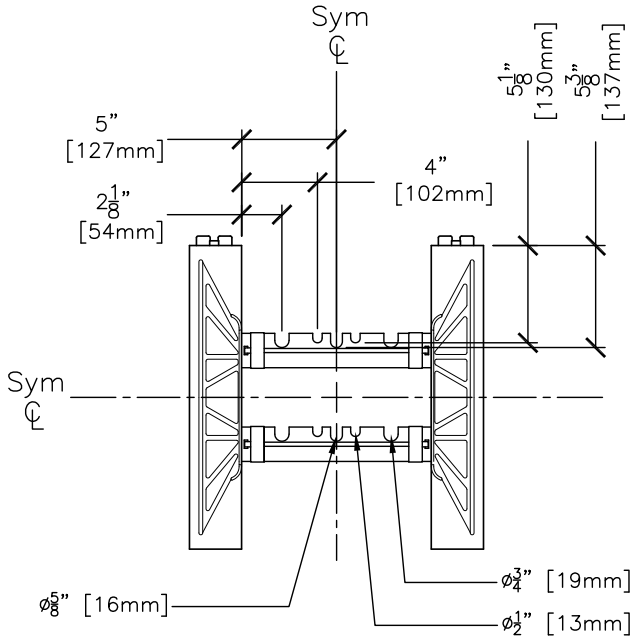

10" [254mm] LOGIX KD CONNECTORS

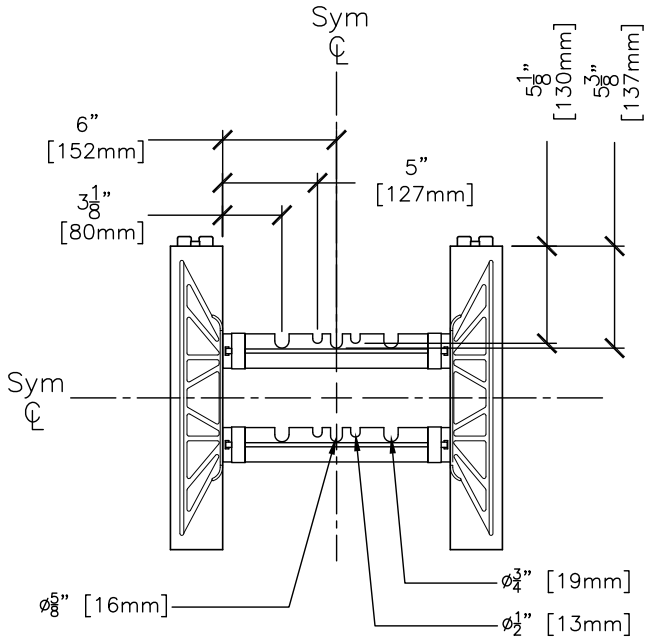

12" [305mm] LOGIX KD CONNECTORS

The tables and drawings represented herein are believed to be accurate and conforming to current design and construction practices. However, the tables and drawings should be used as a reference guide only. The user shall check to ensure the drawing meets local building codes, design and construction practices by consulting local building officials and professionals, including any additional requirements. Logix reserves the right to make changes to the tables and drawings without notice and assumes no liability in connection with the use of the tables and drawings including modification, copying or distribution.

5.1.18 - LOGIX KD FORMS
5.1.18.1 - LOGIX KD RIGHT-HAND CORNER FORMS

All drawings are downloadable at www.logixicf.com

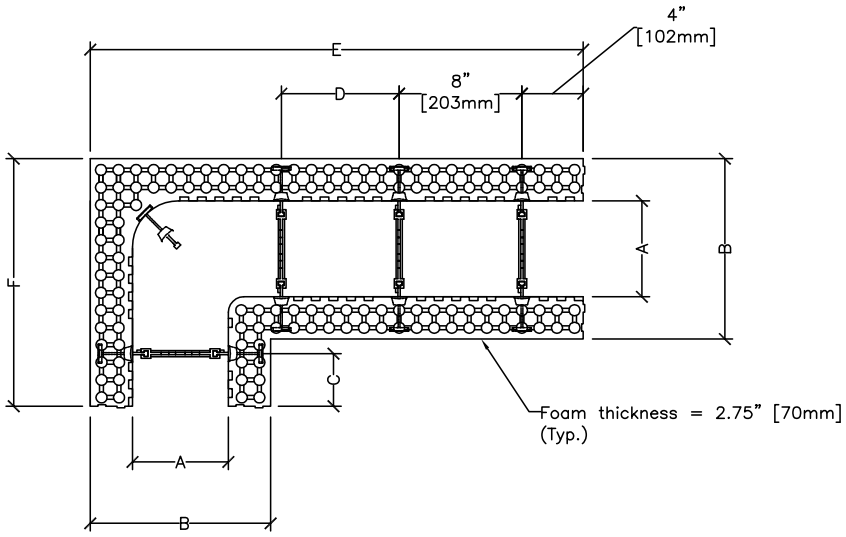

PLAN VIEW

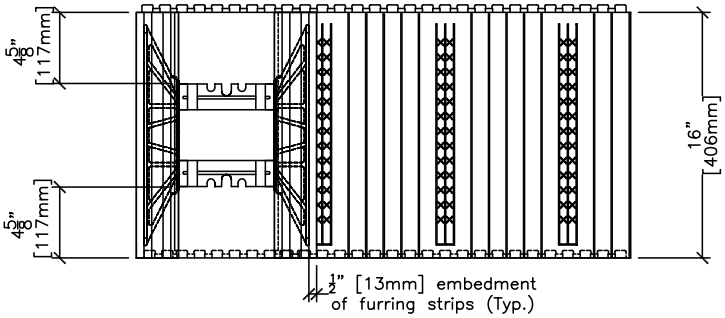

SIDE ELEVATION

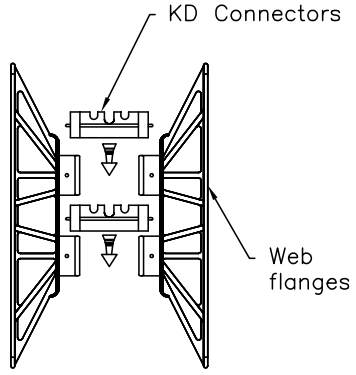

WEB COMPONENTS (NTS)

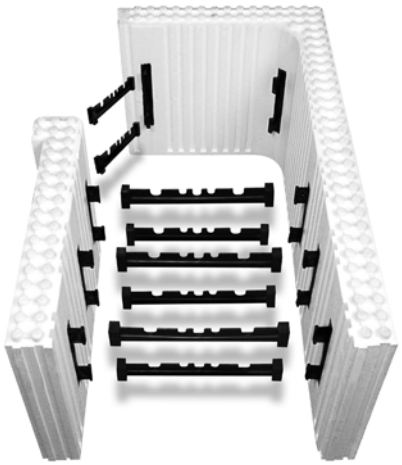

	FORM SIZES, in (mm)			
	4 (102)	6.25 (159)	8 (203)	10 (254)
Dimension A, in (mm)	N/A	6.25 (159)	8 (203)	10 (254)
Dimension B, in (mm)	N/A	11.75 (298)	13.5 (343)	15.5 (394)
Dimension C, in (mm)	N/A	3.375 (86)	2.25 (57)	2.125 (54)
Dimension D, in (mm)	N/A	7.67 (195)	6.125 (156)	5.875 (149)
Dimension E, in (mm)	N/A	32.125 (816)	32.125 (816)	34.5 (876)
Dimension F, in (mm)	N/A	16.125 (410)	16.125 (410)	18.5 (470)
Conc. Vol. (y^3)	N/A	0.078	0.095	0.128
Conc. Vol. (ft^3)	N/A	2.096	2.558	3.456
Conc. Vol. (m^3)	N/A	0.059	0.072	0.098
Outside Corner Wall Area (ft^2)	N/A	5.361	5.361	5.889
Inside Corner Wall Area (ft^2)	N/A	2.750	2.361	2.444

NOTES:

1. Drawings showing rebar slot locations will be available upon request.
2. For 12" Right Hand LOGIX KD Corner Form see next page.
3. Concrete core thickness wider than 12" (305mm) are available using LOGIX Xtenders (See Logix Xtender Product drawing).
4. 6 1/4" [159mm] LOGIX Corner Form shown.

The tables and drawings represented herein are believed to be accurate and conforming to current design and construction practices. However, the tables and drawings should be used as a reference guide only. The user shall check to ensure the drawing meets local building codes, design and construction practices by consulting local building officials and professionals, including any additional requirements. Logix reserves the right to make changes to the tables and drawings without notice and assumes no liability in connection with the use of the tables and drawings including modification, copying or distribution.

CAD DRAWINGS

5.1.18.1 - LOGIX KD RIGHT HAND CORNER FORMS CONTINUED

All drawings are downloadable at www.logixicf.com

CAD DRAWINGS

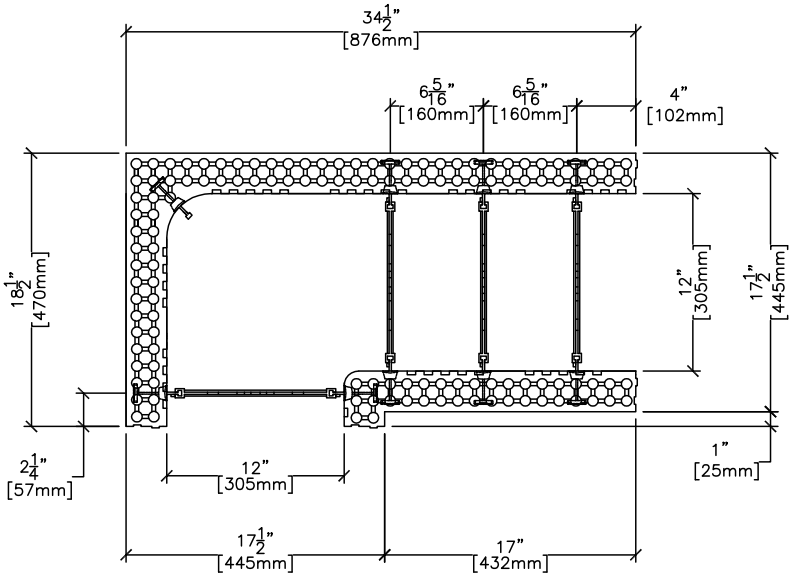

PLAN VIEW

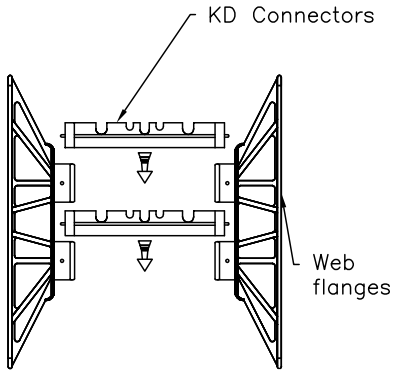

WEB COMPONENTS (NTS)

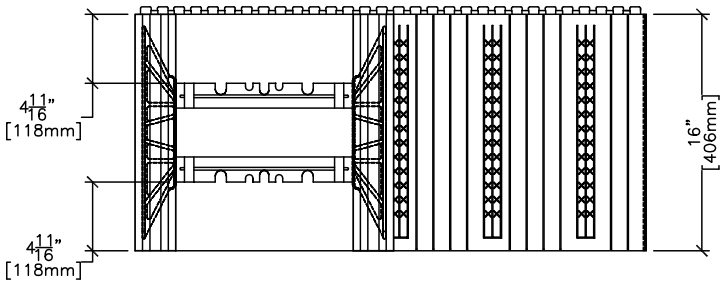

SIDE ELEVATION

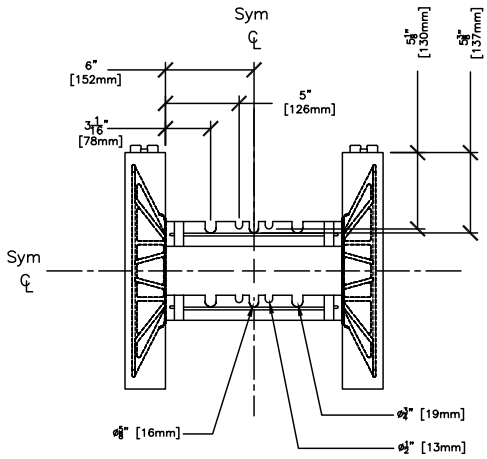

REBAR SLOT LOCATIONS

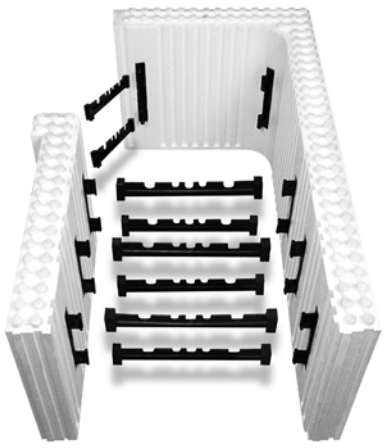

Conc. Vol. (y^3)	0.146
Conc. Vol. (ft^3)	3.929
Conc. Vol. (m^3)	0.111
Outside Corner Wall Area (ft^2)	5.889
Inside Corner Wall Area (ft^2)	2.000

NOTES:

1. Drawings showing rebar slot locations will be available upon request.
2. Concrete core thickness wider than 12" (305mm) are available using LOGIX Xtenders (See Logix Xtender Product drawing).

The tables and drawings represented herein are believed to be accurate and conforming to current design and construction practices. However, the tables and drawings should be used as a reference guide only. The user shall check to ensure the drawing meets local building codes, design and construction practices by consulting local building officials and professionals, including any additional requirements. Logix reserves the right to make changes to the tables and drawings without notice and assumes no liability in connection with the use of the tables and drawings including modification, copying or distribution.

5.1.18.2 - LOGIX KD LEFT HAND CORNER FORMS

All drawings are downloadable at www.logixicf.com

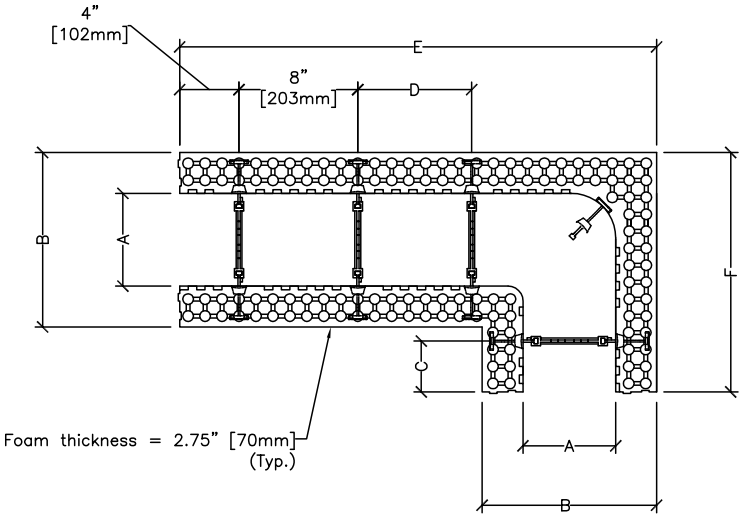

PLAN VIEW

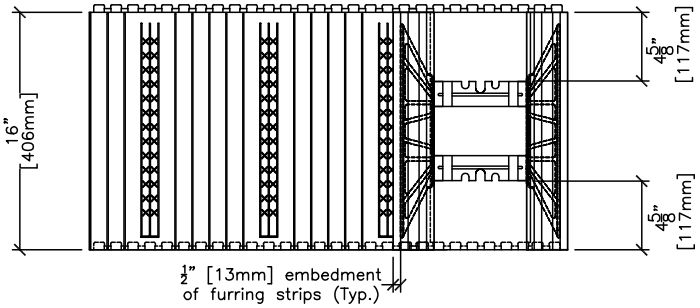

SIDE ELEVATION

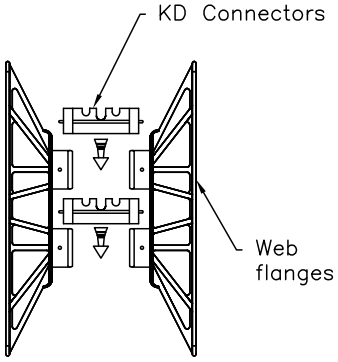

WEB COMPONENTS (NTS)

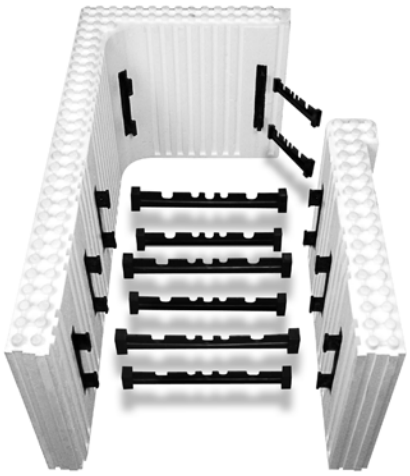

	FORM SIZES, in (mm)			
	4 (102)	6.25 (159)	8 (203)	10 (254)
Dimension A, in (mm)	N/A	6.25 (159)	8 (203)	10 (254)
Dimension B, in (mm)	N/A	11.75 (298)	13.5 (343)	15.5 (394)
Dimension C, in (mm)	N/A	3.375 (86)	2.25 (57)	2.125 (54)
Dimension D, in (mm)	N/A	7.67 (195)	6.125 (156)	5.875 (149)
Dimension E, in (mm)	N/A	32.125 (816)	32.125 (816)	34.5 (876)
Dimension F, in (mm)	N/A	16.125 (410)	16.125 (410)	18.5 (470)
Conc. Vol. (y^3)	N/A	0.078	0.095	0.128
Conc. Vol. (ft^3)	N/A	2.096	2.558	3.456
Conc. Vol. (m^3)	N/A	0.059	0.072	0.098
Outside Corner Wall Area (ft^2)	N/A	5.361	5.361	5.889
Inside Corner Wall Area (ft^2)	N/A	2.750	2.361	2.444

NOTES:

1. Drawings showing rebar slot locations will be available upon request.
2. For 12" Right Hand LOGIX KD Corner Form see next page.
3. Concrete core thickness wider than 12" (305mm) are available using LOGIX Xtenders (See Logix Xtender Product drawing).
4. 6 1/4" [159mm] LOGIX Corner Form shown.

The tables and drawings represented herein are believed to be accurate and conforming to current design and construction practices. However, the tables and drawings should be used as a reference guide only. The user shall check to ensure the drawing meets local building codes, design and construction practices by consulting local building officials and professionals, including any additional requirements. Logix reserves the right to make changes to the tables and drawings without notice and assumes no liability in connection with the use of the tables and drawings including modification, copying or distribution.

CAD DRAWINGS

5.1.18.2 - LOGIX KD LEFT HAND CORNER FORMS CONTINUED

All drawings are downloadable at www.logixicf.com

CAD DRAWINGS

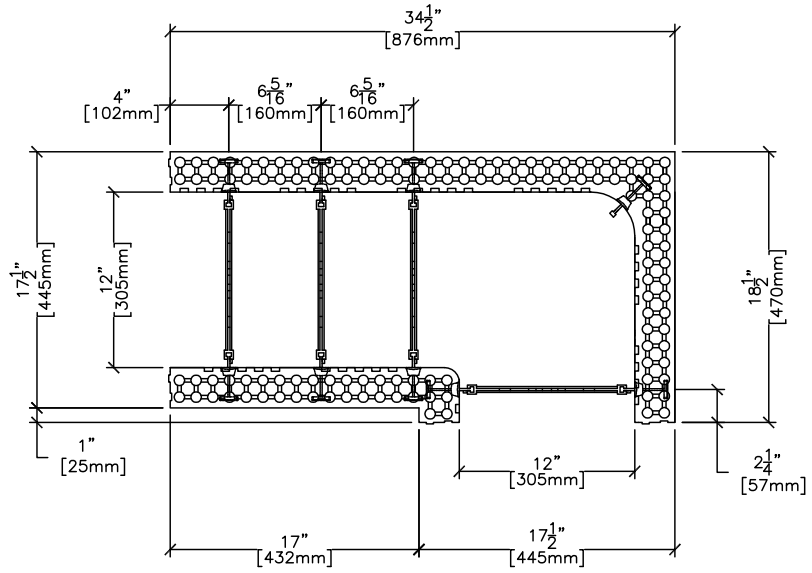

PLAN VIEW

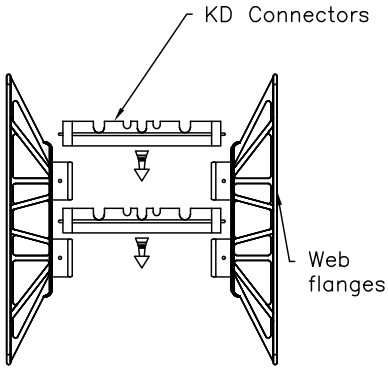

WEB COMPONENTS (NTS)

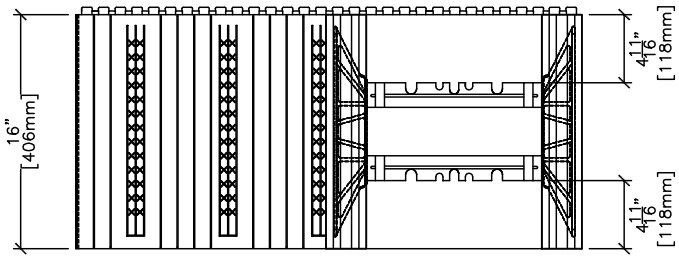

SIDE ELEVATION

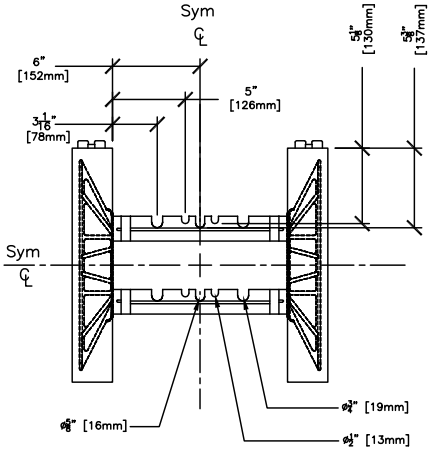

REBAR SLOT LOCATIONS

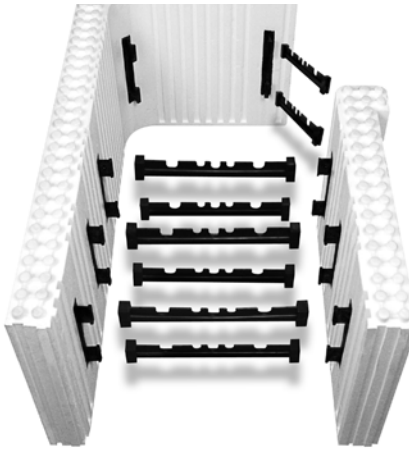

Conc. Vol. (y^3)	0.146
Conc. Vol. (ft^3)	3.929
Conc. Vol. (m^3)	0.111
Outside Corner Wall Area (ft^2)	5.889
Inside Corner Wall Area (ft^2)	2.000

NOTES:

1. Drawings showing rebar slot locations will be available upon request.
2. Concrete core thickness wider than 12" (305mm) are available using LOGIX Xtenders (See Logix Xtender Product drawing).

The tables and drawings represented herein are believed to be accurate and conforming to current design and construction practices. However, the tables and drawings should be used as a reference guide only. The user shall check to ensure the drawing meets local building codes, design and construction practices by consulting local building officials and professionals, including any additional requirements. Logix reserves the right to make changes to the tables and drawings without notice and assumes no liability in connection with the use of the tables and drawings including modification, copying or distribution.

5.1.18.3 - LOGIX KD FORMS

All drawings are downloadable at www.logixicf.com

LOGIX KNOCK DOWN PANELS

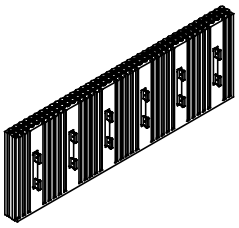

Standard

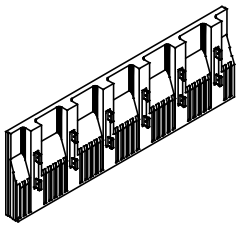

Taper Top

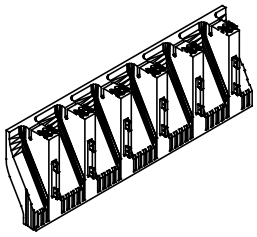

Brick Ledge

LOGIX KNOCK DOWN FORM COMBINATIONS

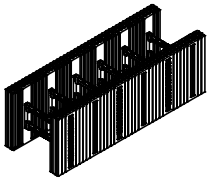

Standard—Standard

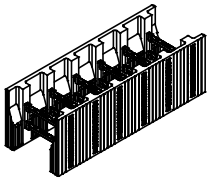

Taper Top—Taper Top

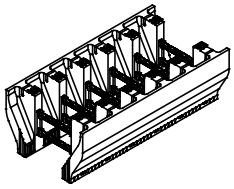

Brick Ledge—Brick Ledge

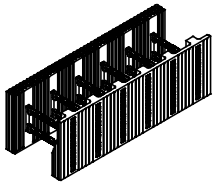

Standard—Taper Top

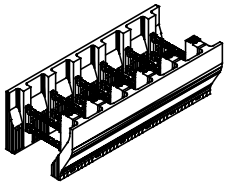

Taper Top—Brick Ledge

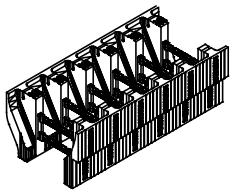

Brick Ledge—Transition Block

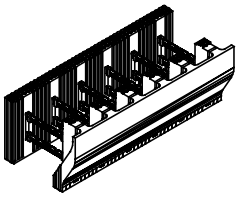

Standard—Brick Ledge

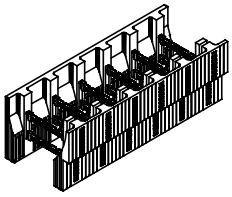

Taper Top—Transition Block

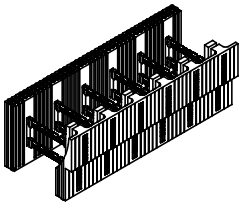

Standard—Transition Block

CAD DRAWINGS

Reprinted 2017

Rev. Dec 24/16

5.1.18.4 - LOGIX KD STANDARD FORM

All drawings are downloadable at www.logixicf.com

CAD DRAWINGS

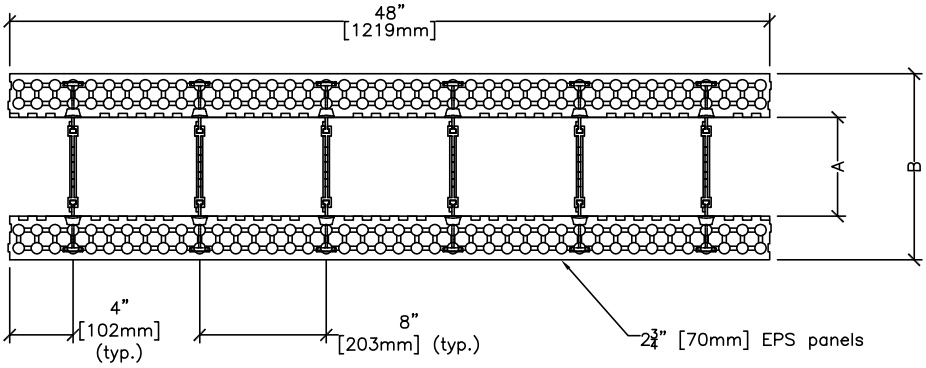

PLAN VIEW

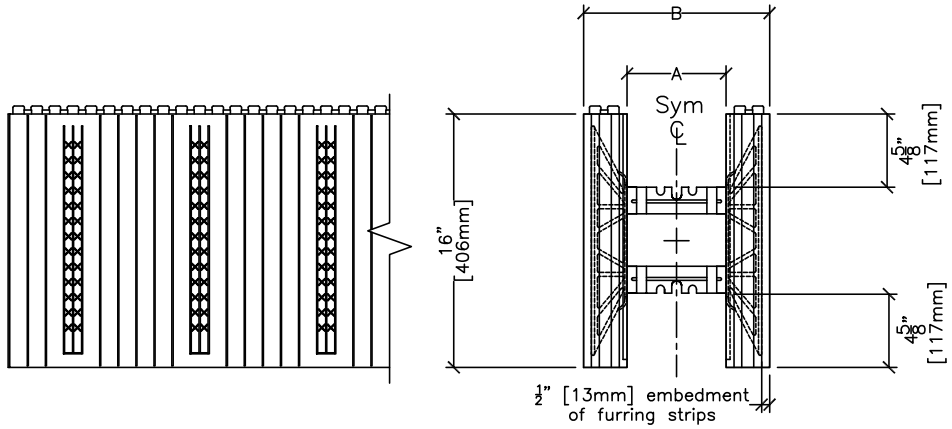

SIDE ELEVATION **END VIEW**



	FORM SIZES, in (mm)			
	6.25 (159)	8 (203)	10 (254)	12 (305)
Dimension A, in (mm)	6.25 (159)	8 (203)	10 (254)	12 (305)
Dimension B, in (mm)	11.75 (298)	13.5 (343)	15.5 (394)	17.5 (445)
Conc. Vol. (y^3)	0.103	0.132	0.165	0.198
Conc. Vol. (ft^3)	2.778	3.556	4.444	5.333
Conc. Vol. (m^3)	0.079	0.101	0.126	0.151

NOTES:

1. Wall area per block or panel = 5.333 ft^2
2. Drawings showing rebar slot locations will be available upon request.
3. For 12" Right Hand LOGIX KD Corner Form see Pg 3/4 or 4/4.
4. Concrete core thickness wider than 12" (305mm) are available using LOGIX Xtenders (See Logix Xtender Product drawing).
5. 6 1/4" [159mm] LOGIX Form shown.

The tables and drawings represented herein are believed to be accurate and conforming to current design and construction practices. However, the tables and drawings should be used as a reference guide only. The user shall check to ensure the drawing meets local building codes, design and construction practices by consulting local building officials and professionals, including any additional requirements. Logix reserves the right to make changes to the tables and drawings without notice and assumes no liability in connection with the use of the tables and drawings including modification, copying or distribution.

5.1.20 - LOGIX HORIZONTAL & VERTICAL STEEL HOOKS

All drawings are downloadable at www.logixicf.com

HORIZONTAL HOOK CONNECTING STANDARD TO STANDARD FORMS – PLAN VIEW

(Applicable for all LOGIX Standard Form sizes)

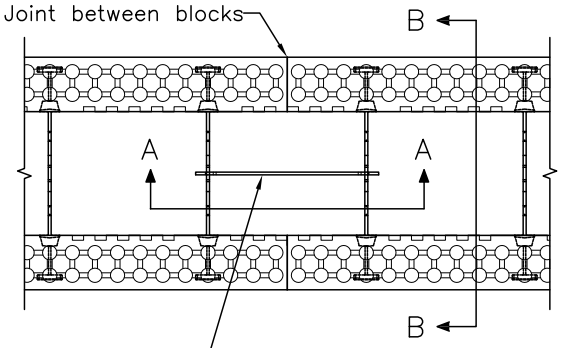

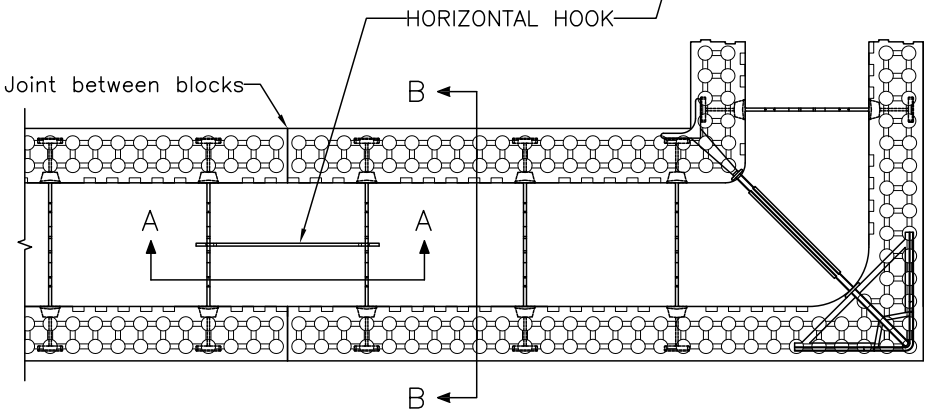

HORIZONTAL HOOK CONNECTING STANDARD TO CORNER FORMS – PLAN VIEW

(see Notes)

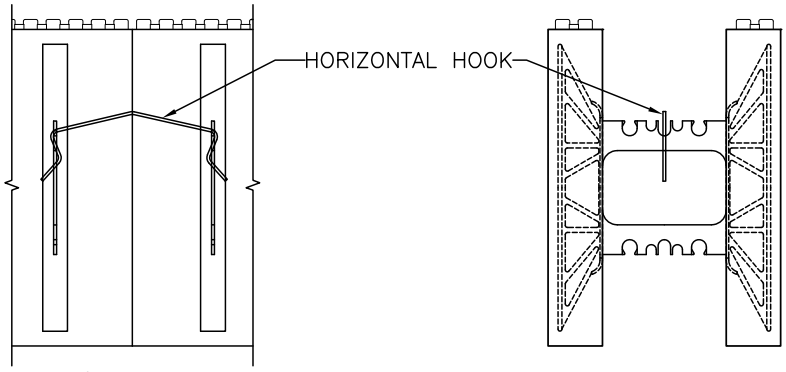

SECTION A–A

SECTION B–B

NOTES:

1. Applicable for connecting 4" or 6.25" LOGIX Standard Forms to 4" or 6.25" LOGIX Corner Forms.
2. Use traditional zip ties when connecting the shorter legs of the 8", 10" or 12" LOGIX Corner Forms to LOGIX Standard Forms.
3. When connecting the shorter leg of the 4" LOGIX Corner Form be sure to connect the Horizontal Hook at the web's center rebar slot.

The tables and drawings represented herein are believed to be accurate and conforming to current design and construction practices. However, the tables and drawings should be used as a reference guide only. The user shall check to ensure the drawing meets local building codes, design and construction practices by consulting local building officials and professionals, including any additional requirements. Logix reserves the right to make changes to the tables and drawings without notice and assumes no liability in connection with the use of the tables and drawings including modification, copying or distribution.

5.1.20 - LOGIX HORIZONTAL & VERTICAL STEEL HOOKS CONTINUED

All drawings are downloadable at www.logixicf.com

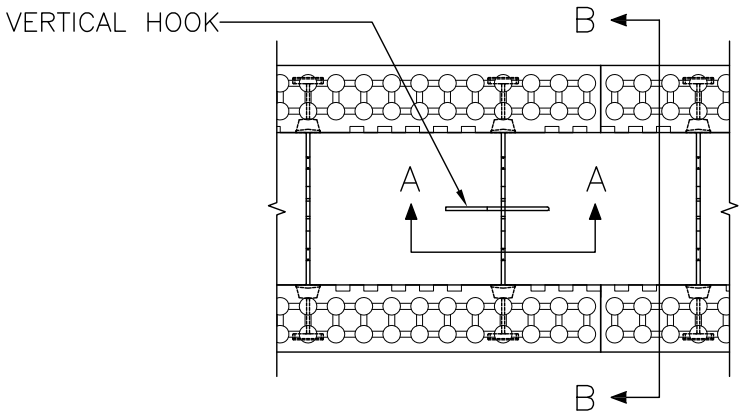

VERTICAL HOOK CONNECTING COURSES – PLAN VIEW

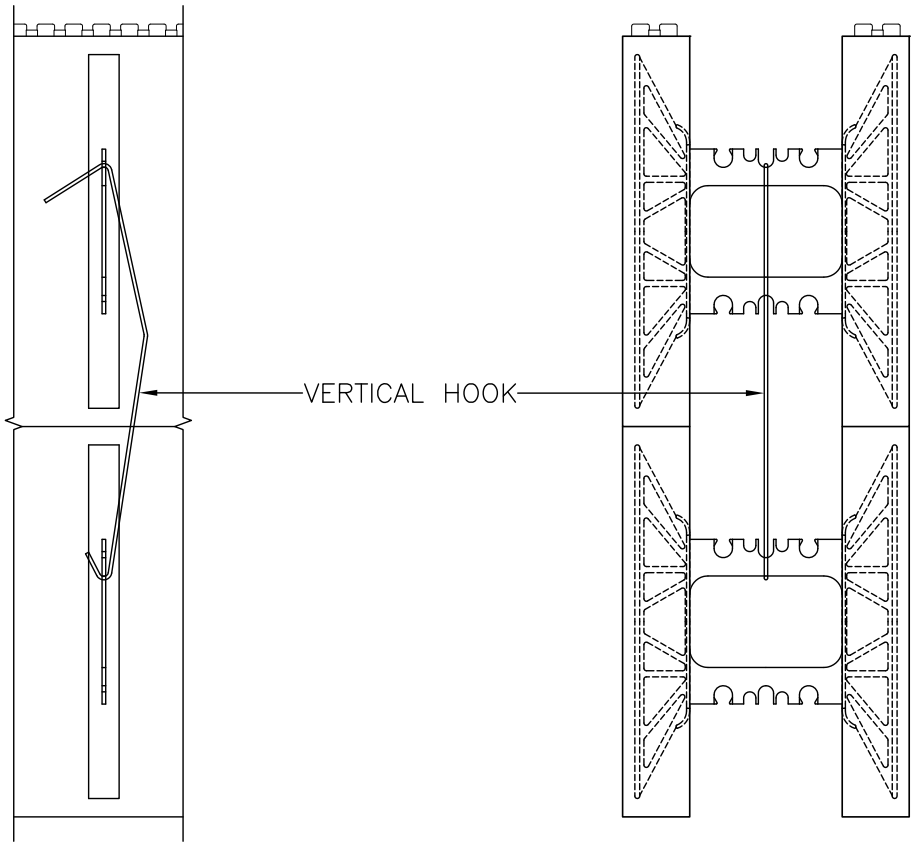

SECTION A–A

SECTION B–B

CAD DRAWINGS

The tables and drawings represented herein are believed to be accurate and conforming to current design and construction practices. However, the tables and drawings should be used as a reference guide only. The user shall check to ensure the drawing meets local building codes, design and construction practices by consulting local building officials and professionals, including any additional requirements. Logix reserves the right to make changes to the tables and drawings without notice and assumes no liability in connection with the use of the tables and drawings including modification, copying or distribution.

5.1.22 - LOGIX XTENDER

All drawings are downloadable at www.logixicf.com

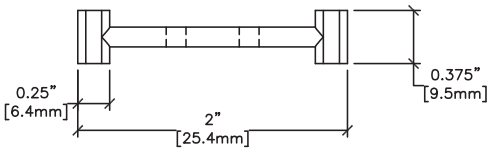

PLAN VIEW

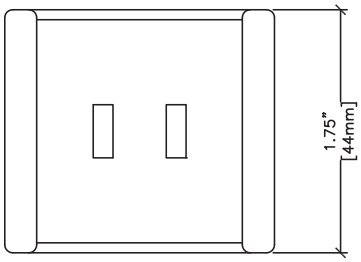

SIDE ELEVATION

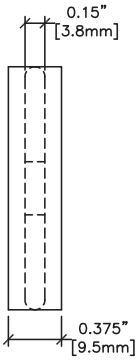

END VIEW



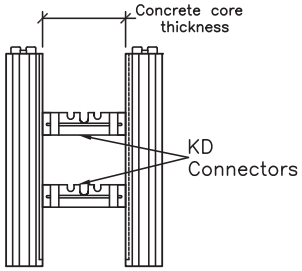

SIDE ELEVATION (without Xtenders)

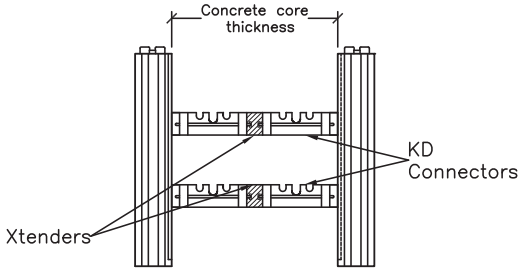

SIDE ELEVATION (with Xtenders)

CONCRETE CORE THICKNESS					
		KD Connector Size			
		6.25" (159mm)	8" (203mm)	10" (254mm)	12" (305mm)
KD Connector Size	4" (102mm)	10.25" (260mm)	12" (305mm)	14" (356mm)	16" (406mm)
	6.25" (159mm)	12.5" (318mm)	14.25" (362mm)	16.25" (413mm)	18.25" (464mm)
	8" (203mm)	14.25" (362mm)	16" (406mm)	18" (457mm)	20" (508mm)
	10" (254mm)	16.25" (413mm)	18" (457mm)	20" (508mm)	22" (559mm)
	12" (305mm)E	18.25" (464mm)	20" (508mm)	22" (559mm)	24" (610mm)

NOTES:

1. Table lists concrete core thickness using two KD Connectors with one Xtender.

The tables and drawings represented herein are believed to be accurate and conforming to current design and construction practices. However, the tables and drawings should be used as a reference guide only. The user shall check to ensure the drawing meets local building codes, design and construction practices by consulting local building officials and professionals, including any additional requirements. Logix reserves the right to make changes to the tables and drawings without notice and assumes no liability in connection with the use of the tables and drawings including modification, copying or distribution.

5.1.23 - LOGIX T-WALL

All drawings are downloadable at www.logixicf.com

CAD DRAWINGS

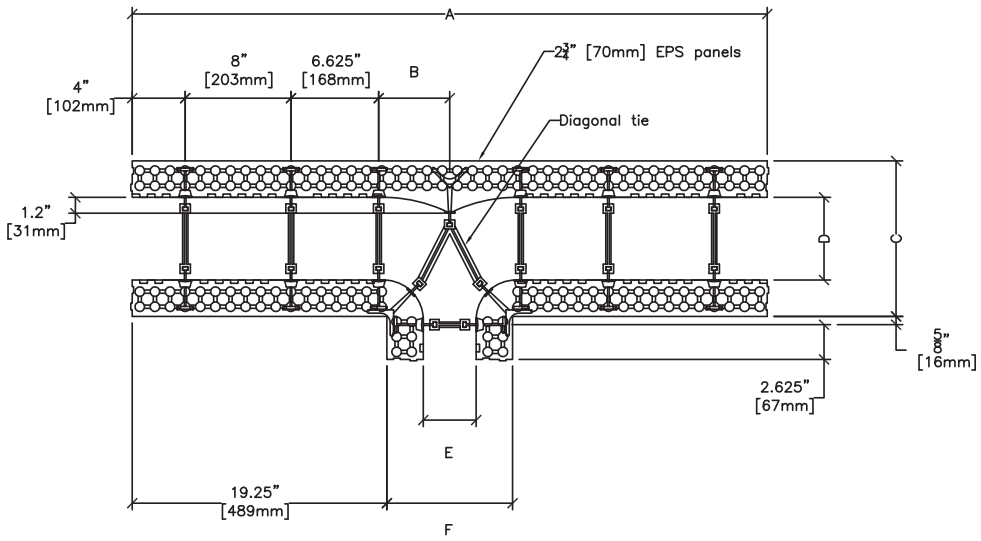

LONG T-WALL
PLAN VIEW

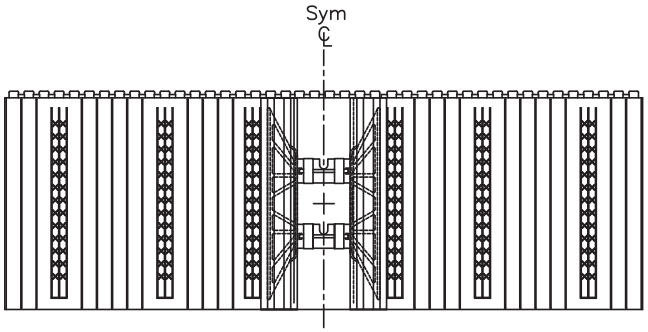

LONG T-WALL
SIDE ELEVATION

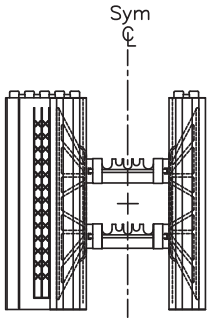

LONG T-WALL
END VIEW

	T-WALL SIZES							
	6¼" to 4" (159mm to 102mm)	6¼" to 6¼" (159mm to 159mm)	8" to 4" (203mm to 102mm)	8" to 6¼" (203mm to 159mm)	10" to 4" (254mm to 102mm)*	10" to 6¼" (254mm to 159mm)*	12" to 4" (305mm to 102mm)*	12" to 6¼" (305mm to 159mm)*
A	48" (1219mm)	50.25" (1276mm)	48" (1219mm)	50.25" (1276mm)	48" (1219mm)	50.25" (1276mm)	48" (1219mm)	50.25" (1276mm)
B	5.375" (137mm)	6.5" (165mm)	5.375" (137mm)	6.5" (165mm)	5.375" (137mm)	6.5" (165mm)	5.375" (137mm)	6.5" (165mm)
C	11.75" (298mm)	11.75" (298mm)	13.5" (343mm)	13.5" (343mm)	15.5" (394mm)	15.5" (394mm)	17.5" (445mm)	17.5" (445mm)
D	6.25" (159mm)	6.25" (159mm)	8" (203mm)	8" (203mm)	10" (254mm)	10" (254mm)	12" (305mm)	12" (305mm)
E	4" (102mm)	6.25" (159mm)	4" (102mm)	6.25" (159mm)	4" (102mm)	6.25" (159mm)	4" (102mm)	6.25" (159mm)
F	9.5" (241mm)	11.75" (298mm)	9.5" (241mm)	11.75" (298mm)	9.5" (241mm)	11.75" (298mm)	9.5" (241mm)	11.75" (298mm)

*Assembled without diagonal tie

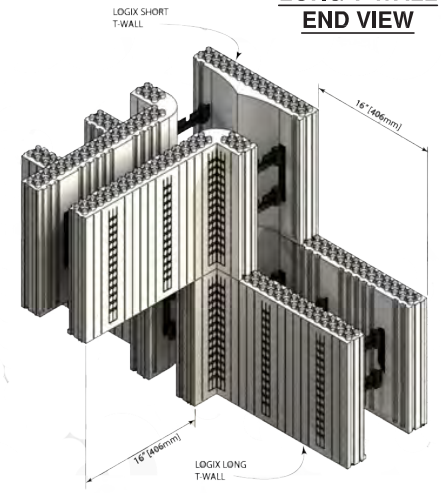

The tables and drawings represented herein are believed to be accurate and conforming to current design and construction practices. However, the tables and drawings should be used as a reference guide only. The user shall check to ensure the drawing meets local building codes, design and construction practices by consulting local building officials and professionals, including any additional requirements. Logix reserves the right to make changes to the tables and drawings without notice and assumes no liability in connection with the use of the tables and drawings including modification, copying or distribution.

All drawings are downloadable at www.logixicf.com

	T-WALL SIZES							
	6¼" to 4" (159mm to 102mm)	6¼" to 6¼" (159mm to 159mm)	8" to 4" (203mm to 102mm)	8" to 6¼" (203mm to 159mm)	10" to 4" (254mm to 102mm)*	10" to 6¼" (254mm to 159mm)*	12" to 4" (305mm to 102mm)*	12" to 6¼" (305mm to 159mm)*
A	16" (406mm)	18.25" (464mm)	16" (406mm)	18.25" (464mm)	16" (406mm)	18.25" (464mm)	16" (406mm)	18.25" (464mm)
B	5.375" (137mm)	6.5" (165mm)	5.375" (137mm)	6.5" (165mm)	5.375" (137mm)	6.5" (165mm)	5.375" (137mm)	6.5" (165mm)
C	11.75" (298mm)	11.75" (298mm)	13.5" (343mm)	13.5" (343mm)	15.5" (394mm)	15.5" (394mm)	17.5" (445mm)	17.5" (445mm)
D	6.25" (159mm)	6.25" (159mm)	8" (203mm)	8" (203mm)	10" (254mm)	10" (254mm)	12" (305mm)	12" (305mm)
E	4" (102mm)	6.25" (159mm)	4" (102mm)	6.25" (159mm)	4" (102mm)	6.25" (159mm)	4" (102mm)	6.25" (159mm)
F	9.5" (241mm)	11.75" (298mm)	9.5" (241mm)	11.75" (298mm)	9.5" (241mm)	11.75" (298mm)	9.5" (241mm)	11.75" (298mm)

*Assembled without diagonal tie

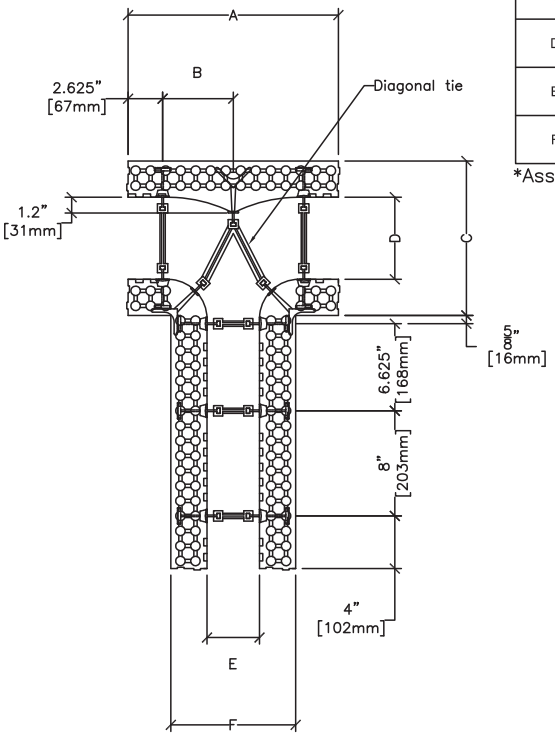

SHORT T-WALL PLAN VIEW

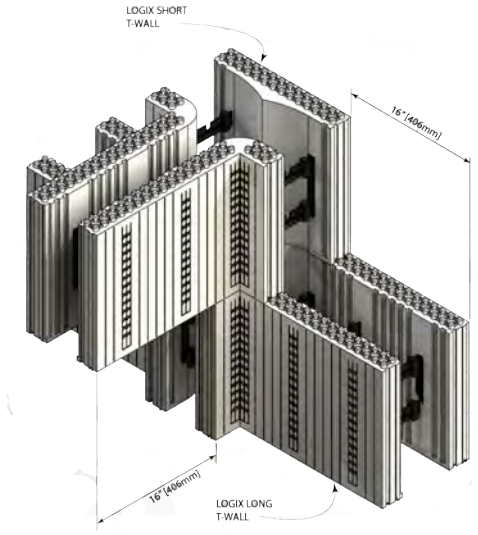

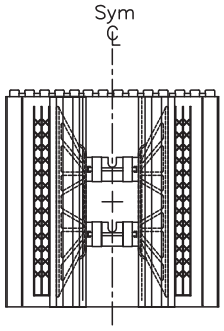

LONG T-WALL

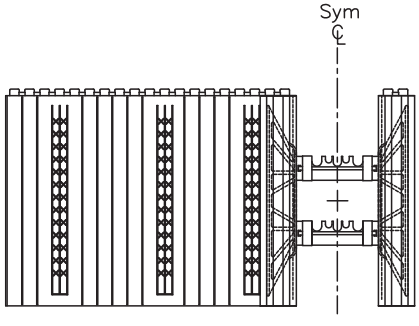

LONG T-WALL

The tables and drawings represented herein are believed to be accurate and conforming to current design and construction practices. However, the tables and drawings should be used as a reference guide only. The user shall check to ensure the drawing meets local building codes, design and construction practices by consulting local building officials and professionals, including any additional requirements. Logix reserves the right to make changes to the tables and drawings without notice and assumes no liability in connection with the use of the tables and drawings including modification, copying or distribution.

CAD DRAWINGS

5.1.24 - LOGIX D-Rv

All drawings are downloadable at www.logixicf.com

CAD DRAWINGS

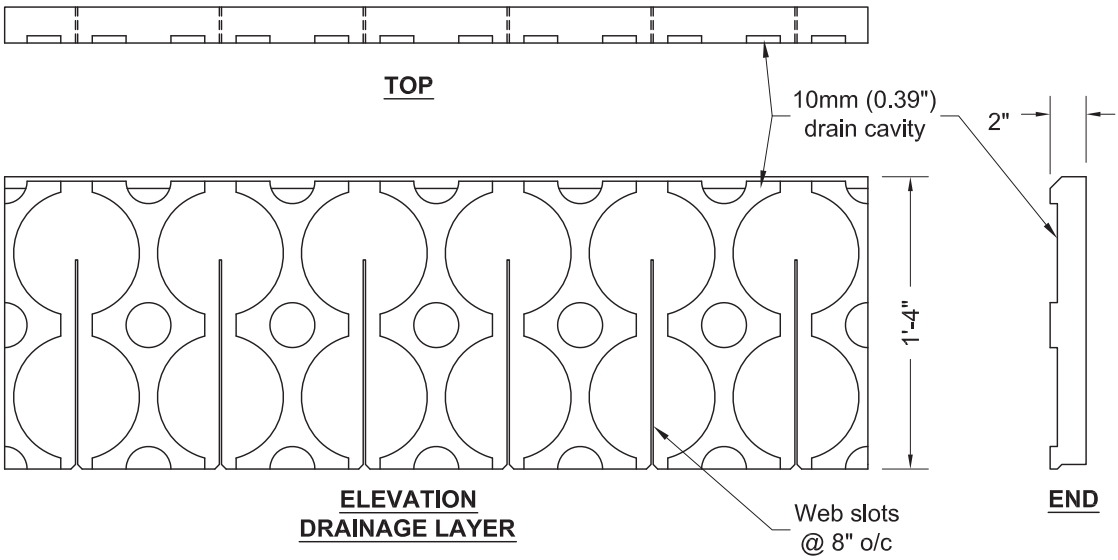

ELEVATION
DRAINAGE LAYER

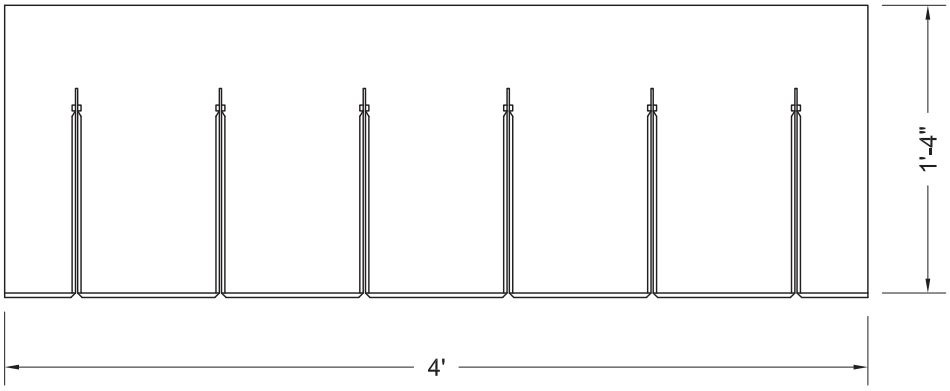

ELEVATION
OPPOSITE SIDE OF DRAINAGE LAYER



NOTES:
1. Dimensions shown are typical.

The tables and drawings represented herein are believed to be accurate and conforming to current design and construction practices. However, the tables and drawings should be used as a reference guide only. The user shall check to ensure the drawing meets local building codes, design and construction practices by consulting local building officials and professionals, including any additional requirements. Logix reserves the right to make changes to the tables and drawings without notice and assumes no liability in connection with the use of the tables and drawings including modification, copying or distribution.

5.1.24.1 - LOGIX D-Rv WITH 6.25” LOGIX 90° CORNER FORMS

All drawings are downloadable at www.logixicf.com

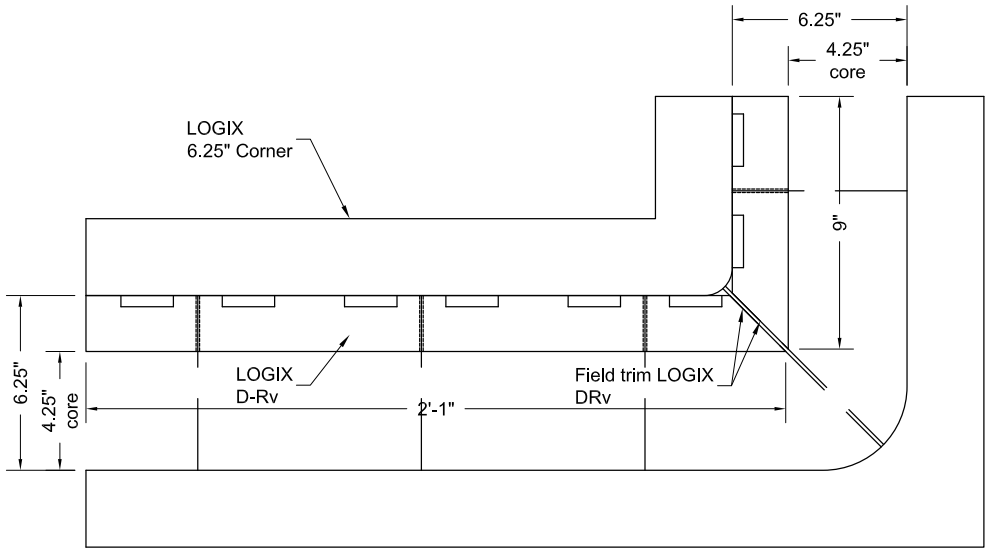

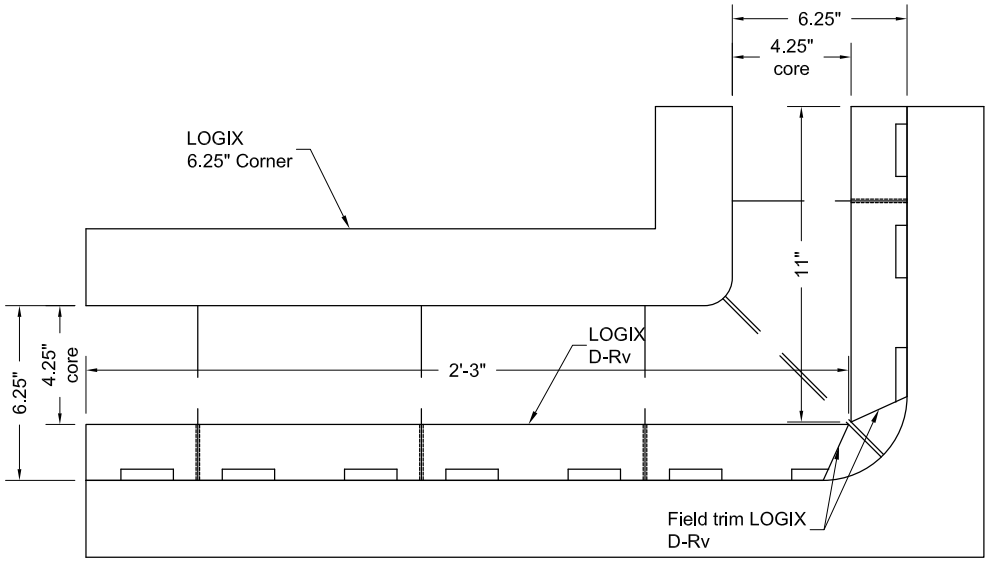

CAD DRAWINGS

The tables and drawings represented herein are believed to be accurate and conforming to current design and construction practices. However, the tables and drawings should be used as a reference guide only. The user shall check to ensure the drawing meets local building codes, design and construction practices by consulting local building officials and professionals, including any additional requirements. Logix reserves the right to make changes to the tables and drawings without notice and assumes no liability in connection with the use of the tables and drawings including modification, copying or distribution.

5.1.24.2 - LOGIX D-Rv WITH 8" LOGIX 90° CORNER FORMS

All drawings are downloadable at www.logixicf.com

CAD DRAWINGS

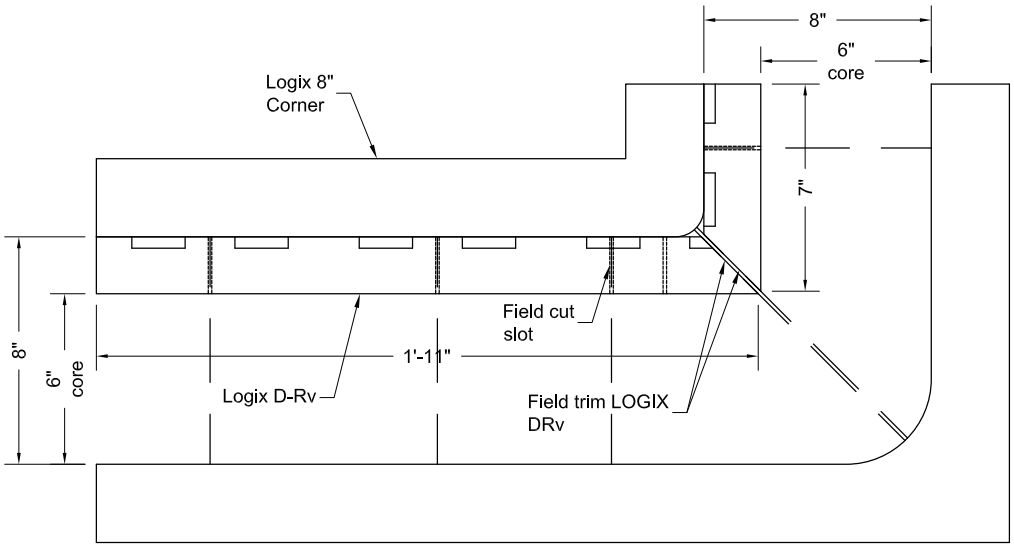

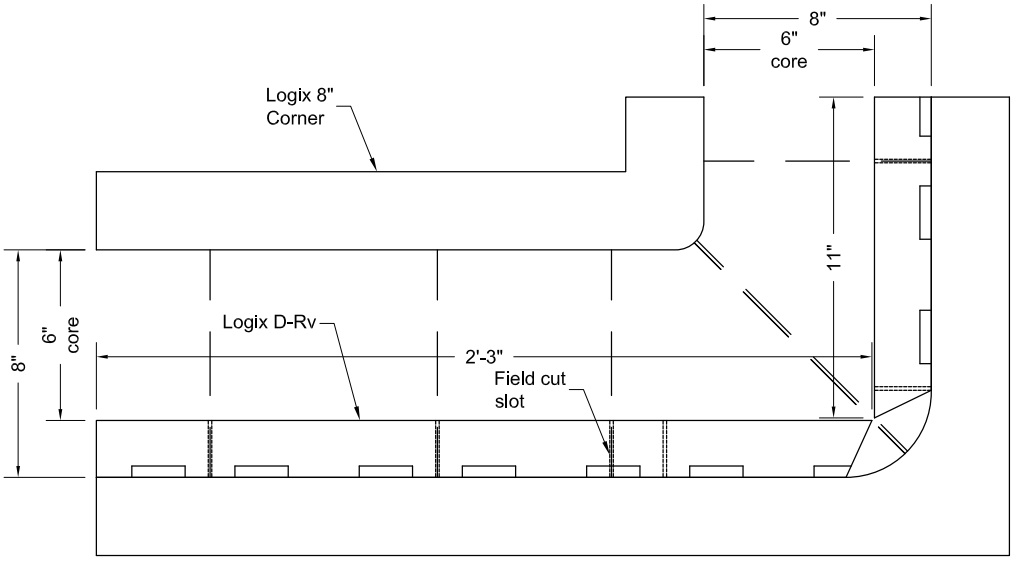

The tables and drawings represented herein are believed to be accurate and conforming to current design and construction practices. However, the tables and drawings should be used as a reference guide only. The user shall check to ensure the drawing meets local building codes, design and construction practices by consulting local building officials and professionals, including any additional requirements. Logix reserves the right to make changes to the tables and drawings without notice and assumes no liability in connection with the use of the tables and drawings including modification, copying or distribution.

5.1.24.3 - LOGIX D-Rv WITH 10" LOGIX 90° CORNER FORMS

All drawings are downloadable at www.logixicf.com

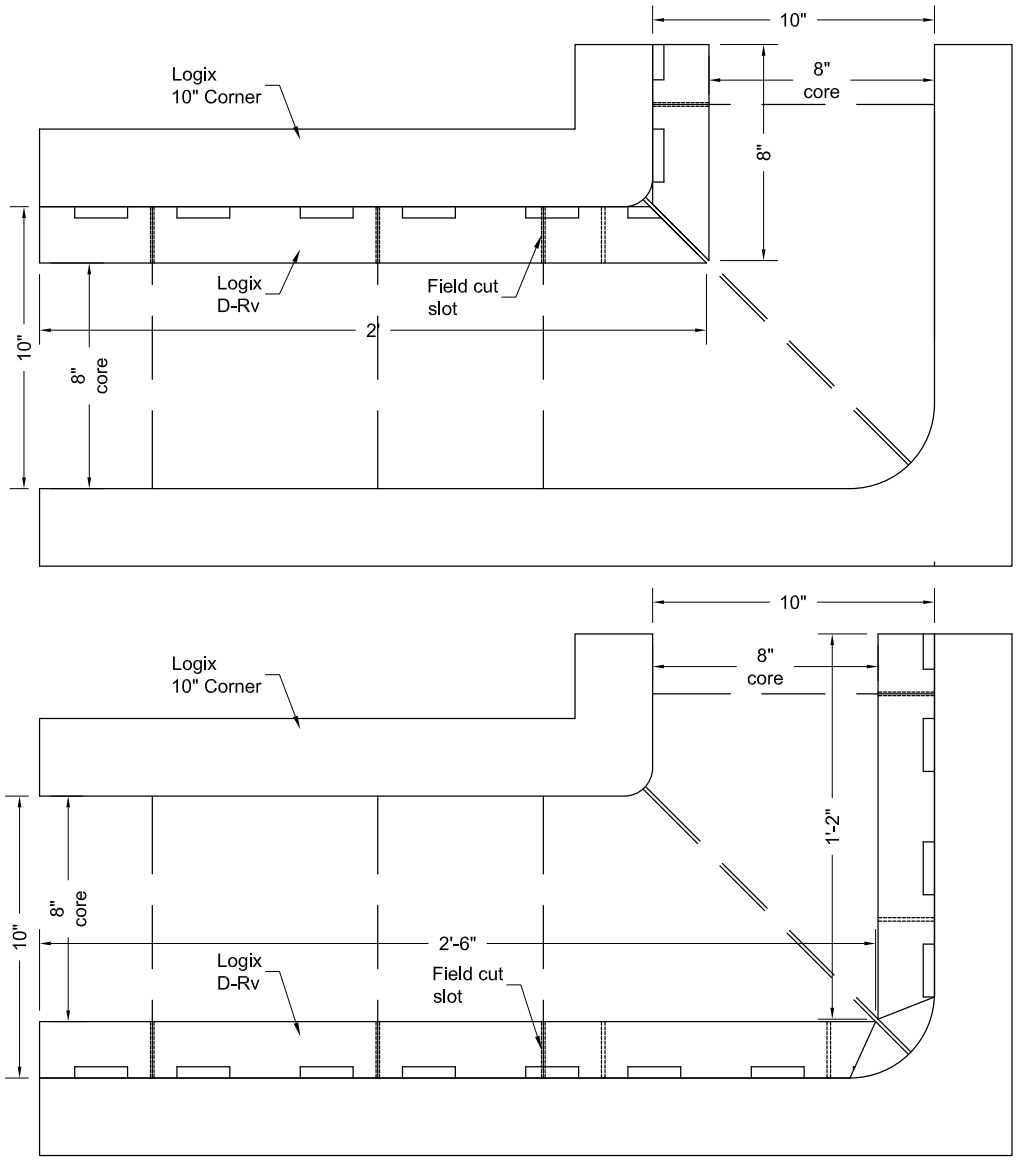

CAD DRAWINGS

The tables and drawings represented herein are believed to be accurate and conforming to current design and construction practices. However, the tables and drawings should be used as a reference guide only. The user shall check to ensure the drawing meets local building codes, design and construction practices by consulting local building officials and professionals, including any additional requirements. Logix reserves the right to make changes to the tables and drawings without notice and assumes no liability in connection with the use of the tables and drawings including modification, copying or distribution.

5.1.24.4 - LOGIX D-Rv WITH 12” LOGIX 90° CORNER FORMS

All drawings are downloadable at www.logixicf.com

CAD DRAWINGS

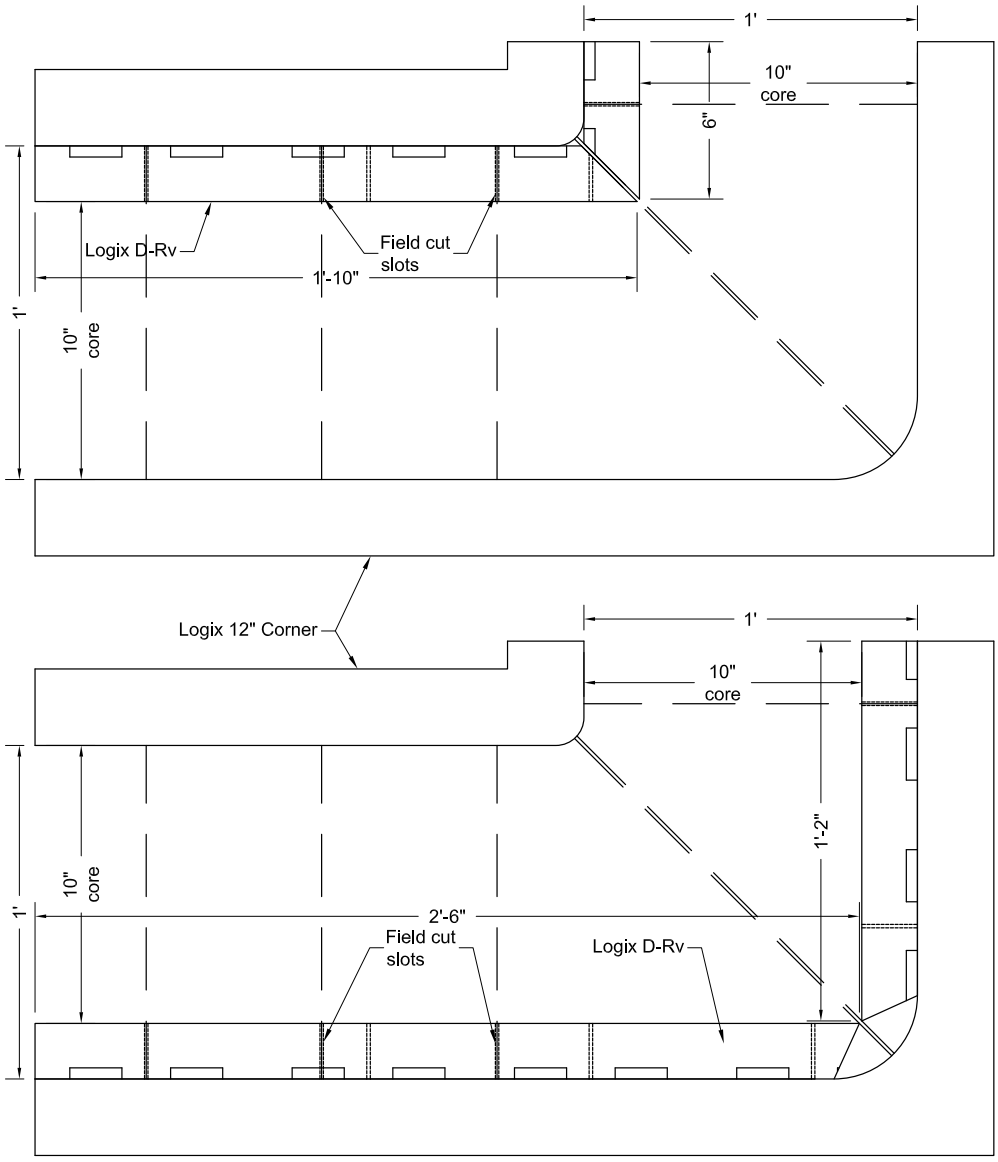

The tables and drawings represented herein are believed to be accurate and conforming to current design and construction practices. However, the tables and drawings should be used as a reference guide only. The user shall check to ensure the drawing meets local building codes, design and construction practices by consulting local building officials and professionals, including any additional requirements. Logix reserves the right to make changes to the tables and drawings without notice and assumes no liability in connection with the use of the tables and drawings including modification, copying or distribution.

5.1.24.5 - LOGIX D-Rv WITH 6.25" LOGIX 45° CORNER FORMS

All drawings are downloadable at www.logixicf.com

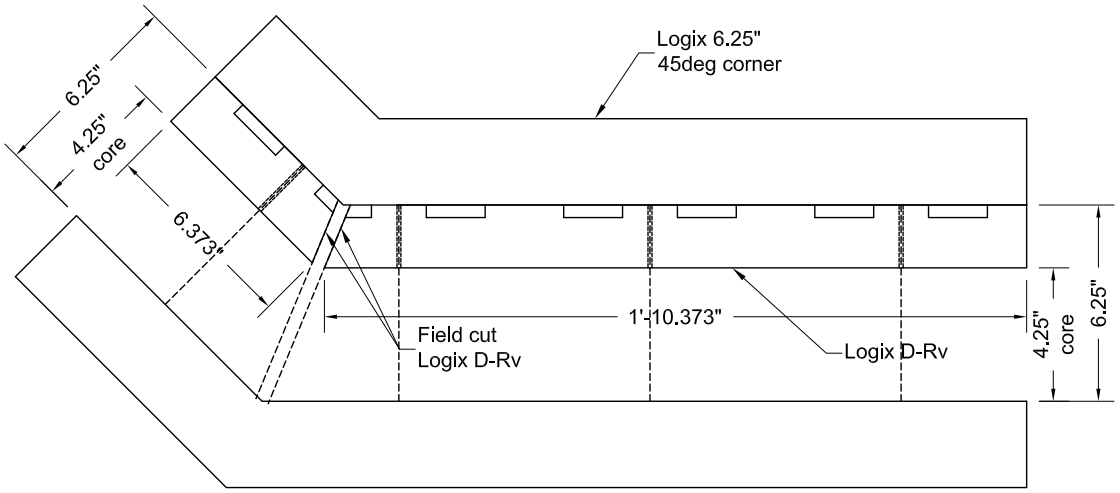

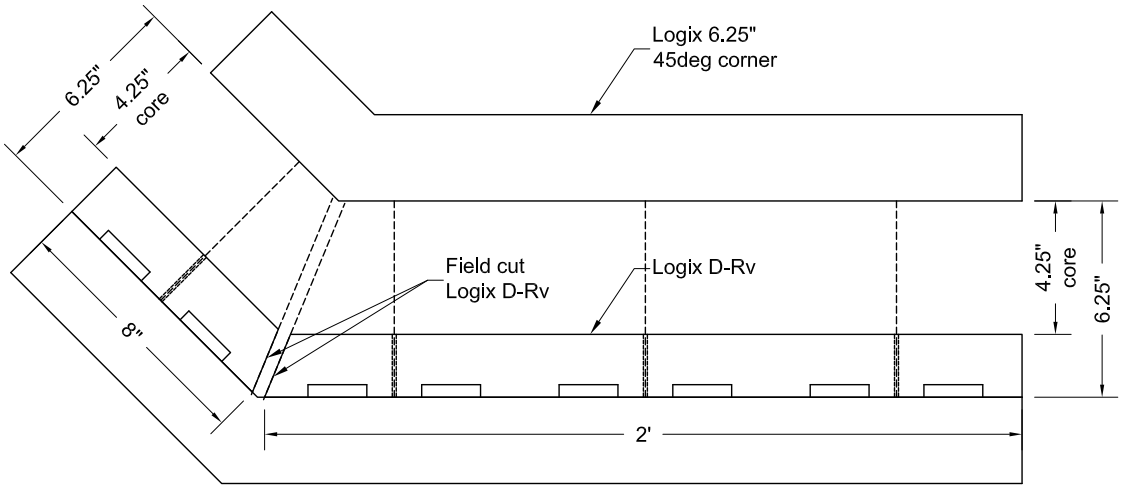

CAD DRAWINGS

The tables and drawings represented herein are believed to be accurate and conforming to current design and construction practices. However, the tables and drawings should be used as a reference guide only. The user shall check to ensure the drawing meets local building codes, design and construction practices by consulting local building officials and professionals, including any additional requirements. Logix reserves the right to make changes to the tables and drawings without notice and assumes no liability in connection with the use of the tables and drawings including modification, copying or distribution.

5.1.24.6 - LOGIX D-Rv WITH 8" LOGIX 45° CORNER FORMS

All drawings are downloadable at www.logixicf.com

CAD DRAWINGS

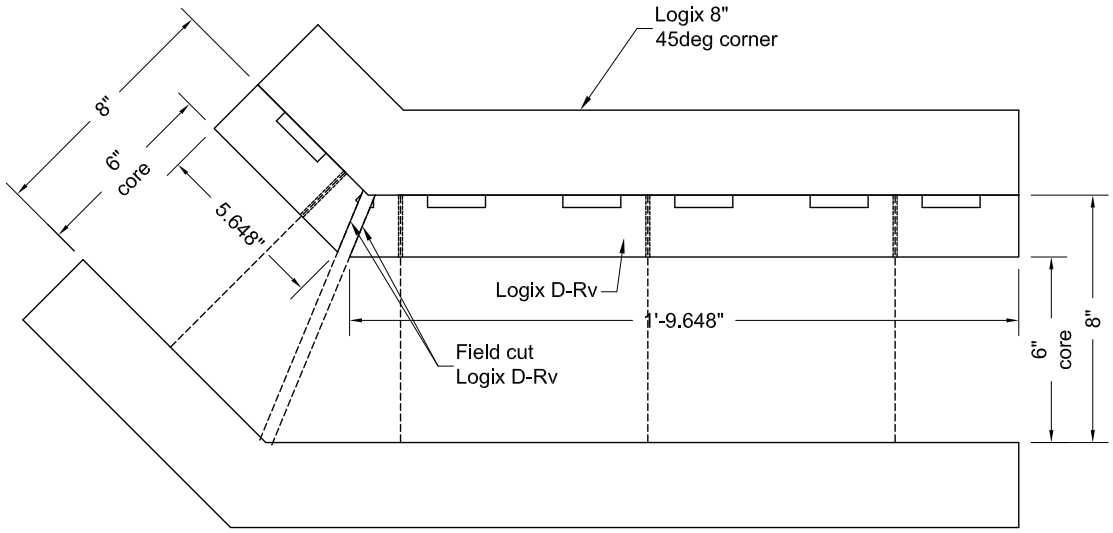

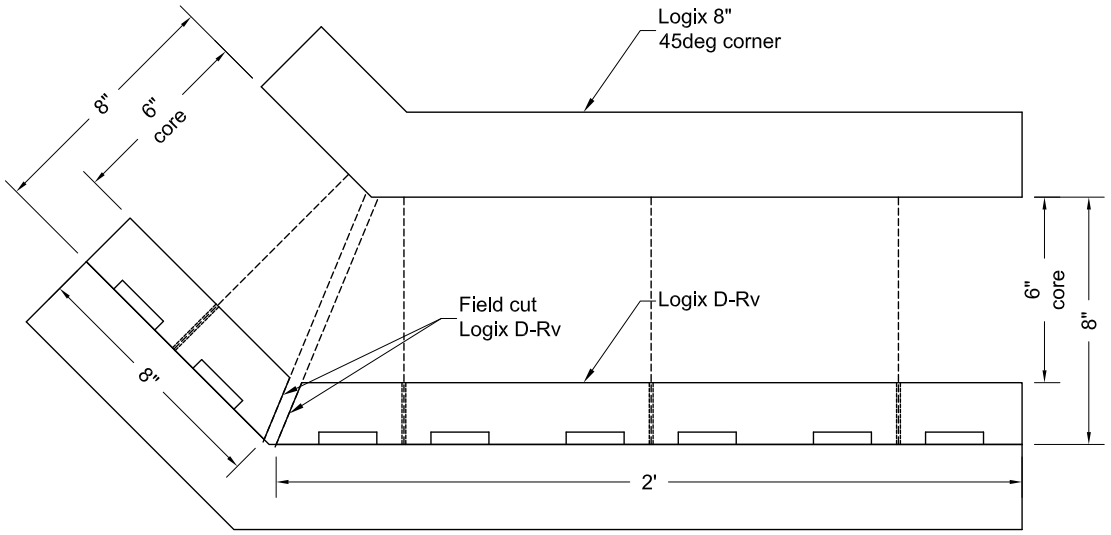

The tables and drawings represented herein are believed to be accurate and conforming to current design and construction practices. However, the tables and drawings should be used as a reference guide only. The user shall check to ensure the drawing meets local building codes, design and construction practices by consulting local building officials and professionals, including any additional requirements. Logix reserves the right to make changes to the tables and drawings without notice and assumes no liability in connection with the use of the tables and drawings including modification, copying or distribution.

Reprinted 2017

Rev. Dec 23/13

5.1.26 - LOGIX PRO BUCK

All drawings are downloadable at www.logixicf.com

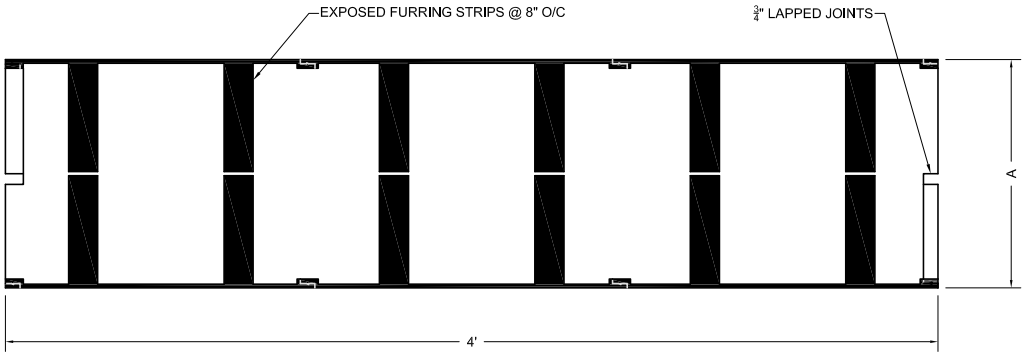

TOP VIEW

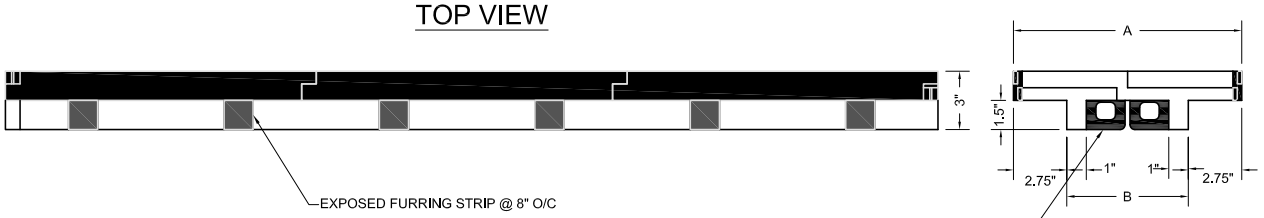

SIDE VIEW

END VIEW

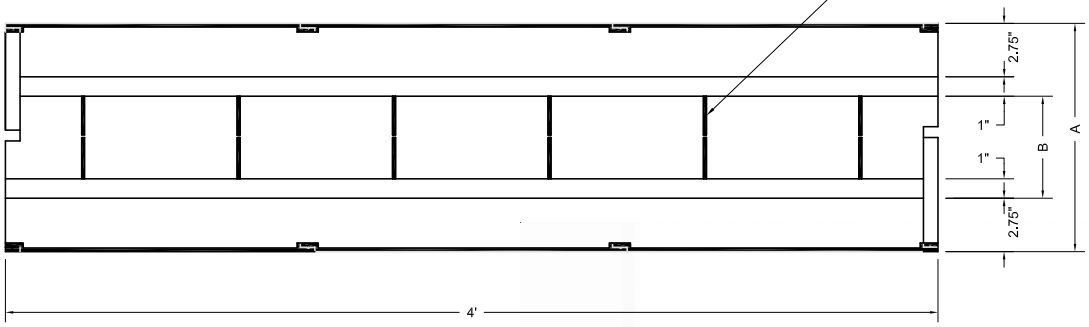

BOTTOM VIEW

AVAILABLE LOGIX PRO BUCK SIZES		
	A	B
LOGIX 6.25" ICF	11.75"	6.25"
LOGIX 8" ICF	13.5"	8"



CAD DRAWINGS

The tables and drawings represented herein are believed to be accurate and conforming to current design and construction practices. However, the tables and drawings should be used as a reference guide only. The user shall check to ensure the drawing meets local building codes, design and construction practices by consulting local building officials and professionals, including any additional requirements. Logix reserves the right to make changes to the tables and drawings without notice and assumes no liability in connection with the use of the tables and drawings including modification, copying or distribution.

5.1.27 - HEAT-SHEET RADIANT FLOOR INSULATION

All drawings are downloadable at www.logixicf.com

CAD DRAWINGS

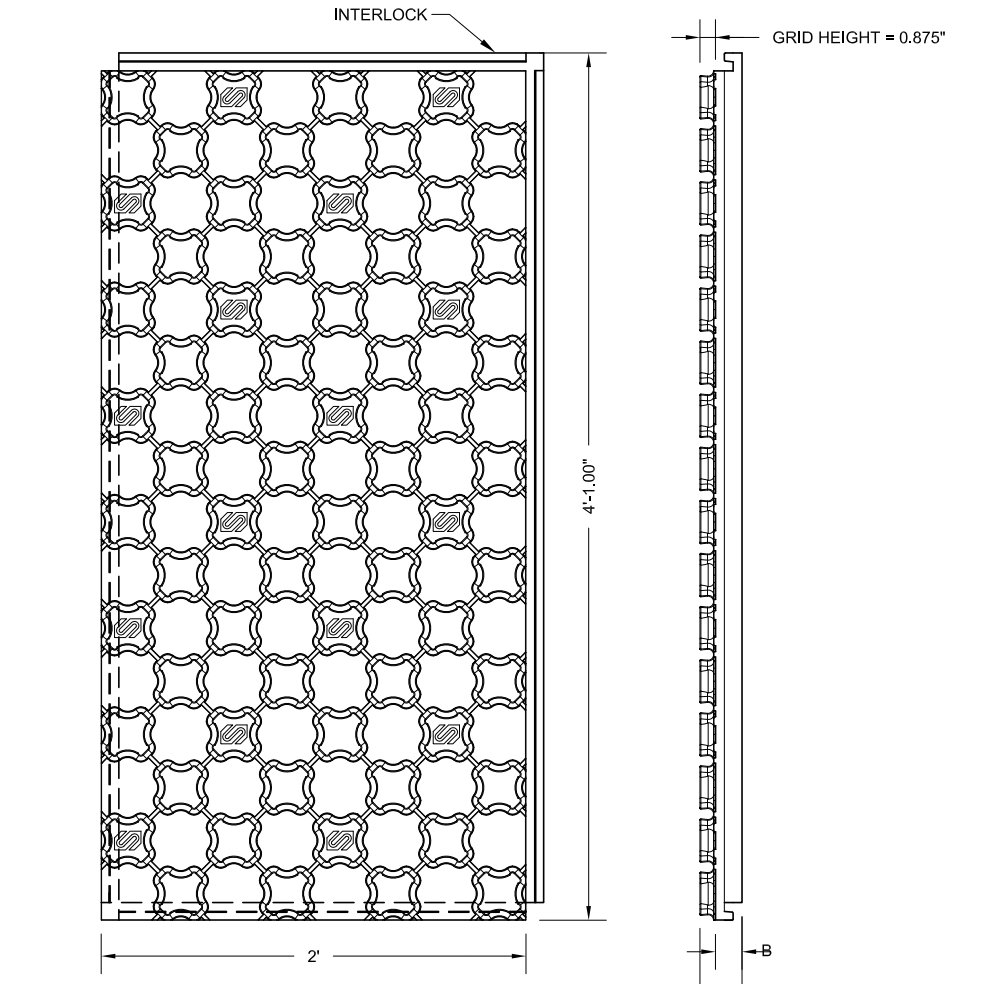

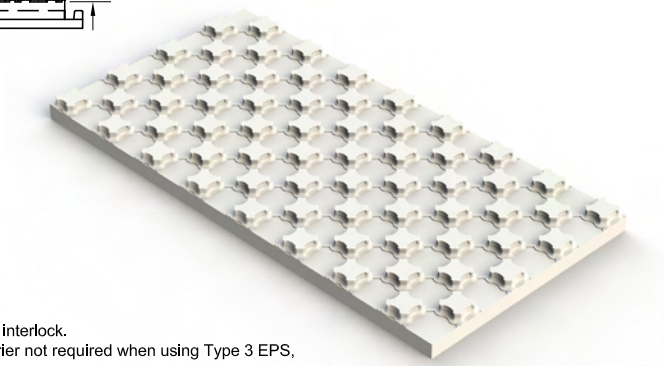

HEAT-SHEET SIZES		
PRODUCT	TTL PANEL THICKNESS	AVG R-VALUE
HS-R4[1]	1⅜"	4
HS-R6[1,4]	1⅞"	6
HS-R8	2⅜"	8
HS-R10[2,4]	2⅞"	10
HS-R12[2,3,4]	3⅜"	12
HS-14[2,3]	3⅞"	14
HSH-R10[2]	3.2"	10

1. These panels do not interlock.
2. Additional vapor barrier not required when using Type 3 EPS, per CAN/ULC S701.
3. Additional vapor barrier not required when using Type IX EPS.
4. Visit Heat-Sheet.com for more information on Heat-Sheet radiant floor insulation.

The tables and drawings represented herein are believed to be accurate and conforming to current design and construction practices. However, the tables and drawings should be used as a reference guide only. The user shall check to ensure the drawing meets local building codes, design and construction practices by consulting local building officials and professionals, including any additional requirements. Logix reserves the right to make changes to the tables and drawings without notice and assumes no liability in connection with the use of the tables and drawings including modification, copying or distribution.

Reprinted 2017

Rev. Dec 23/13

5.1.28 - HEAT-SHEET HEAVY RADIANT FLOOR INSULATION

All drawings are downloadable at www.logixicf.com

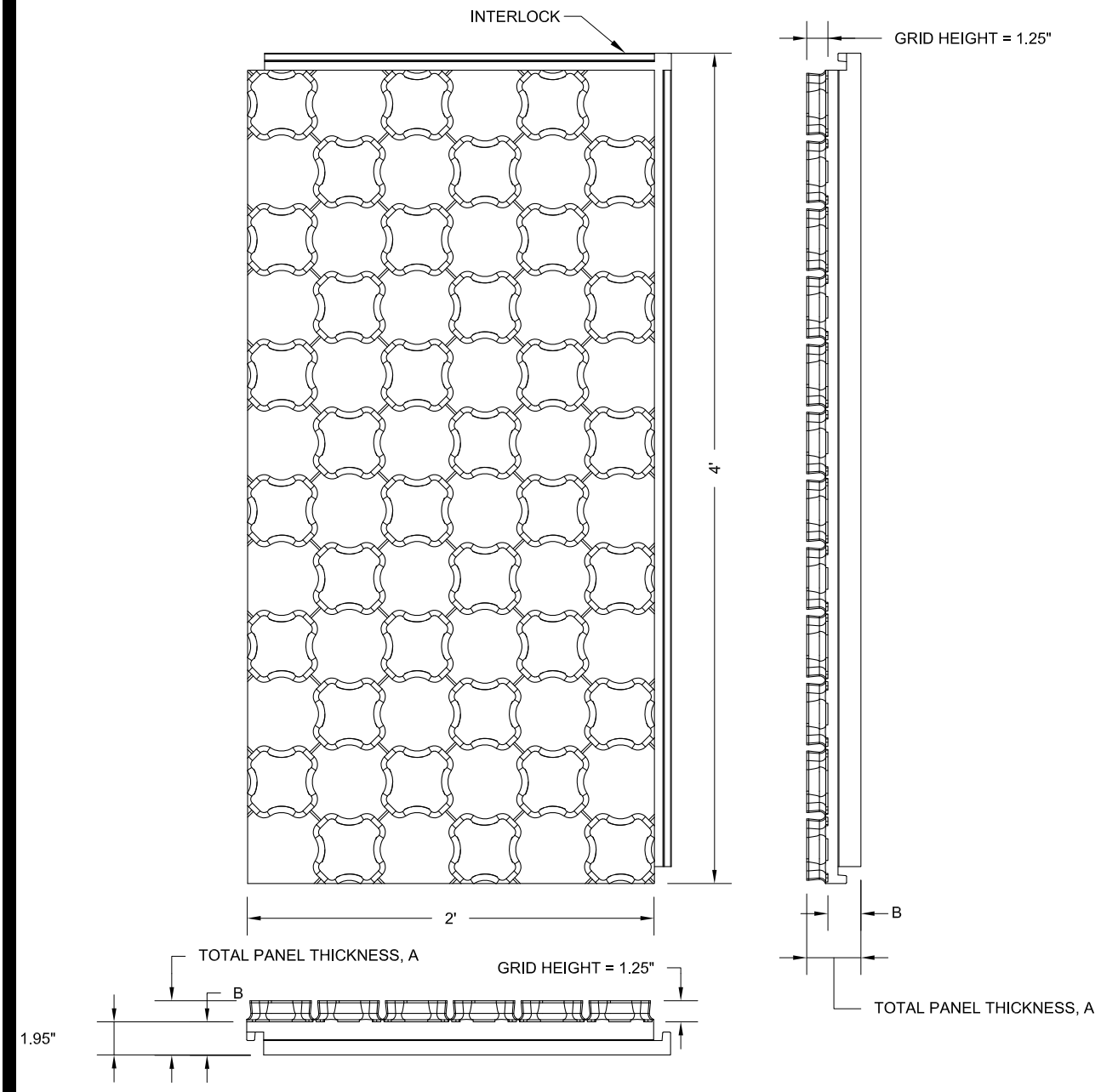

HEAT-SHEET SIZES		
PRODUCT	**TTL PANEL THICKNESS**	**AVG R-VALUE**
HSH-R10[1]	3.2"	10

1. Additional vapor barrier not required when using Type 3 EPS, per CAN/ULC S701.
2. Visit Heat-Sheet.com for more information on Heat-Sheet radiant floor insulation.

The tables and drawings represented herein are believed to be accurate and conforming to current design and construction practices. However, the tables and drawings should be used as a reference guide only. The user shall check to ensure the drawing meets local building codes, design and construction practices by consulting local building officials and professionals, including any additional requirements. Logix reserves the right to make changes to the tables and drawings without notice and assumes no liability in connection with the use of the tables and drawings including modification, copying or distribution.

5.1.29 - HEAT-SHEET UNDER SLAB APPLICATION

All drawings are downloadable at www.logixicf.com

C A D D R A W I N G S

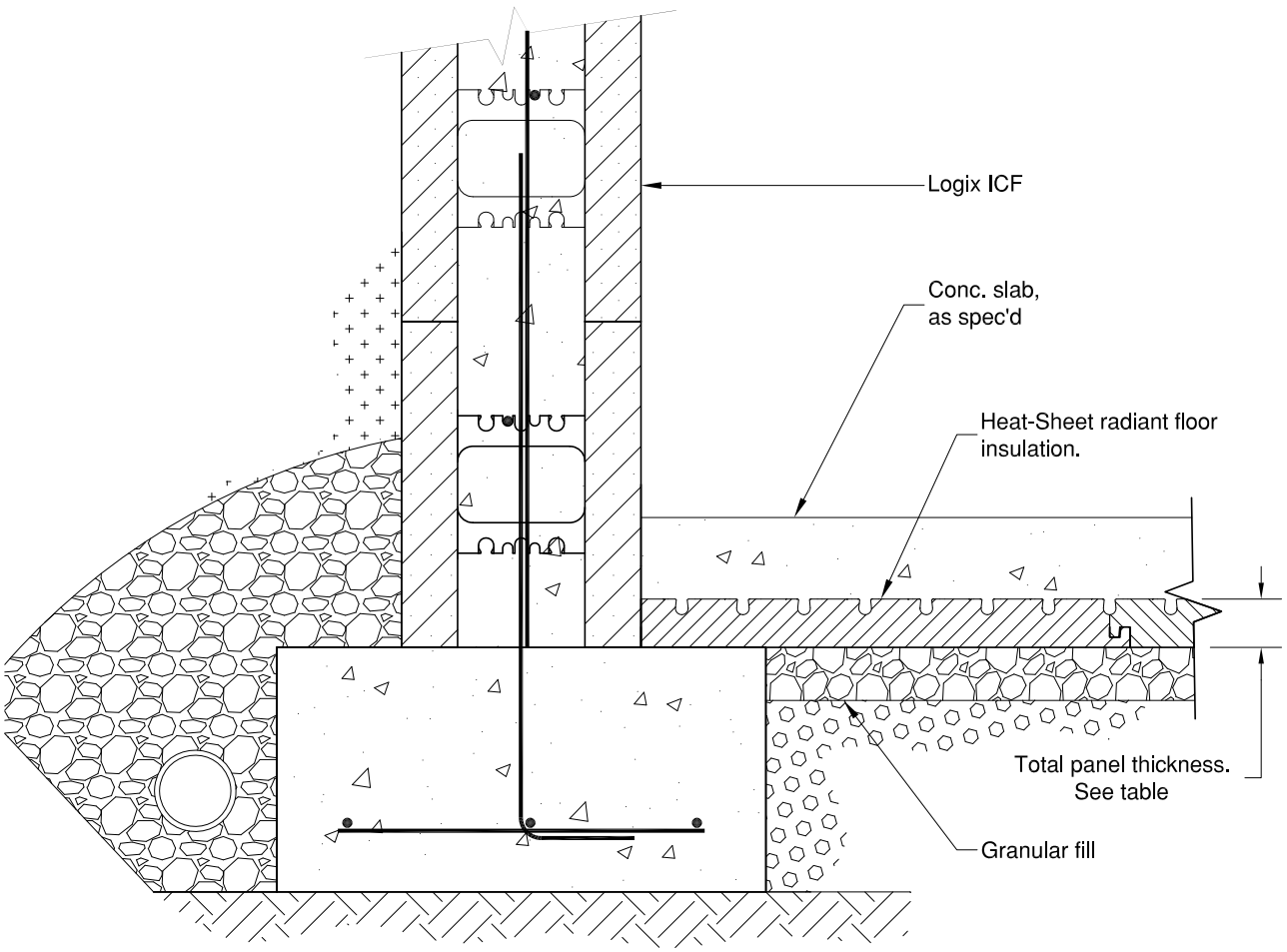

HEAT-SHEET SIZES		
PRODUCT	TTL PANEL THICKNESS	AVG R-VALUE
HS-R4[1]	1⅜"	4
HS-R6[1,4]	1⅞"	6
HS-R8	2⅜"	8
HS-R10[2,4]	2⅞"	10
HS-R12[2,3,4]	3⅜"	12
HS-14[2,3]	3⅞"	14
HSH-R10[2]	3.2"	10

1. These panels do not interlock.
2. Additional vapor barrier not required when using Type 3 EPS, per CAN/ULC S701.
3. Additional vapor barrier not required when using Type IX EPS.
4. Visit Heat-Sheet.com for more information on Heat-Sheet radiant floor insulation.

The tables and drawings represented herein are believed to be accurate and conforming to current design and construction practices. However, the tables and drawings should be used as a reference guide only. The user shall check to ensure the drawing meets local building codes, design and construction practices by consulting local building officials and professionals, including any additional requirements. Logix reserves the right to make changes to the tables and drawings without notice and assumes no liability in connection with the use of the tables and drawings including modification, copying or distribution.

Reprinted 2017

Rev. Dec 8/15

5.2 - GENERAL DETAILS
5.2.1 - REINFORCING

5.2.1 - REINFORCING
5.2.1.1 - CORNER WALL REINFORCING

All drawings are downloadable at www.logixicf.com

CAD DRAWINGS

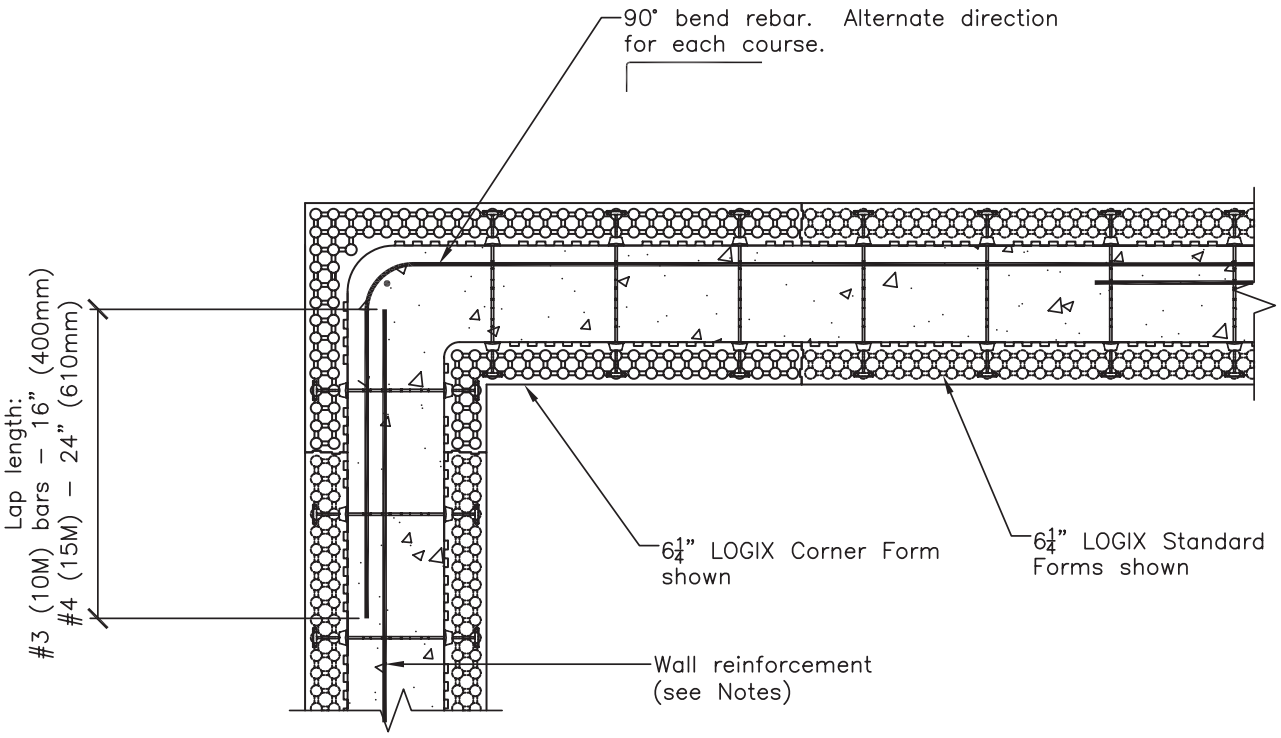

NOTES:
See Section 6 – Engineering in the LOGIX Product Manual for reinforcement details.

The tables and drawings represented herein are believed to be accurate and conforming to current design and construction practices. However, the tables and drawings should be used as a reference guide only. The user shall check to ensure the drawing meets local building codes, design and construction practices by consulting local building officials and professionals, including any additional requirements. Logix reserves the right to make changes to the tables and drawings without notice and assumes no liability in connection with the use of the tables and drawings including modification, copying or distribution.

5.2.1.2 - CORNER REINFORCING WITH BRICK LEDGE FORMS

All drawings are downloadable at www.logixicf.com

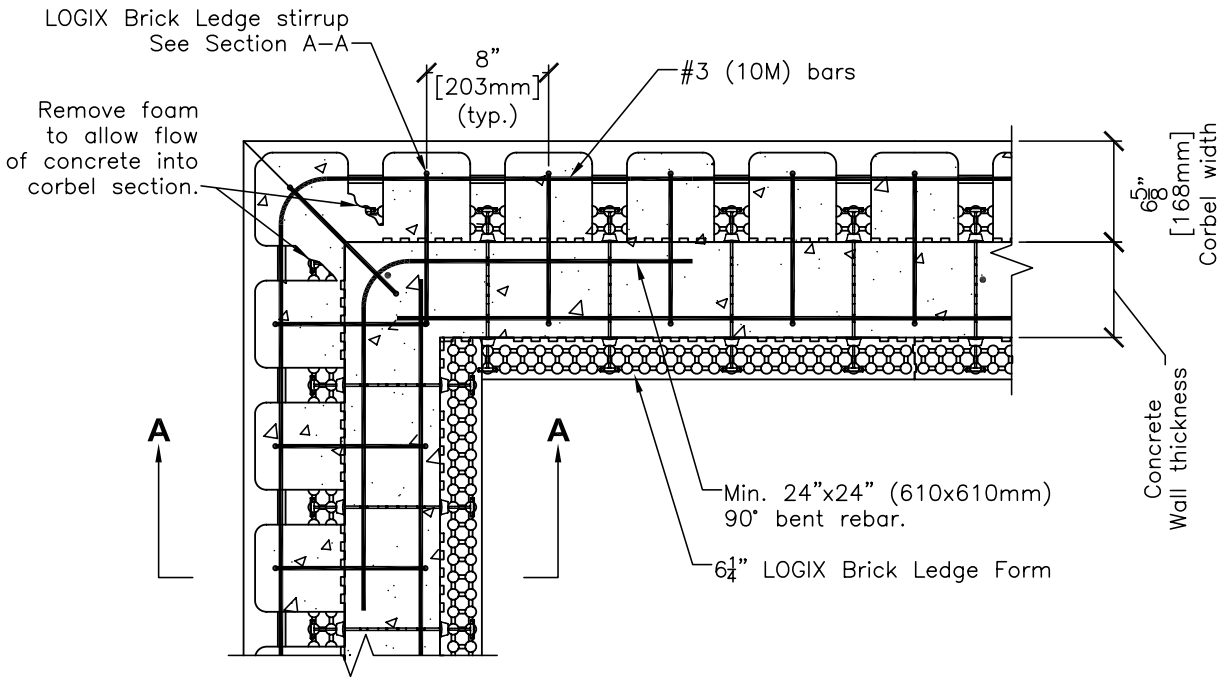

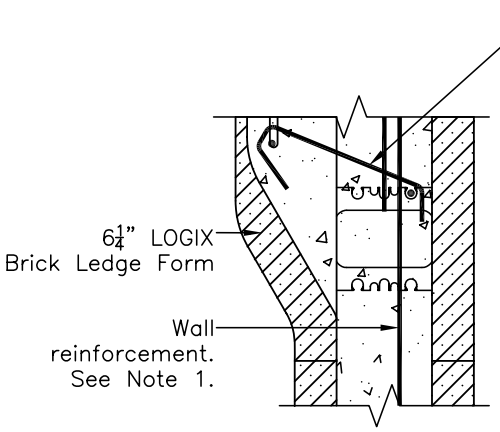

SECTION A-A

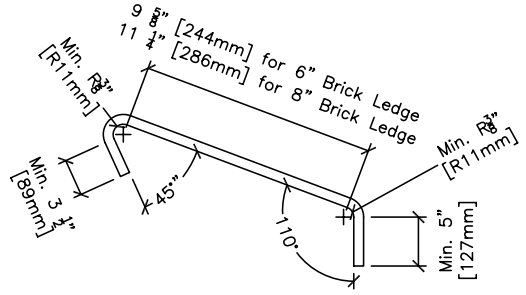

STIRRUP DETAIL
(See Note 2)

NOTES:

1. See Section 6 – Engineering in the LOGIX Product Manual for reinforcement details.
2. Stirrup shown is rated for 1300lbs/ft (19kN/m). For heavier load conditions and stirrup dimensions see Brick Ledge Stirrup details drawings.

The tables and drawings represented herein are believed to be accurate and conforming to current design and construction practices. However, the tables and drawings should be used as a reference guide only. The user shall check to ensure the drawing meets local building codes, design and construction practices by consulting local building officials and professionals, including any additional requirements. Logix reserves the right to make changes to the tables and drawings without notice and assumes no liability in connection with the use of the tables and drawings including modification, copying or distribution.

CAD DRAWINGS

5.2.1.4 - T-WALL REINFORCING

All drawings are downloadable at www.logixicf.com

CAD DRAWINGS

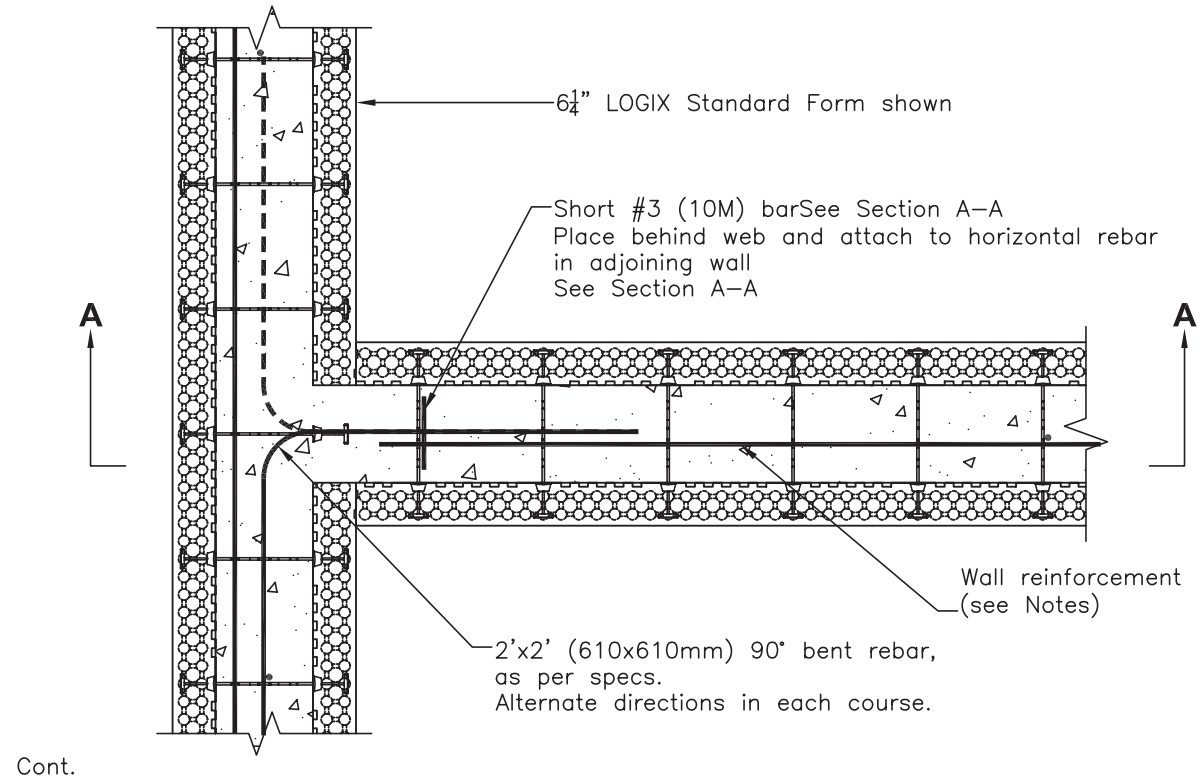

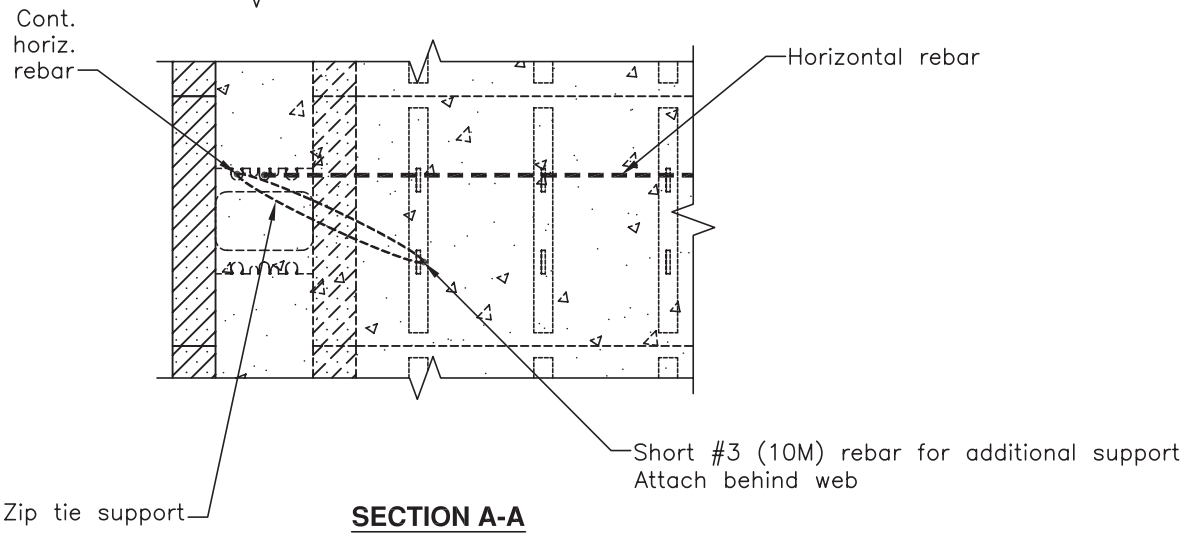

SECTION A-A

NOTES:
See Section 6 – Engineering in the LOGIX Product Manual for reinforcement details.

The tables and drawings represented herein are believed to be accurate and conforming to current design and construction practices. However, the tables and drawings should be used as a reference guide only. The user shall check to ensure the drawing meets local building codes, design and construction practices by consulting local building officials and professionals, including any additional requirements. Logix reserves the right to make changes to the tables and drawings without notice and assumes no liability in connection with the use of the tables and drawings including modification, copying or distribution.

5.2.1.5 - TYPICAL REINFORCEMENT AROUND OPENINGS

All drawings are downloadable at www.logixicf.com

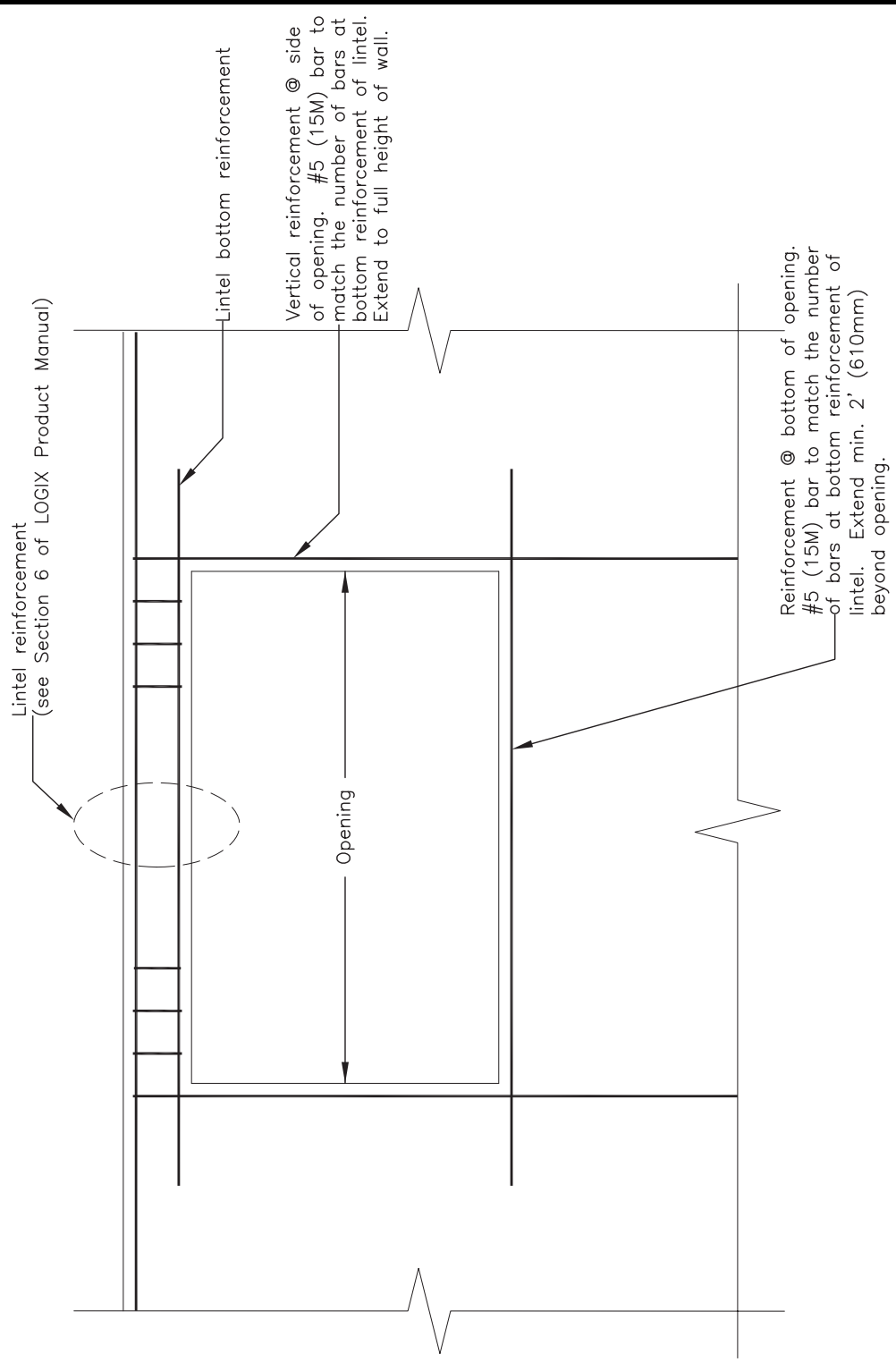

CAD DRAWINGS

The tables and drawings represented herein are believed to be accurate and conforming to current design and construction practices. However, the tables and drawings should be used as a reference guide only. The user shall check to ensure the drawing meets local building codes, design and construction practices by consulting local building officials and professionals, including any additional requirements. Logix reserves the right to make changes to the tables and drawings without notice and assumes no liability in connection with the use of the tables and drawings including modification, copying or distribution.

5.2.1.6 / 5.2.1.7 - BRICK LEDGE STANDARD REINFORCEMENT / BRICK LEDGE HEAVY REINFORCEMENT

All drawings are downloadable at www.logixicf.com

CAD DRAWINGS

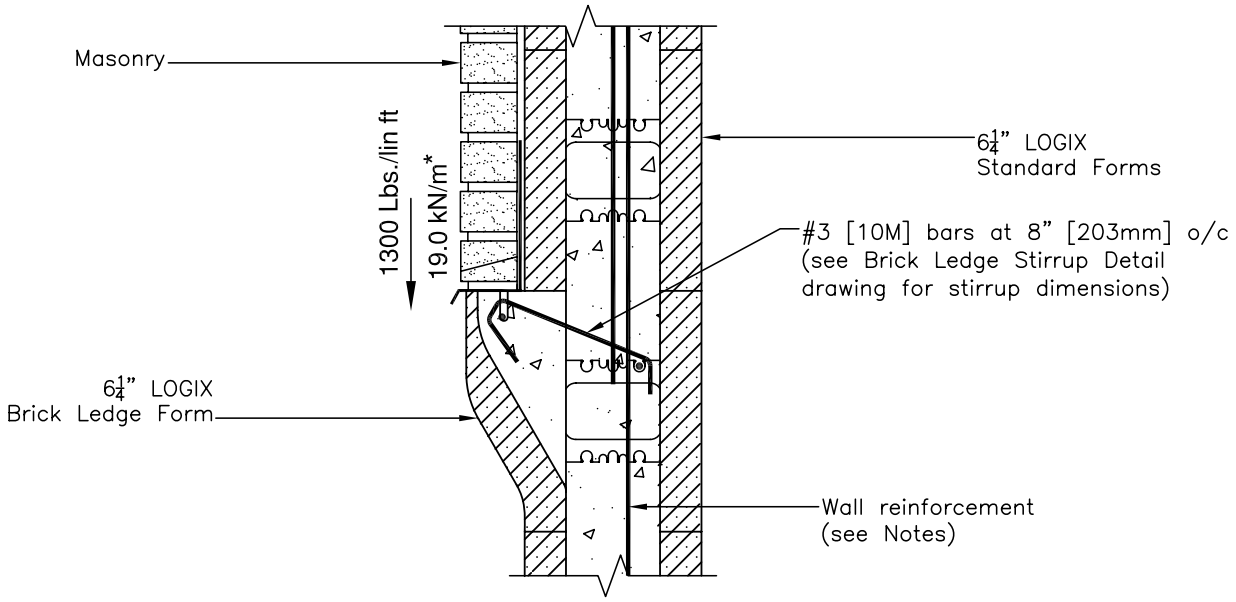

5.10.5 - BRICK LEDGE STANDARD REINFORCEMENT

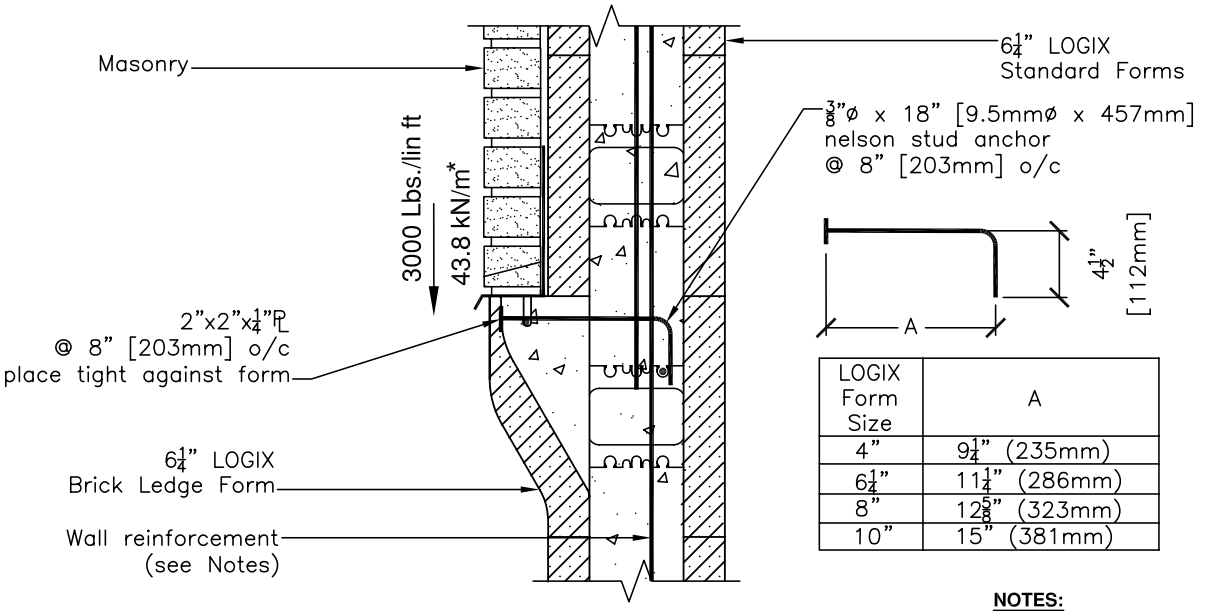

LOGIX Form Size	A
4"	9¼" (235mm)
6¼"	11¼" (286mm)
8"	12⅝" (323mm)
10"	15" (381mm)

5.10.6 - BRICK LEDGE HEAVY REINFORCEMENT

NOTES:
See Section 6 – Engineering in the LOGIX Product Manual for reinforcement details.

*1kN = 224.8lb

The tables and drawings represented herein are believed to be accurate and conforming to current design and construction practices. However, the tables and drawings should be used as a reference guide only. The user shall check to ensure the drawing meets local building codes, design and construction practices by consulting local building officials and professionals, including any additional requirements. Logix reserves the right to make changes to the tables and drawings without notice and assumes no liability in connection with the use of the tables and drawings including modification, copying or distribution.

Reprinted 2017
Rev. Dec 23/13

5.2.1.8 - BRICK LEDGE STIRRUP DETAIL

All drawings are downloadable at www.logixicf.com

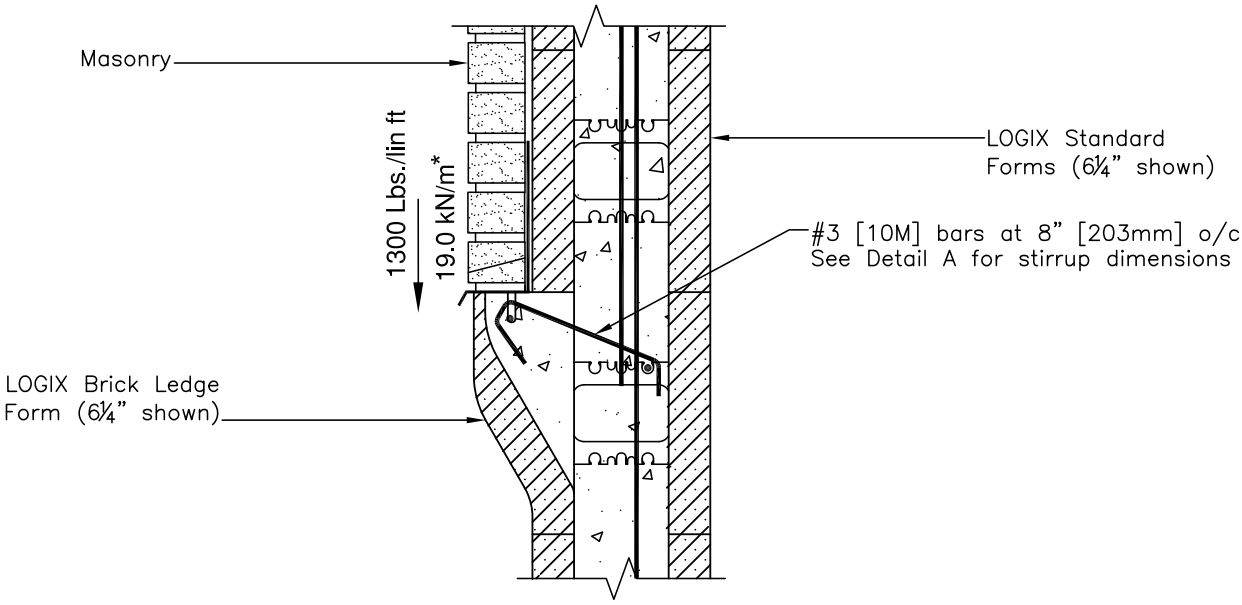

BRICK LEDGE STANDARD REINFORCEMENT

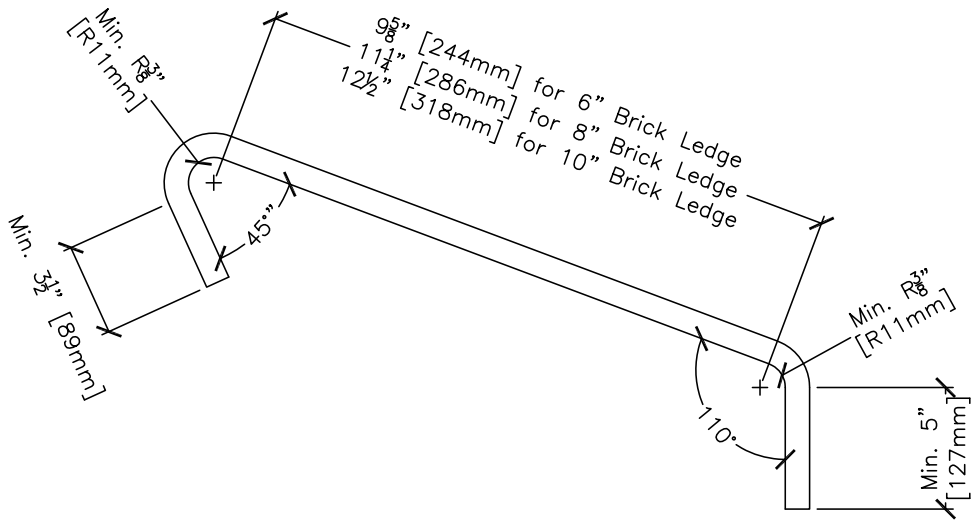

DETAIL A

NOTES:
See Section 6 – Engineering in the LOGIX Product Manual for reinforcement details.

*1kN = 224.8lb

The tables and drawings represented herein are believed to be accurate and conforming to current design and construction practices. However, the tables and drawings should be used as a reference guide only. The user shall check to ensure the drawing meets local building codes, design and construction practices by consulting local building officials and professionals, including any additional requirements. Logix reserves the right to make changes to the tables and drawings without notice and assumes no liability in connection with the use of the tables and drawings including modification, copying or distribution.

CAD DRAWINGS

5.2.2 - WALL CONNECTIONS

5.2.2 - WALL CONNECTIONS
5.2.2.1 - ATTACHING TO STUD FRAMED WALLS

All drawings are downloadable at www.logixicf.com

CAD DRAWINGS

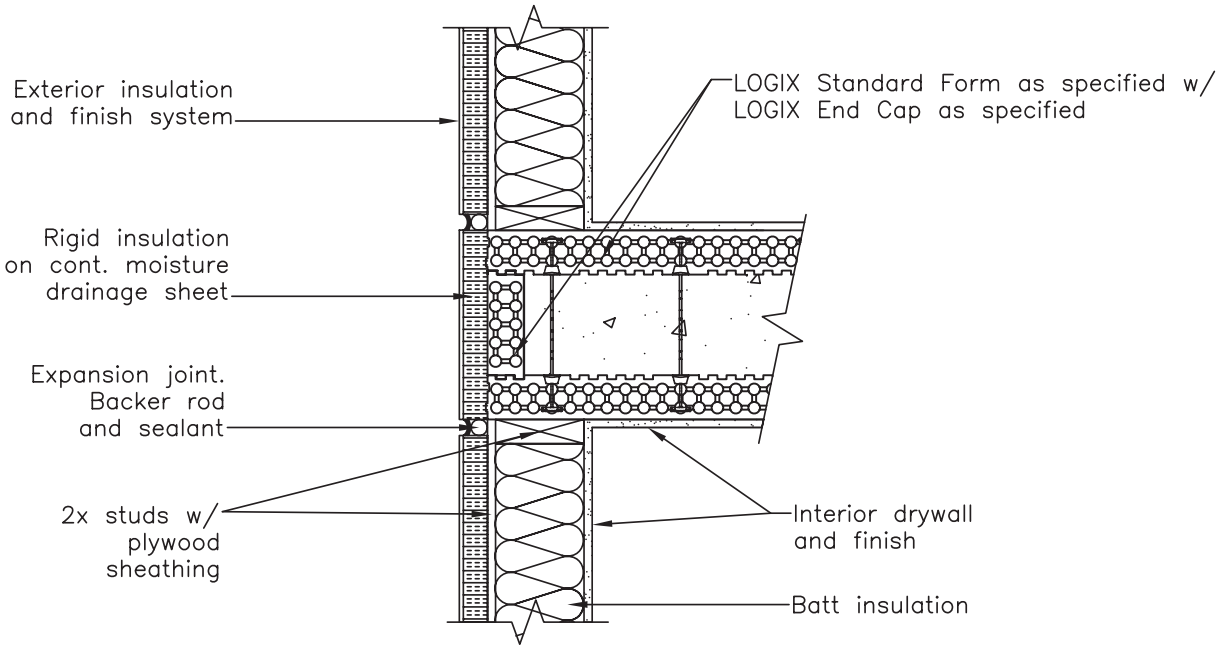

INTERIOR LOGIX WALL TO EXTERIOR STUD FRAMED WALLS

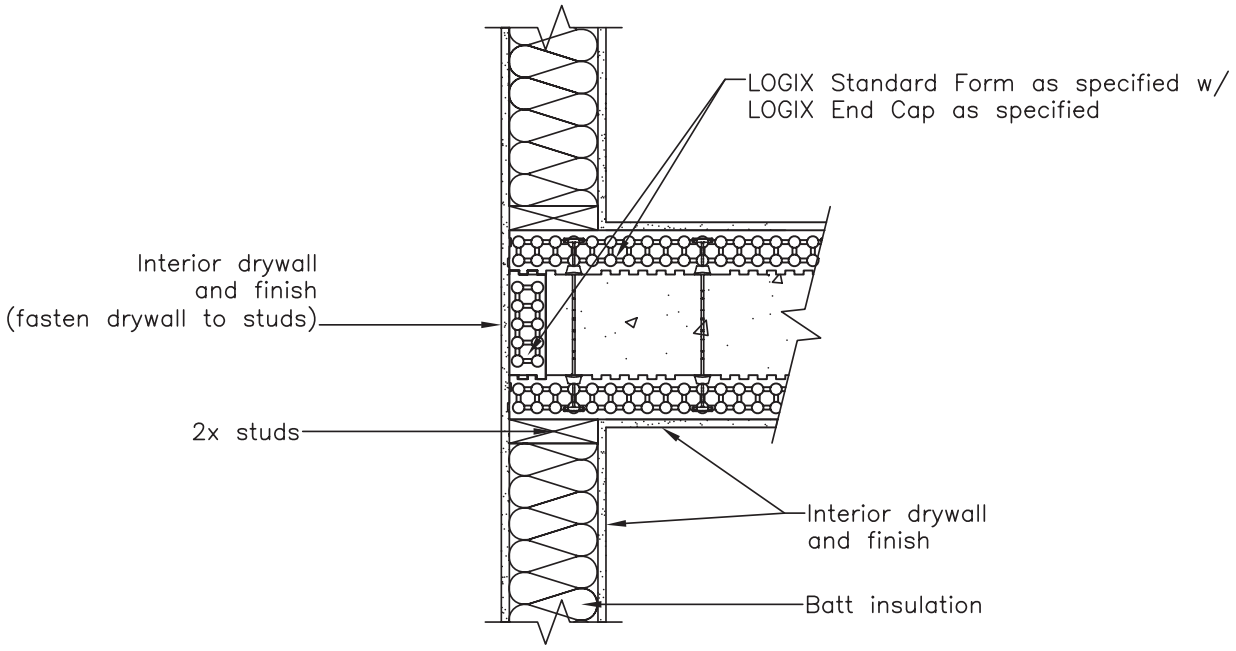

INTERIOR LOGIX WALL TO INTERIOR STUD FRAMED WALLS

The tables and drawings represented herein are believed to be accurate and conforming to current design and construction practices. However, the tables and drawings should be used as a reference guide only. The user shall check to ensure the drawing meets local building codes, design and construction practices by consulting local building officials and professionals, including any additional requirements. Logix reserves the right to make changes to the tables and drawings without notice and assumes no liability in connection with the use of the tables and drawings including modification, copying or distribution.

Reprinted 2017
Rev. Dec 23/13

5.2.2.2 - STUD WALL CLOSURE ATTACHMENT

All drawings are downloadable at www.logixicf.com

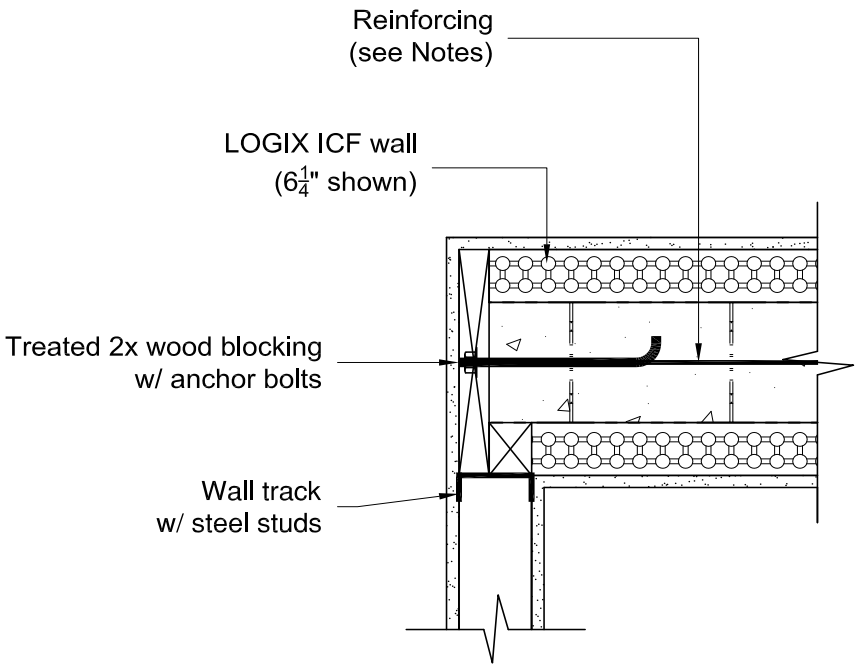

NOTES:

1. See Section 6 - Engineering in the LOGIX Design Manual for reinforcement details.

The tables and drawings represented herein are believed to be accurate and conforming to current design and construction practices. However, the tables and drawings should be used as a reference guide only. The user shall check to ensure the drawing meets local building codes, design and construction practices by consulting local building officials and professionals, including any additional requirements. Logix reserves the right to make changes to the tables and drawings without notice and assumes no liability in connection with the use of the tables and drawings including modification, copying or distribution.

5.2.2.3 - 1 HR FIRE RATED WALL DETAIL AT PARTITION/ICF WALL JOINT

All drawings are downloadable at www.logixicf.com

CAD DRAWINGS

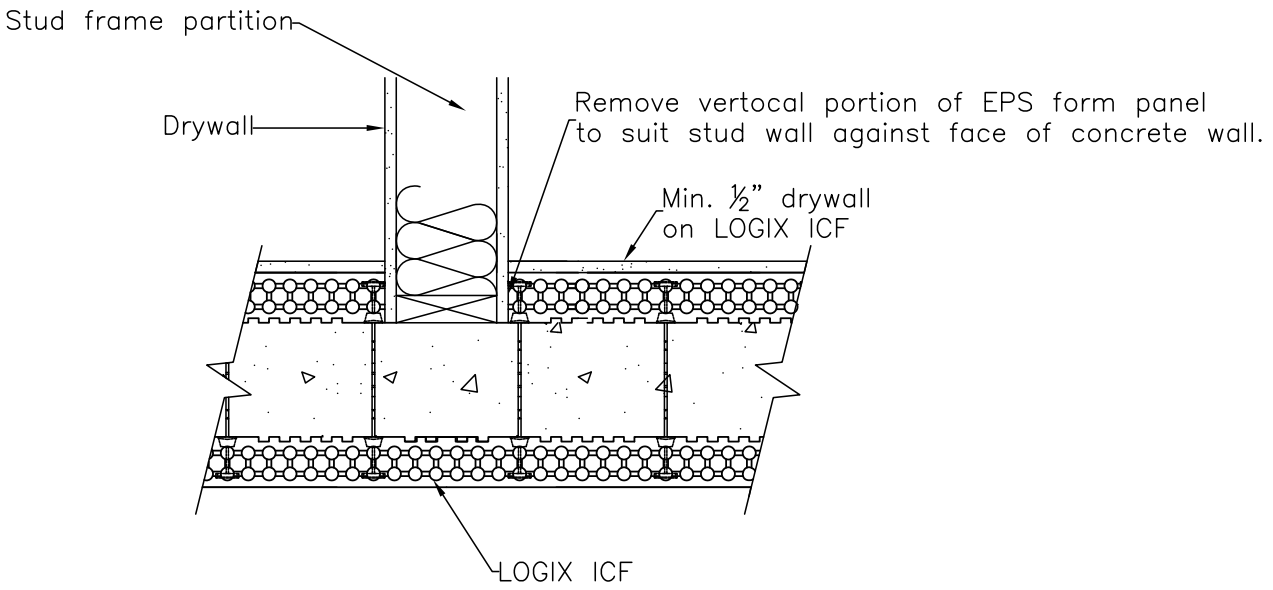

STUD WALL INSET OF LOGIX

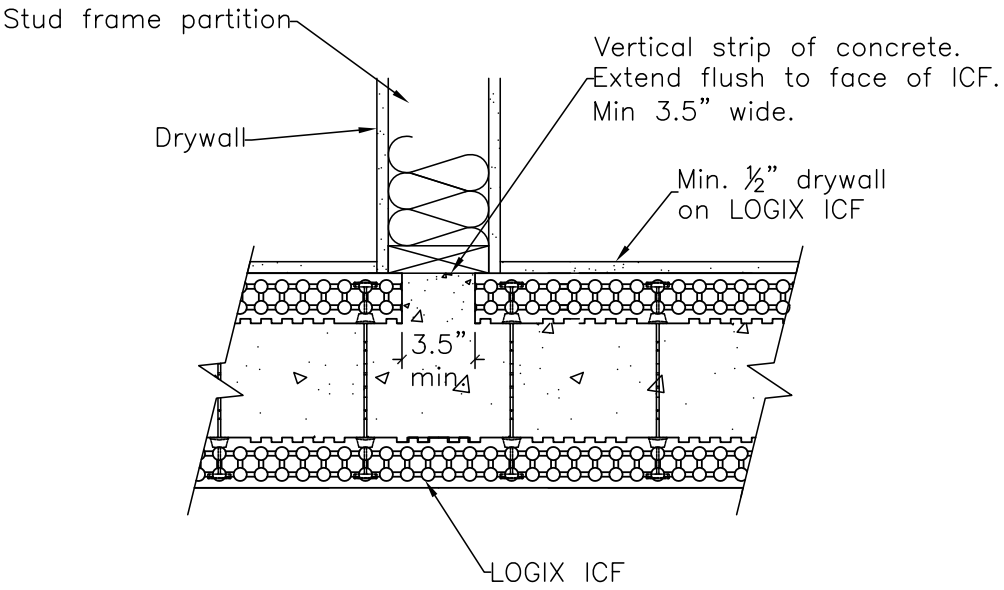

STUD WALL FLUSH TO ICF

The tables and drawings represented herein are believed to be accurate and conforming to current design and construction practices. However, the tables and drawings should be used as a reference guide only. The user shall check to ensure the drawing meets local building codes, design and construction practices by consulting local building officials and professionals, including any additional requirements. Logix reserves the right to make changes to the tables and drawings without notice and assumes no liability in connection with the use of the tables and drawings including modification, copying or distribution.

5.2.2.4 - ANGLED STUD FRAMED WALL ATTACHMENT

All drawings are downloadable at www.logixicf.com

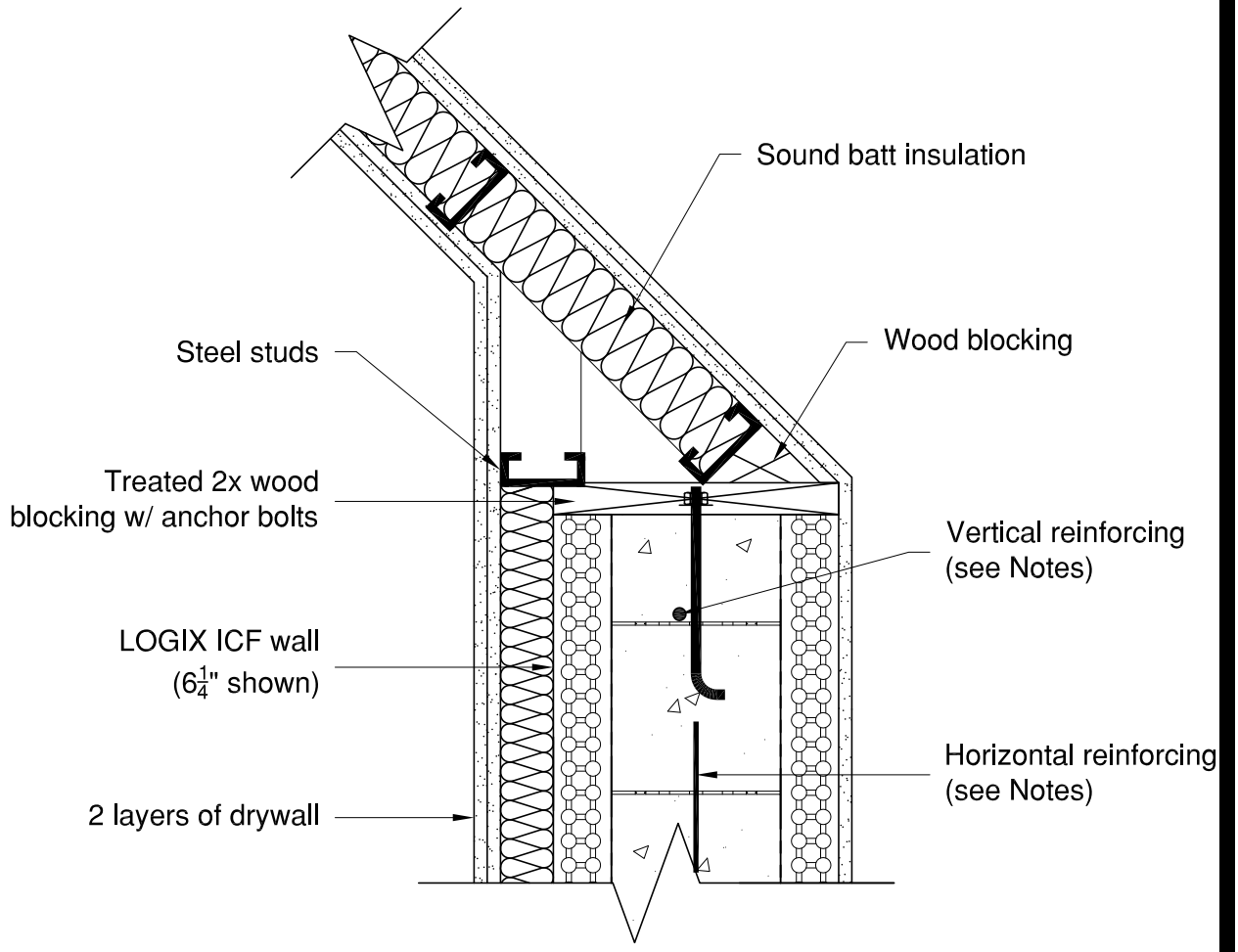

CAD DRAWINGS

NOTES:

1. See Section 6 - Engineering in the LOGIX Design Manual for reinforcement details.

The tables and drawings represented herein are believed to be accurate and conforming to current design and construction practices. However, the tables and drawings should be used as a reference guide only. The user shall check to ensure the drawing meets local building codes, design and construction practices by consulting local building officials and professionals, including any additional requirements. Logix reserves the right to make changes to the tables and drawings without notice and assumes no liability in connection with the use of the tables and drawings including modification, copying or distribution.

5.2.2.5 / 5.2.2.6 - ATTACHING TO EXISTING CONCRETE WALL/CONCRETE MASONRY WALL

All drawings are downloadable at www.logixicf.com

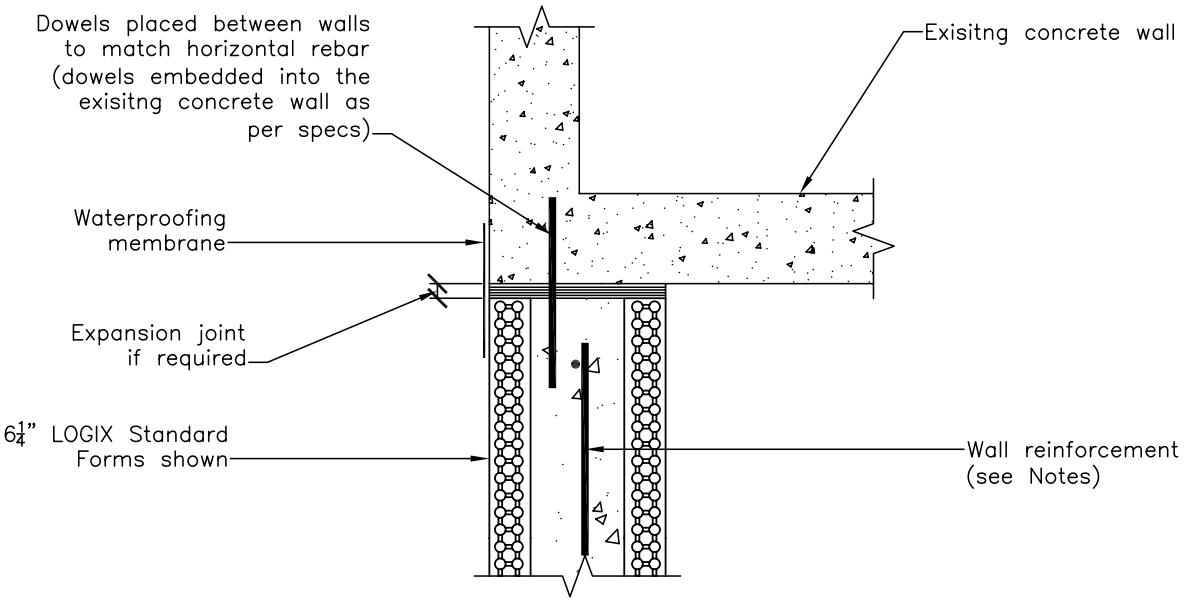

LOGIX WALL ATTACHMENT TO EXISTING CONCRETE WALL

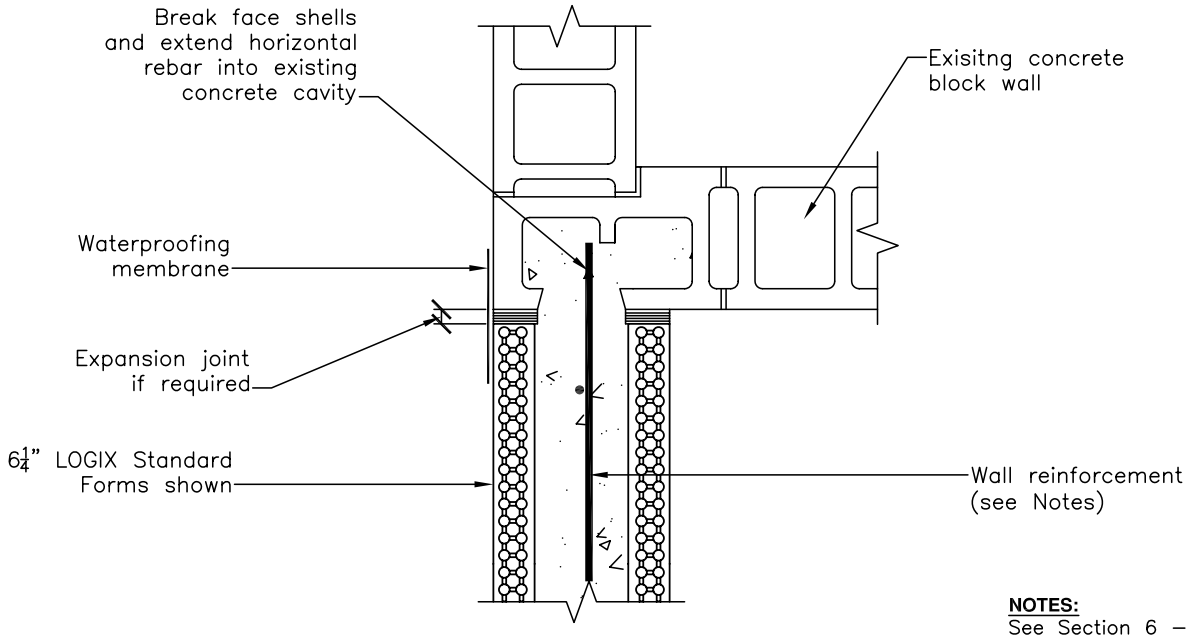

LOGIX WALL ATTACHMENT TO EXISTING CONCRETE MASONRY WALL

NOTES:
See Section 6 – Engineering in the LOGIX Product Manual for reinforcement details.

The tables and drawings represented herein are believed to be accurate and conforming to current design and construction practices. However, the tables and drawings should be used as a reference guide only. The user shall check to ensure the drawing meets local building codes, design and construction practices by consulting local building officials and professionals, including any additional requirements. Logix reserves the right to make changes to the tables and drawings without notice and assumes no liability in connection with the use of the tables and drawings including modification, copying or distribution.

5.2.2.7 - 12" WALL JOGS

All drawings are downloadable at www.logixicf.com

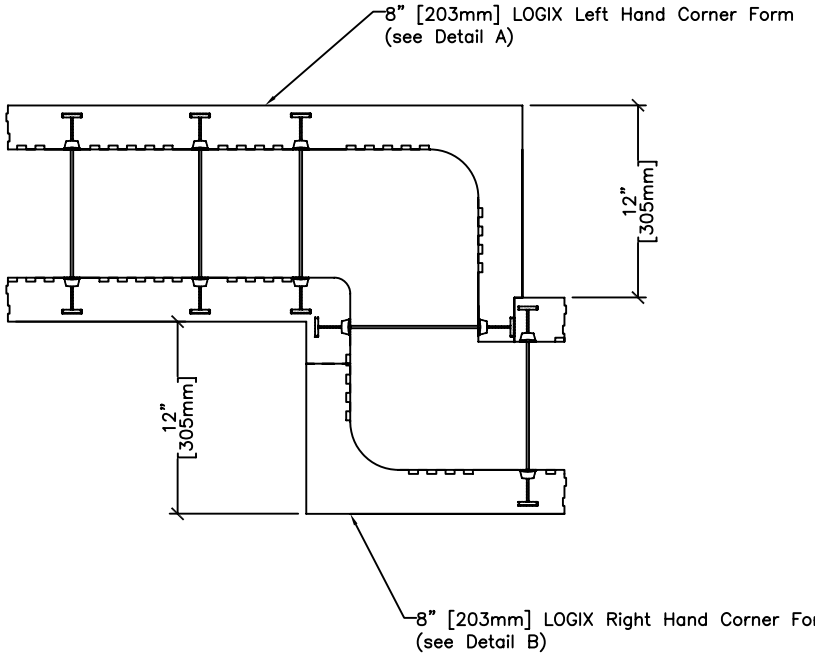

PLAN VIEW

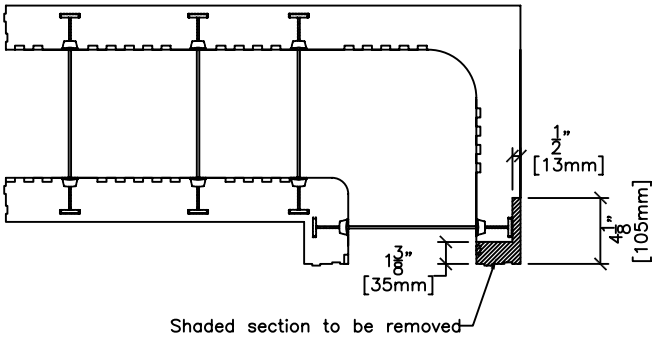

DETAIL A

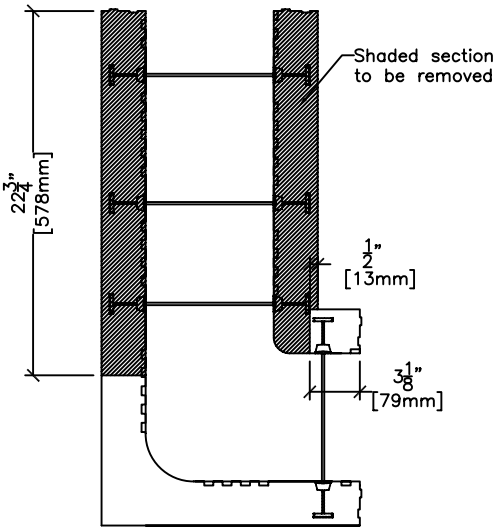

DETAIL B

NOTES:

1. To maintain form integrity apply wooden straps at joints.
2. Creating a 12" (305mm) jog might create misaligned interlocks – cut interlocks where misalignment occurs.
3. To create jog in other direction cut opposite forms.
4. Interlocks not shown for clarity.

The tables and drawings represented herein are believed to be accurate and conforming to current design and construction practices. However, the tables and drawings should be used as a reference guide only. The user shall check to ensure the drawing meets local building codes, design and construction practices by consulting local building officials and professionals, including any additional requirements. Logix reserves the right to make changes to the tables and drawings without notice and assumes no liability in connection with the use of the tables and drawings including modification, copying or distribution.

CAD DRAWINGS

5.2.2.8 - 18" JOGS WITH LEFT & RIGHT HAND 10" LOGIX PRO CORNER FORMS

All drawings are downloadable at www.logixicf.com

CAD DRAWINGS

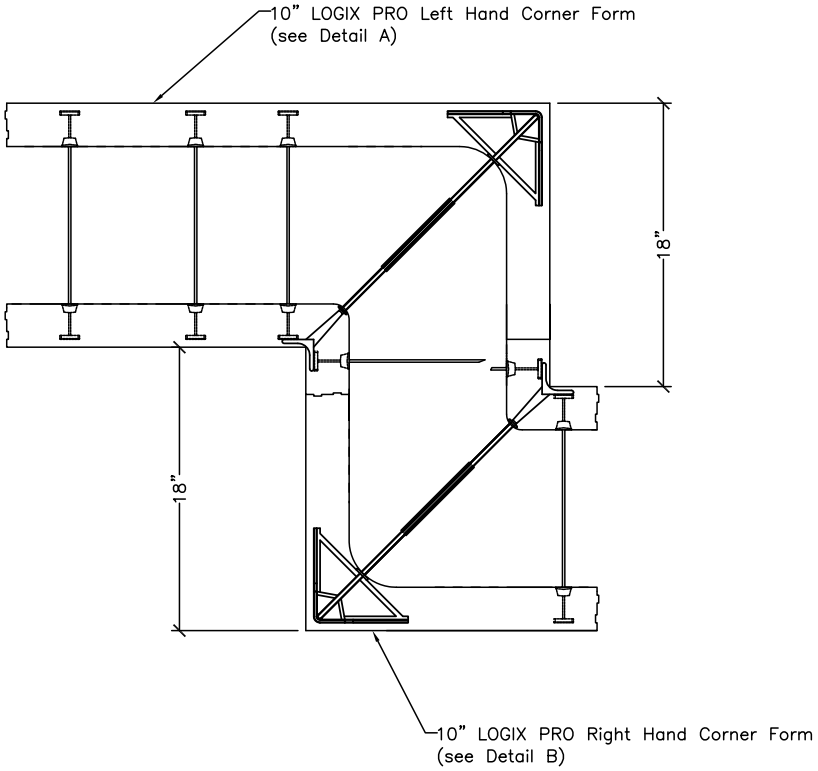

PLAN VIEW

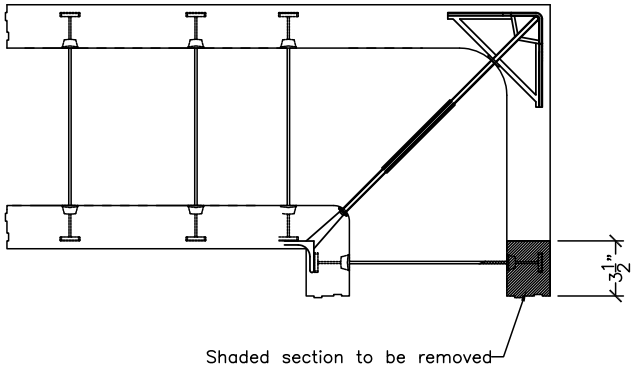

DETAIL A

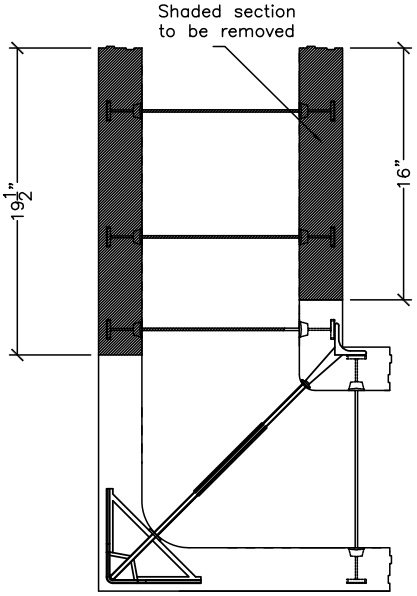

DETAIL B

NOTES:

1. To maintain form integrity apply wooden straps at joints.
2. Creating a jog might create misaligned interlocks – cut interlocks where misalignment occurs.
3. To create jog in other direction cut opposite forms.
4. Interlocks not shown for clarity.

The tables and drawings represented herein are believed to be accurate and conforming to current design and construction practices. However, the tables and drawings should be used as a reference guide only. The user shall check to ensure the drawing meets local building codes, design and construction practices by consulting local building officials and professionals, including any additional requirements. Logix reserves the right to make changes to the tables and drawings without notice and assumes no liability in connection with the use of the tables and drawings including modification, copying or distribution.

5.2.2.9 - HORIZONTAL TRANSITION - 6.25" TO 8" CORNER WALL

All drawings are downloadable at www.logixicf.com

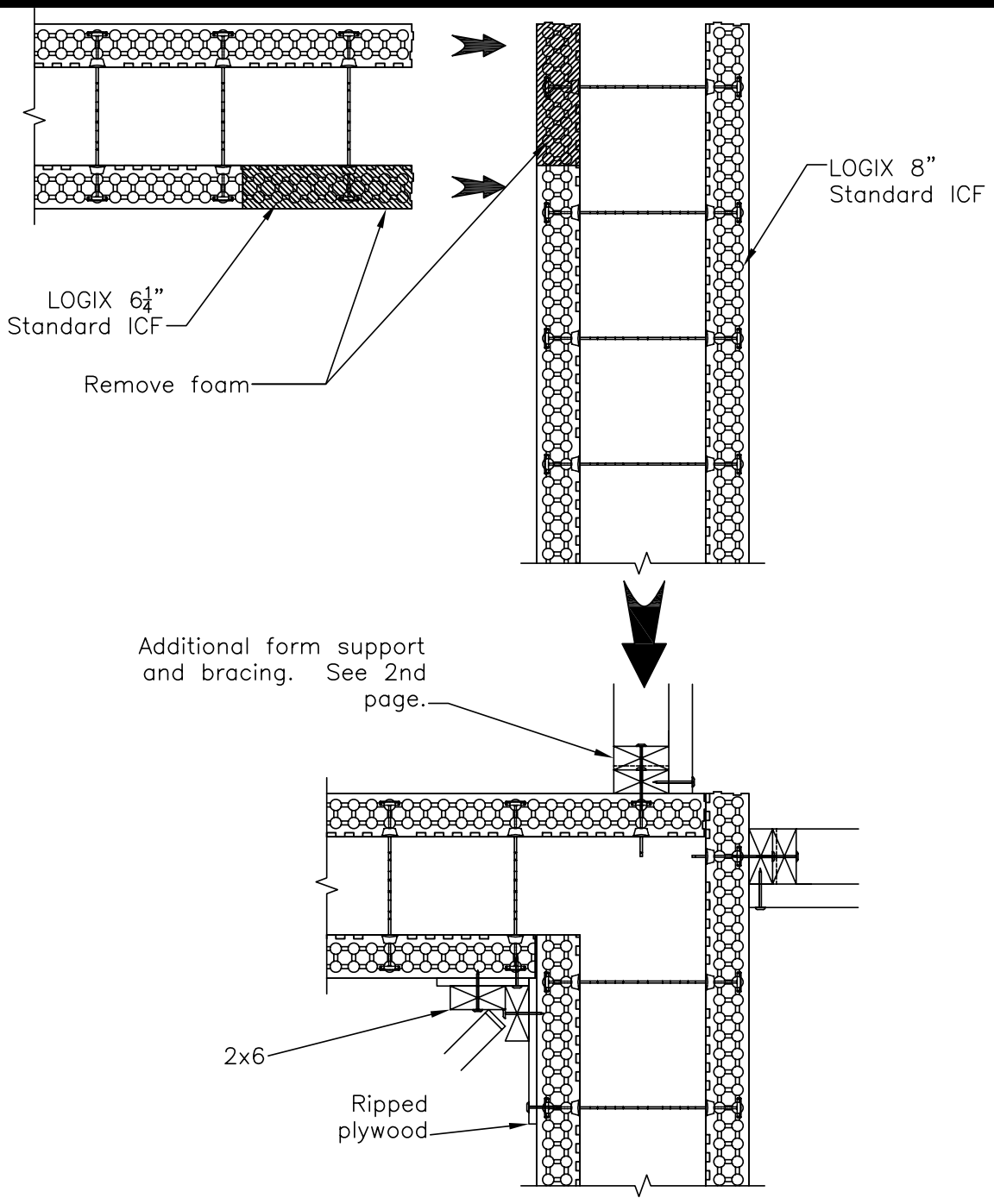

Notes:

1. These drawings illustrate an example of wall bracing for horizontal wall transitions at corners. The contractor shall practice sound judgement (based on wall structure, pouring sequence and other site-conditions) to determine if additional form support and bracing is required.
2. Avoid placing concrete directly into the corners.
3. Follow all required national and local wall brace safety regulations.
4. See page 2 for perspective views.

The tables and drawings represented herein are believed to be accurate and conforming to current design and construction practices. However, the tables and drawings should be used as a reference guide only. The user shall check to ensure the drawing meets local building codes, design and construction practices by consulting local building officials and professionals, including any additional requirements. Logix reserves the right to make changes to the tables and drawings without notice and assumes no liability in connection with the use of the tables and drawings including modification, copying or distribution.

CAD DRAWINGS

5.2.2.9 - HORIZONTAL TRANSITION - 6.25" TO 8" CORNER WALL

CONTINUED

All drawings are downloadable at www.logixicf.com

CAD DRAWINGS

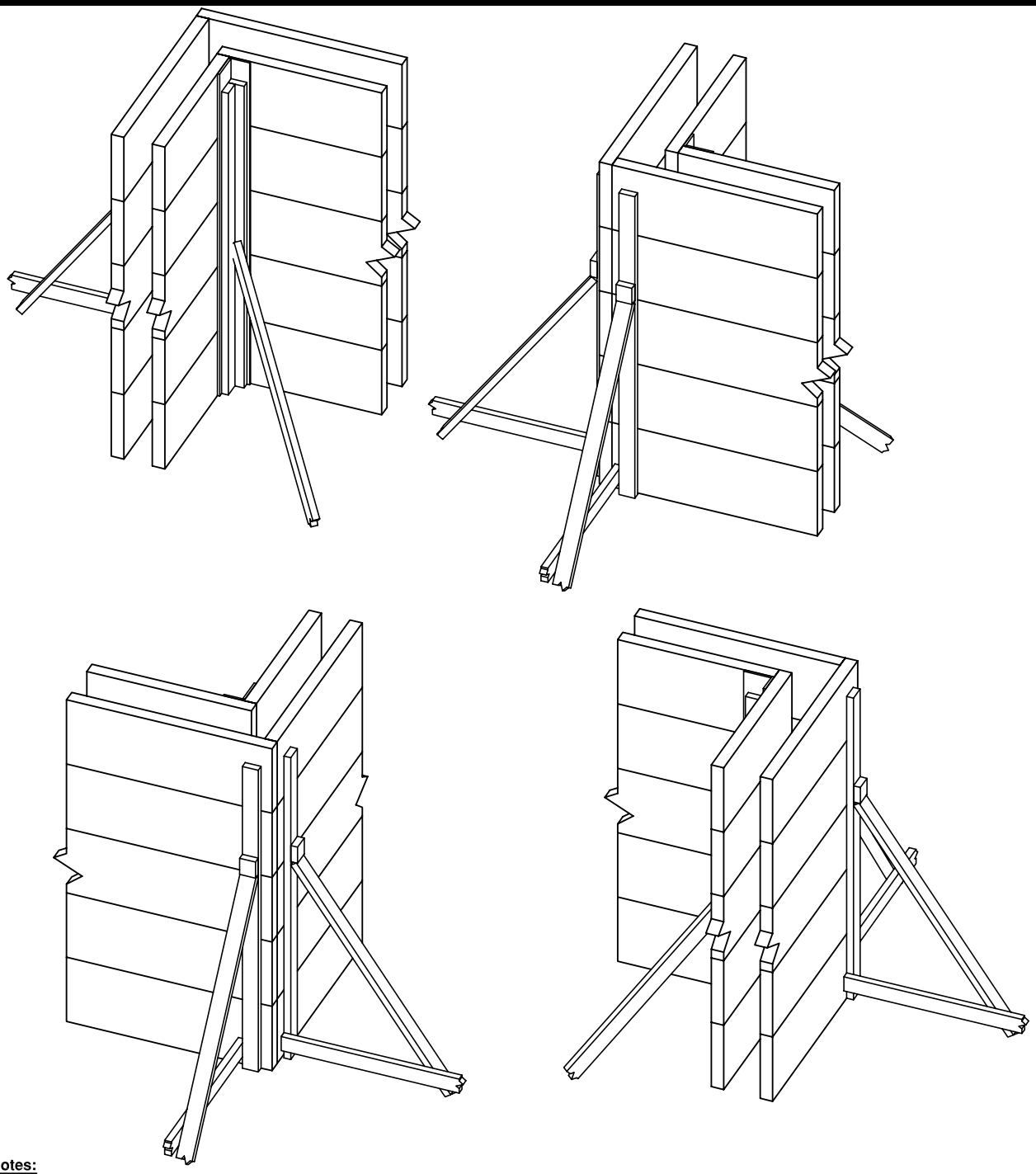

Notes:

1. These drawings illustrate an example of wall bracing for horizontal wall transitions at corners. The contractor shall practice sound judgement (based on wall structure, pouring sequence and other site-conditions) to determine if additional form support and bracing is required.
2. Avoid placing concrete directly into the corners.
3. Follow all required national and local wall brace safety regulations.

The tables and drawings represented herein are believed to be accurate and conforming to current design and construction practices. However, the tables and drawings should be used as a reference guide only. The user shall check to ensure the drawing meets local building codes, design and construction practices by consulting local building officials and professionals, including any additional requirements. Logix reserves the right to make changes to the tables and drawings without notice and assumes no liability in connection with the use of the tables and drawings including modification, copying or distribution.

5.2.2.10 - HORIZONTAL TRANSITION - 6.25" TO 8" TEE WALL WITH END CAP

All drawings are downloadable at www.logixicf.com

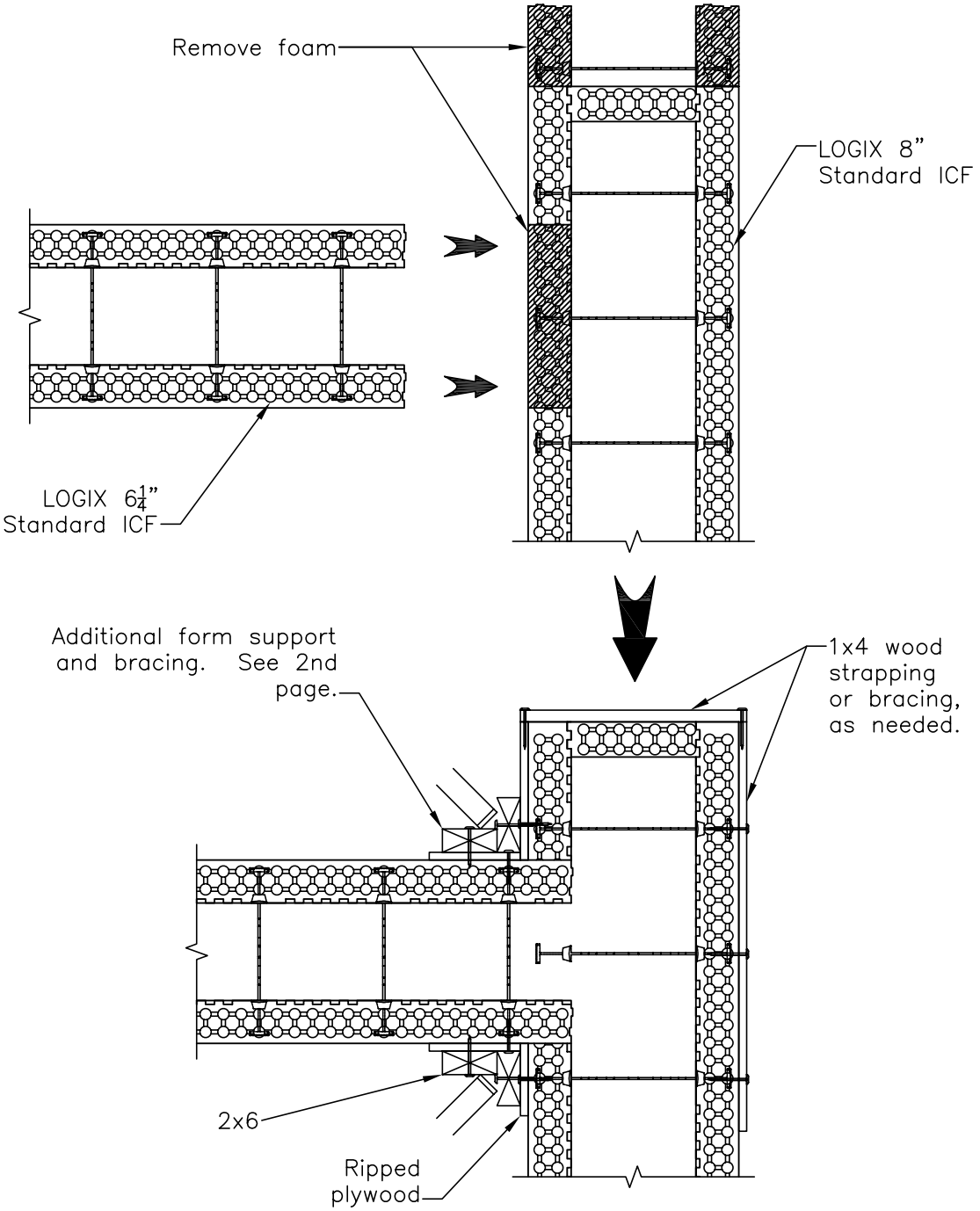

Notes:

1. These drawings illustrate an example of wall bracing for horizontal wall transitions at corners. The contractor shall practice sound judgement (based on wall structure, pouring sequence and other site-conditions) to determine if additional form support and bracing is required.
2. Avoid placing concrete directly into the corners.
3. Follow all required national and local wall brace safety regulations.
4. See page 2 for perspective views.

The tables and drawings represented herein are believed to be accurate and conforming to current design and construction practices. However, the tables and drawings should be used as a reference guide only. The user shall check to ensure the drawing meets local building codes, design and construction practices by consulting local building officials and professionals, including any additional requirements. Logix reserves the right to make changes to the tables and drawings without notice and assumes no liability in connection with the use of the tables and drawings including modification, copying or distribution.

CAD DRAWINGS

5.2.2.10 - HORIZONTAL TRANSITION - 6.25" TO 8" TEE WALL WITH END CAP CONTINUED

All drawings are downloadable at www.logixicf.com

CAD DRAWINGS

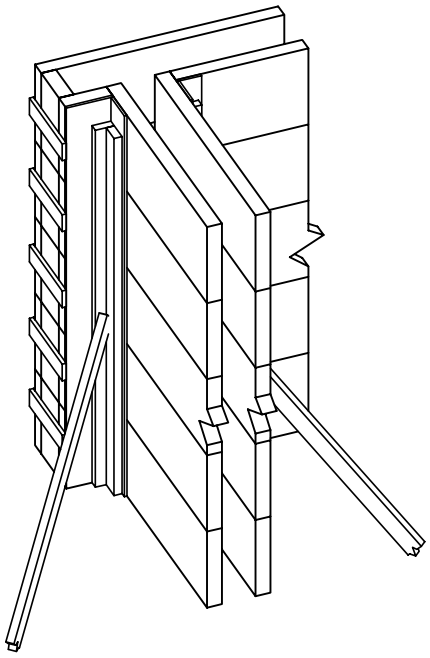

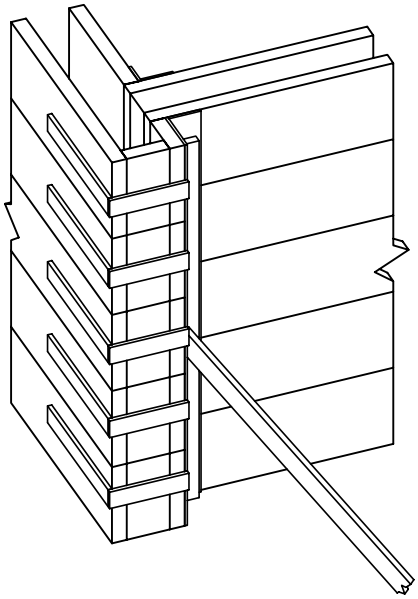

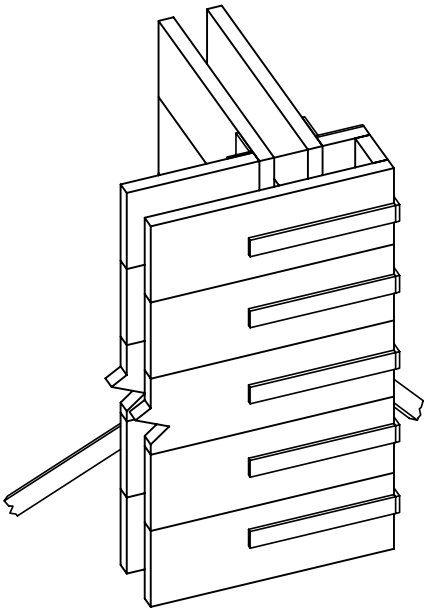

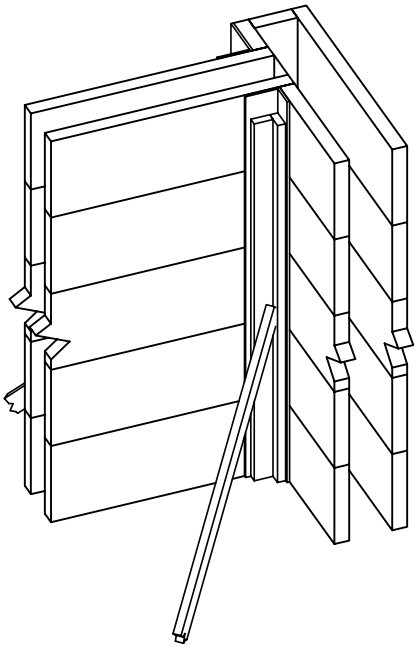

Notes:

1. These drawings illustrate an example of wall bracing for horizontal wall transitions at corners. The contractor shall practice sound judgement (based on wall structure, pouring sequence and other site-conditions) to determine if additional form support and bracing is required.
2. Avoid placing concrete directly into the corners.
3. Follow all required national and local wall brace safety regulations.
4. See page 2 for perspective views.

The tables and drawings represented herein are believed to be accurate and conforming to current design and construction practices. However, the tables and drawings should be used as a reference guide only. The user shall check to ensure the drawing meets local building codes, design and construction practices by consulting local building officials and professionals, including any additional requirements. Logix reserves the right to make changes to the tables and drawings without notice and assumes no liability in connection with the use of the tables and drawings including modification, copying or distribution.

Reprinted 2017

Rev. Dec 23/13

5.2.2.11 - PRECAST PANEL WALL

All drawings are downloadable at www.logixicf.com

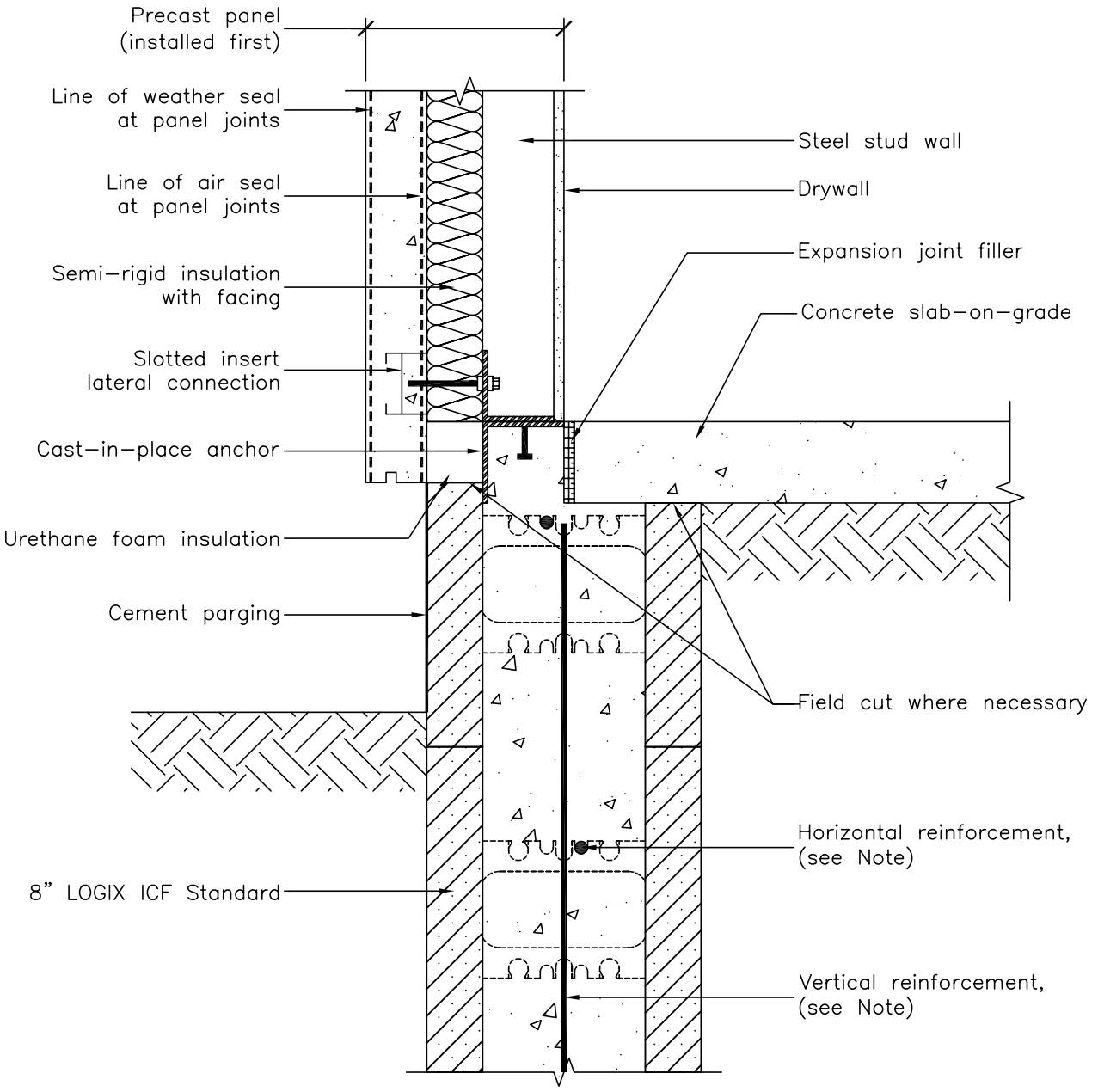

NOTES:

See Section 6 – Engineering in the LOGIX Product Manual for reinforcement details.

The tables and drawings represented herein are believed to be accurate and conforming to current design and construction practices. However, the tables and drawings should be used as a reference guide only. The user shall check to ensure the drawing meets local building codes, design and construction practices by consulting local building officials and professionals, including any additional requirements. Logix reserves the right to make changes to the tables and drawings without notice and assumes no liability in connection with the use of the tables and drawings including modification, copying or distribution.

CAD DRAWINGS

5.2.2.12 - CANOPY FRAMING

All drawings are downloadable at www.logixicf.com

CAD DRAWINGS

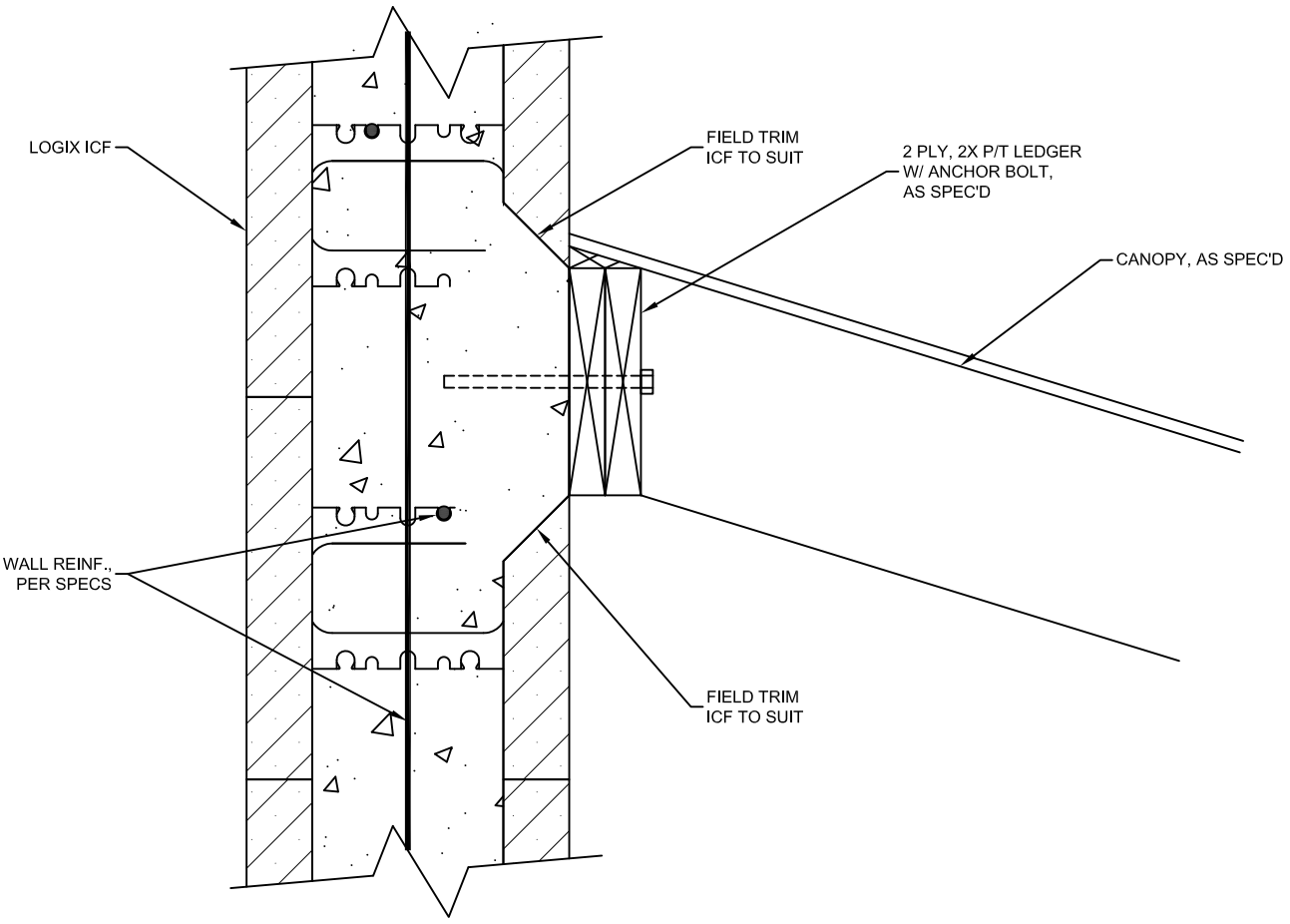

The tables and drawings represented herein are believed to be accurate and conforming to current design and construction practices. However, the tables and drawings should be used as a reference guide only. The user shall check to ensure the drawing meets local building codes, design and construction practices by consulting local building officials and professionals, including any additional requirements. Logix reserves the right to make changes to the tables and drawings without notice and assumes no liability in connection with the use of the tables and drawings including modification, copying or distribution.

Reprinted 2017

5.2.2.13 - DOUBLE FRAMED WALL ON LOGIX ICF WITH BRICK LEDGE

All drawings are downloadable at www.logixicf.com

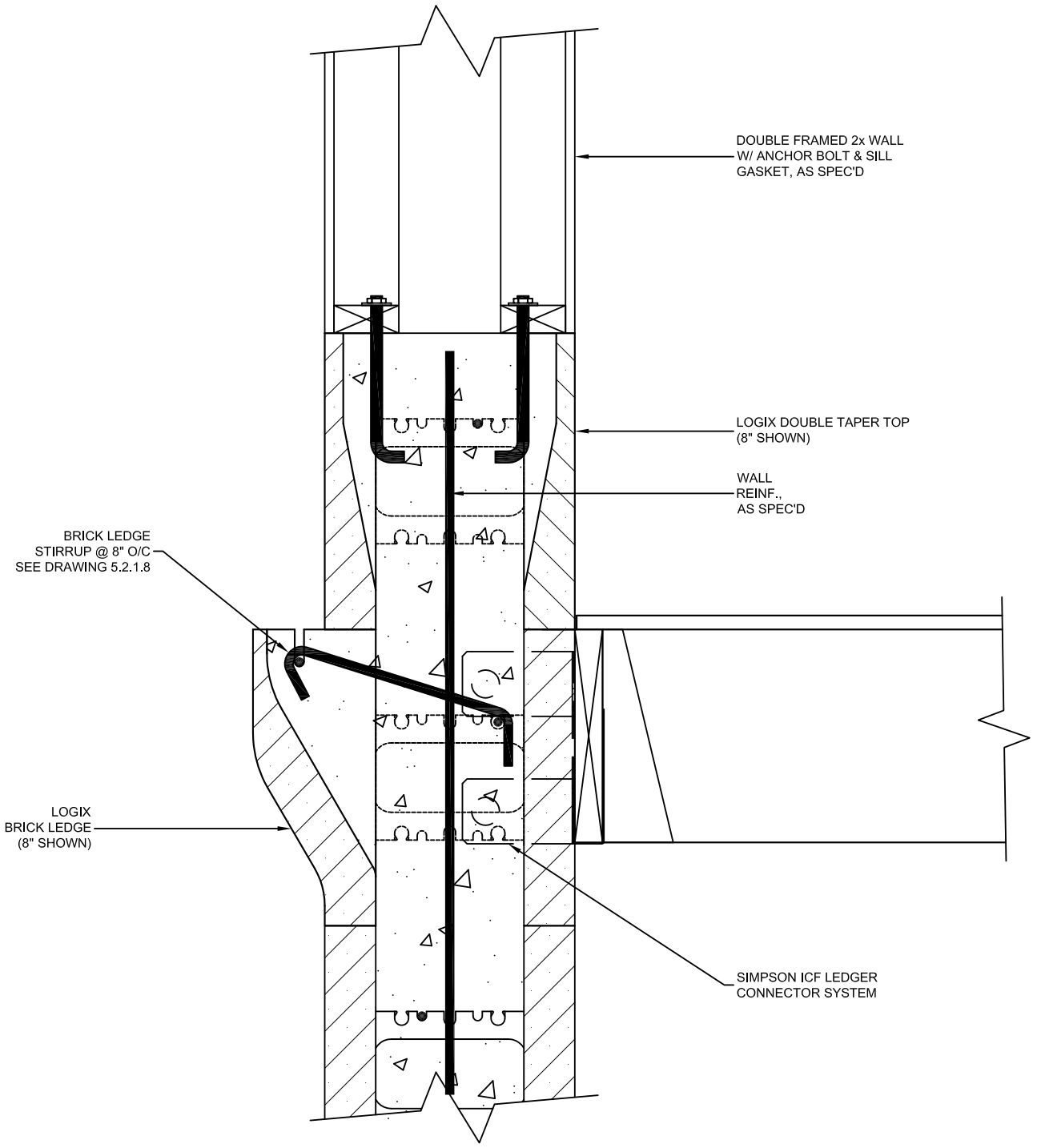

CAD DRAWINGS

The tables and drawings represented herein are believed to be accurate and conforming to current design and construction practices. However, the tables and drawings should be used as a reference guide only. The user shall check to ensure the drawing meets local building codes, design and construction practices by consulting local building officials and professionals, including any additional requirements. Logix reserves the right to make changes to the tables and drawings without notice and assumes no liability in connection with the use of the tables and drawings including modification, copying or distribution.

5.2.3 - EXTERIOR FINISHES

5.2.3 - EXTERIOR FINISHES
5.2.3.1 - EXTERIOR FINISHES

All drawings are downloadable at www.logixicf.com

CAD DRAWINGS

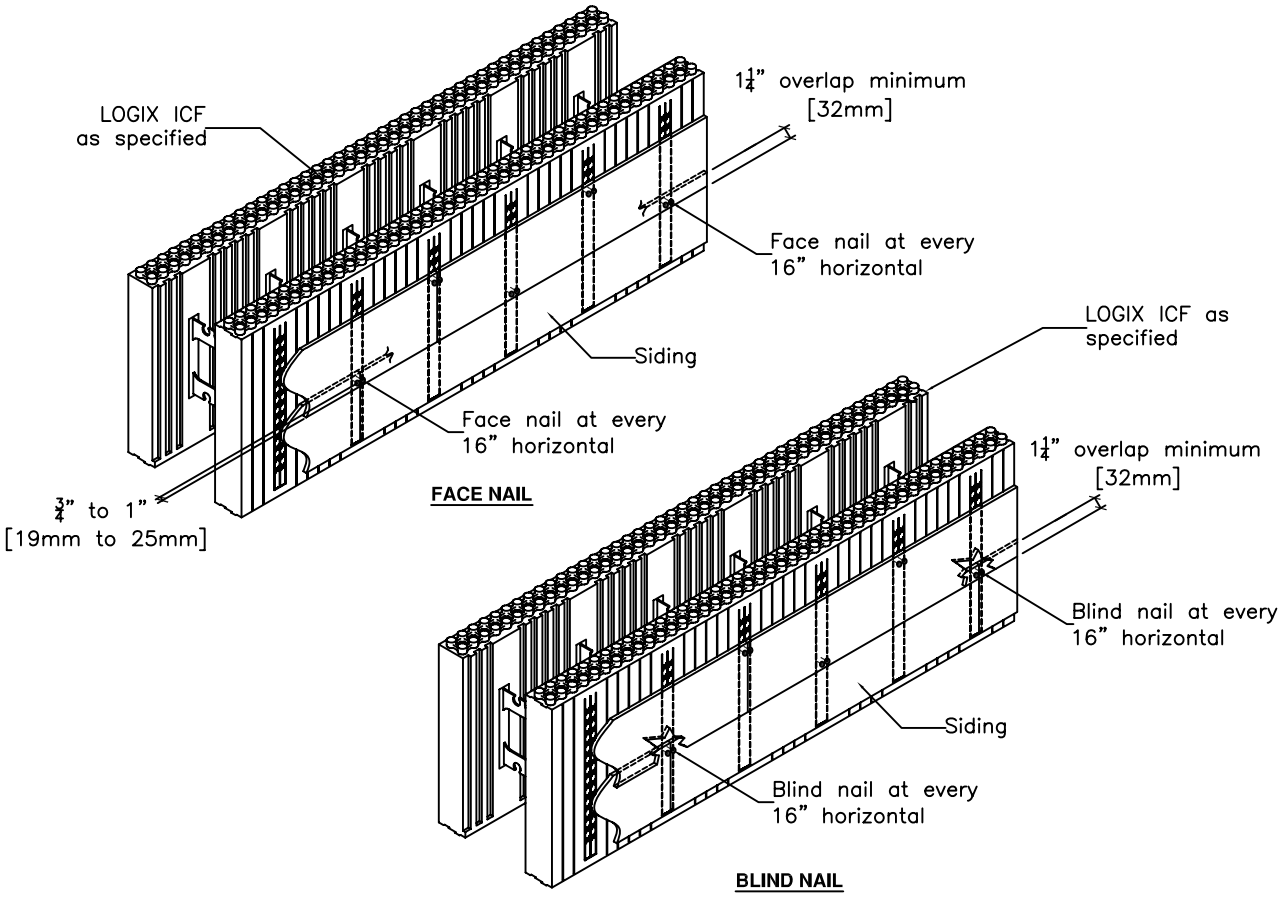

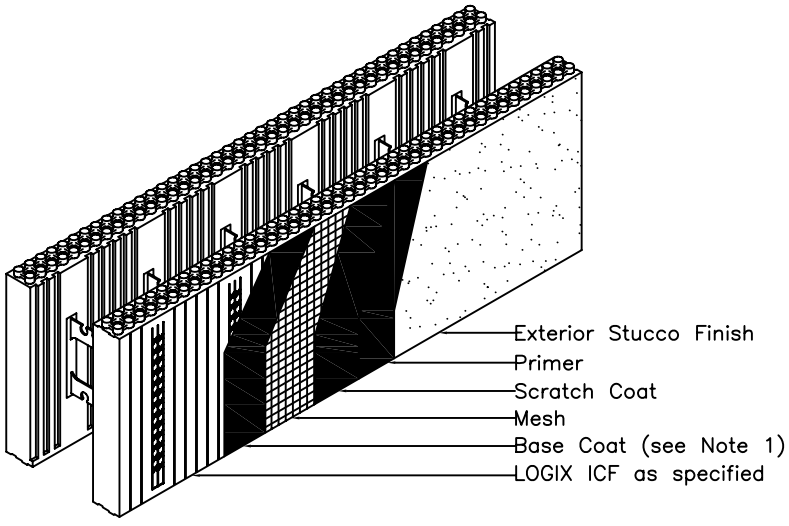

NOTES:

1. If no base coat, fasten mesh to ICF with staples.
2. Detail above is a general drawing only. Follow manufacturer's installation instructions.
3. See LOGIX Product Manual section 2.21 for supporting exterior finish products.
4. See LOGIX Product Manual section 2.18.3 for more information on exterior siding.

The tables and drawings represented herein are believed to be accurate and conforming to current design and construction practices. However, the tables and drawings should be used as a reference guide only. The user shall check to ensure the drawing meets local building codes, design and construction practices by consulting local building officials and professionals, including any additional requirements. Logix reserves the right to make changes to the tables and drawings without notice and assumes no liability in connection with the use of the tables and drawings including modification, copying or distribution.

Reprinted 2017

Rev. Dec 23/13

5.2.3.2 - LOGIX ICF WITH STONE VENEER

All drawings are downloadable at www.logixicf.com

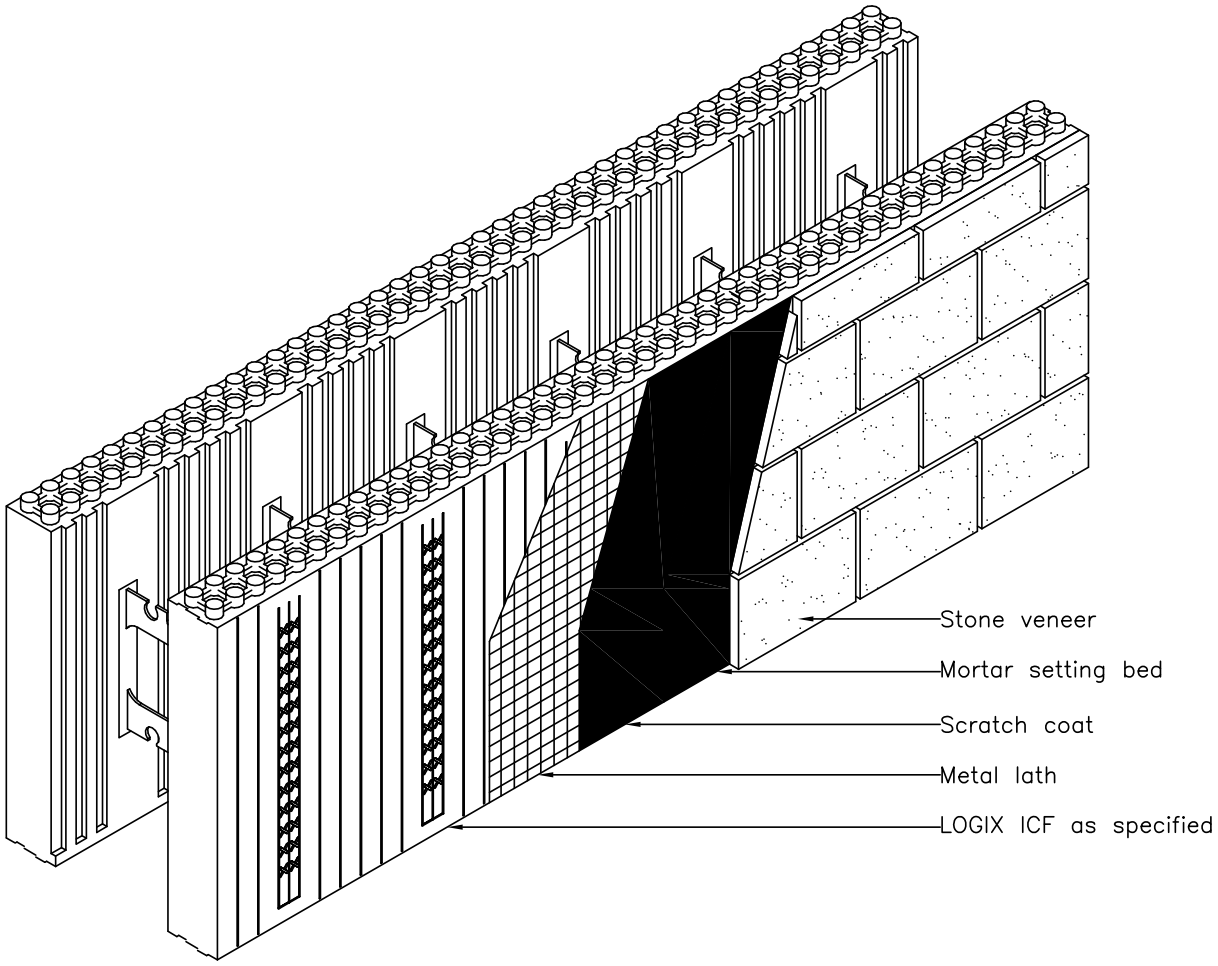

CAD DRAWINGS

NOTES:

1. All fasteners to be attached to the embedded furring tabs.
2. Recommended min. fastener spacings:
   1. Grabber construction non–corrosive screws: No.8 min. 1.25" long, 8" o.c. horiz., 12" o.c. vert. spacing. ($\frac{3}{8}$" head ring shank nails with washers can be used in lieu of No.8 screws)
   OR
   2. Staples 1.59mm 16ga. min. 1.25" long, 8" o.c. horiz., 5" o.c. vert. spacing.
3. Always follow manufacturer's instructions or recommendations.

The tables and drawings represented herein are believed to be accurate and conforming to current design and construction practices. However, the tables and drawings should be used as a reference guide only. The user shall check to ensure the drawing meets local building codes, design and construction practices by consulting local building officials and professionals, including any additional requirements. Logix reserves the right to make changes to the tables and drawings without notice and assumes no liability in connection with the use of the tables and drawings including modification, copying or distribution.

5.2.3.3 - WALL BASE WEEP SCREED

All drawings are downloadable at www.logixicf.com

NOTES:

See Section 6 – Engineering in the LOGIX Design Manual or the LOGIX Field Manual for reinforcement details.

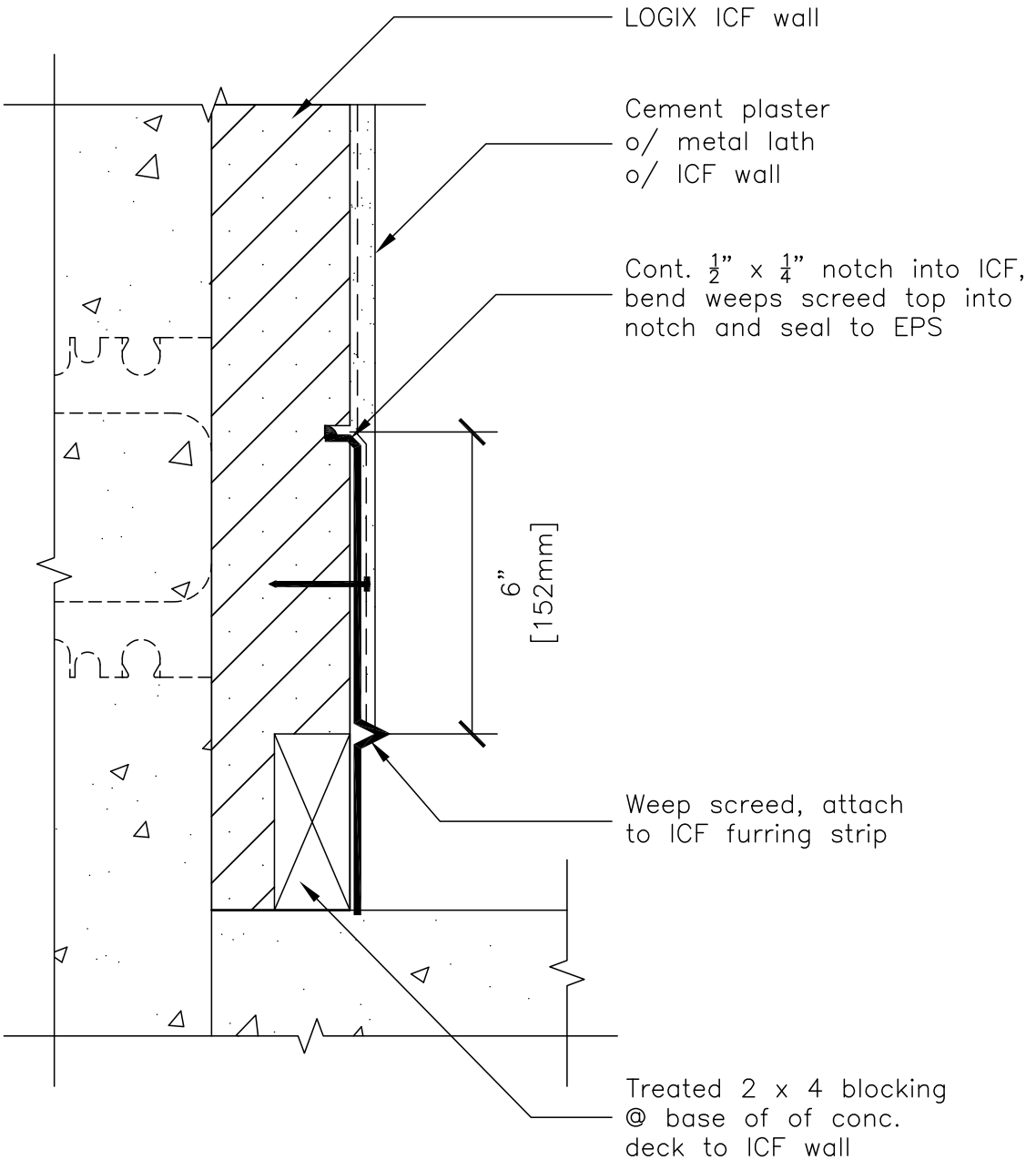

The tables and drawings represented herein are believed to be accurate and conforming to current design and construction practices. However, the tables and drawings should be used as a reference guide only. The user shall check to ensure the drawing meets local building codes, design and construction practices by consulting local building officials and professionals, including any additional requirements. Logix reserves the right to make changes to the tables and drawings without notice and assumes no liability in connection with the use of the tables and drawings including modification, copying or distribution.

CAD DRAWINGS

5.2.3.4 - WEEP SCREED & FLASHING AT CONCRETE DECK

All drawings are downloadable at www.logixicf.com

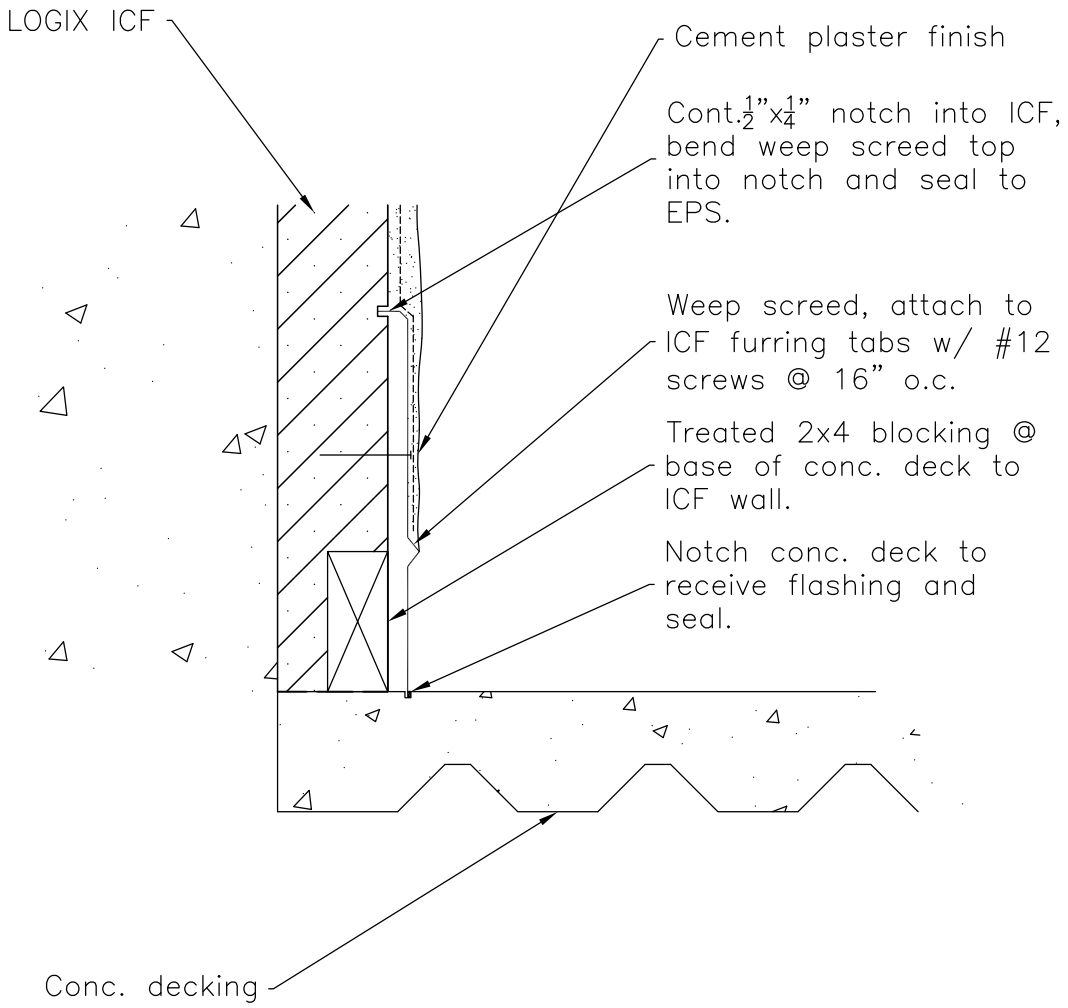

CAD DRAWINGS

The tables and drawings represented herein are believed to be accurate and conforming to current design and construction practices. However, the tables and drawings should be used as a reference guide only. The user shall check to ensure the drawing meets local building codes, design and construction practices by consulting local building officials and professionals, including any additional requirements. Logix reserves the right to make changes to the tables and drawings without notice and assumes no liability in connection with the use of the tables and drawings including modification, copying or distribution.

5.2.3.5 - ZERO LOT LINE CONSTRUCTION DETAIL

All drawings are downloadable at www.logixicf.com

CAD DRAWINGS

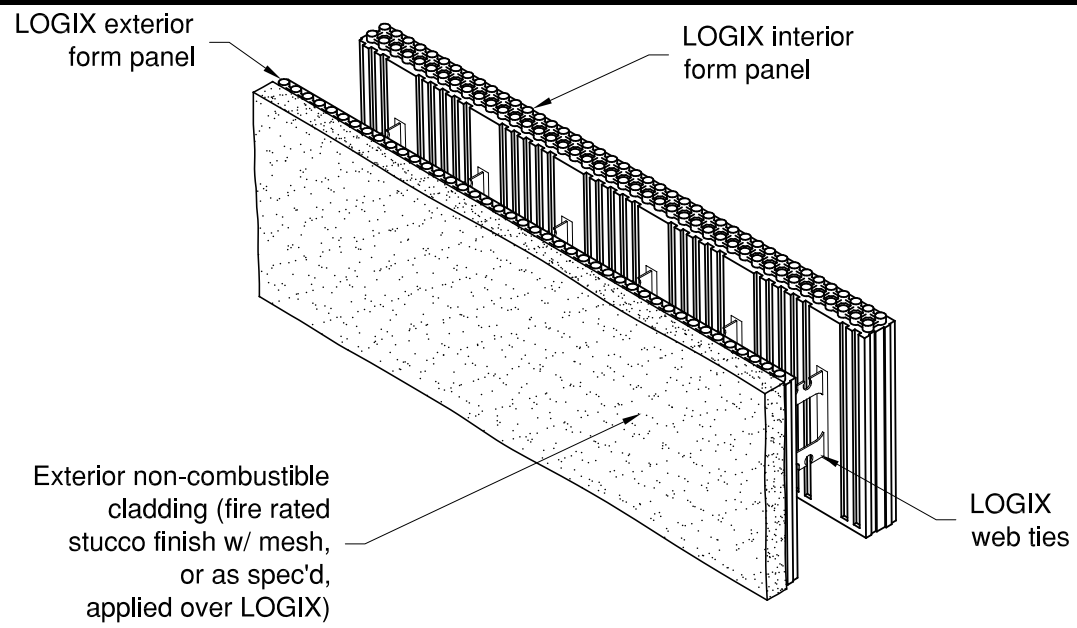

LOGIX ICF FORM BLOCK

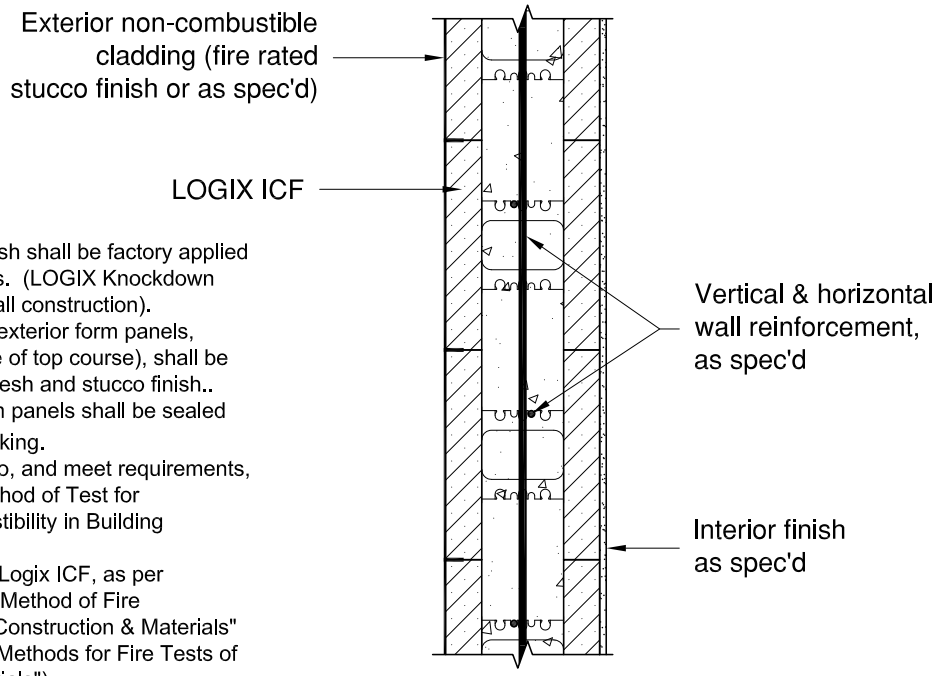

LOGIX WALL SECTION

NOTES:

1. Fire rated stucco w/ mesh finish shall be factory applied to LOGIX exterior form panels. (LOGIX Knockdown forms shall be used for the wall construction).
2. All exposed edges of LOGIX exterior form panels, including top of wall (top edge of top course), shall be fully covered with fire rated mesh and stucco finish..
3. All joints/seams between form panels shall be sealed with minimum $\frac{3}{8}$" fire stop caulking.
4. Stucco finish shall be tested to, and meet requirements, of CAN4-S114 "Standard Method of Test for Determination of Non-combustibility in Building Materials".
5. 2 hour minimum fire rating of Logix ICF, as per CAN/ULC S101-M "Standard Method of Fire Endurance Tests of Building Construction & Materials" (ASTM E119 "Standard Test Methods for Fire Tests of Building Construction & Materials").
6. Refer to Section 6 Engineering in the LOGIX Design Manual for wall reinforcement.

The tables and drawings represented herein are believed to be accurate and conforming to current design and construction practices. However, the tables and drawings should be used as a reference guide only. The user shall check to ensure the drawing meets local building codes, design and construction practices by consulting local building officials and professionals, including any additional requirements. Logix reserves the right to make changes to the tables and drawings without notice and assumes no liability in connection with the use of the tables and drawings including modification, copying or distribution.

Reprinted 2017

Rev. Dec 23/13

5.2.3.6 - TERMITE STRIP

All drawings are downloadable at www.logixicf.com

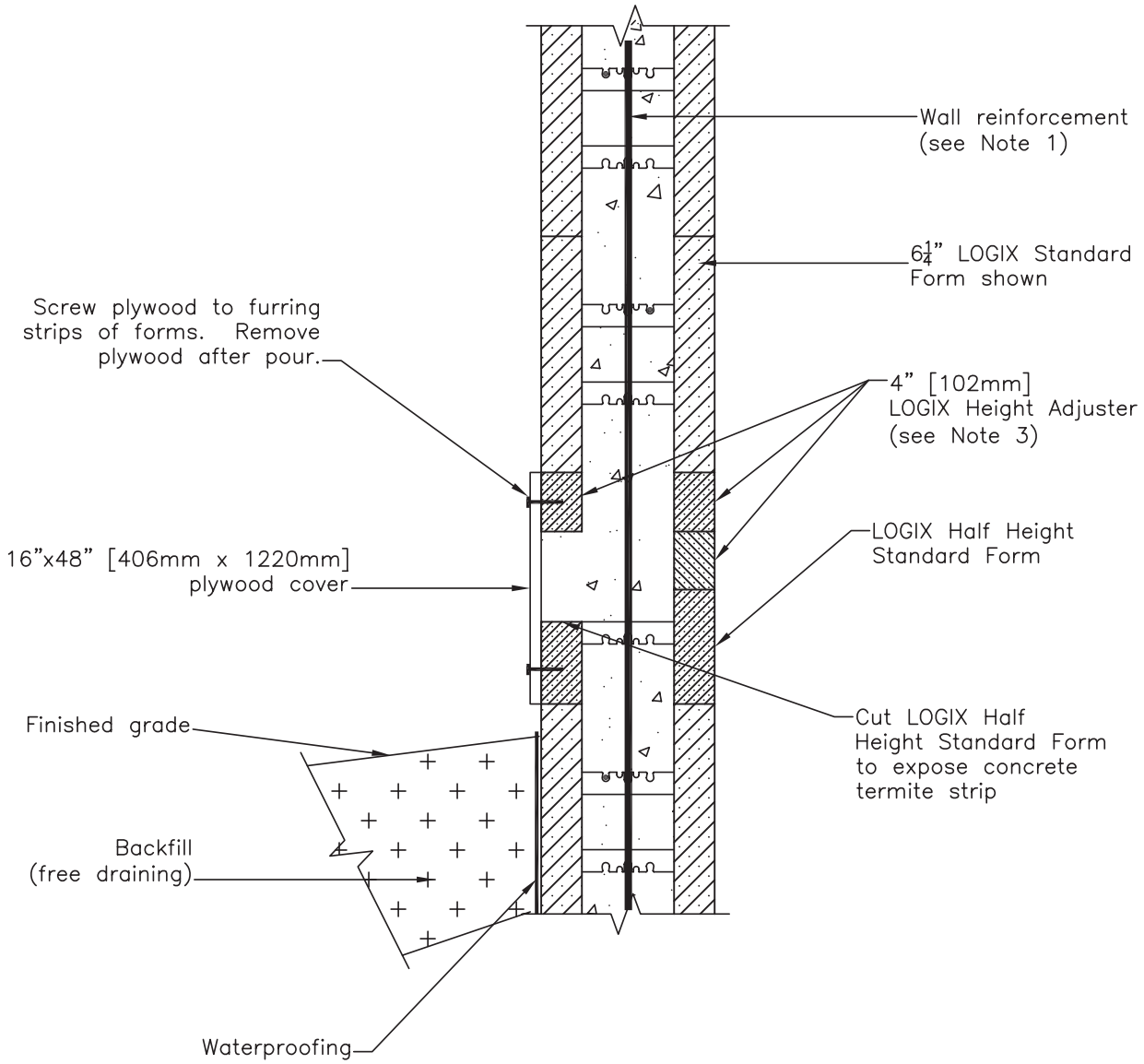

NOTES:

1. See Section 6 – Engineering in the LOGIX Product Manual for reinforcement details.
2. Treating the soil ahead of time is another method of avoiding termite related problems.
3. The use of 4" Height Adjusters will ensure there is an 8" gap exposing any termite presence in the wall.
4. Please refer to local building codes for more information on termite control.

The tables and drawings represented herein are believed to be accurate and conforming to current design and construction practices. However, the tables and drawings should be used as a reference guide only. The user shall check to ensure the drawing meets local building codes, design and construction practices by consulting local building officials and professionals, including any additional requirements. Logix reserves the right to make changes to the tables and drawings without notice and assumes no liability in connection with the use of the tables and drawings including modification, copying or distribution.

CAD DRAWINGS