FLEETWOOD
WINDOWS & DOORS

Series 3900-T
Aluminum Side Hinged Single Door
Inswing/Outswing
"IMPACT"

GENERAL NOTES

1. This product has been evaluated and is in compliance with the 7th Edition (2020) Florida Building Code (FBC) structural requirements including the "High Velocity Hurricane Zone" (HVHZ).
2. Product anchors shall be as listed and spaced as shown on details. Anchor embedment to base material shall be beyond wall dressing or stucco.
3. When used in the "HVHZ" this product complies with Section 1626 of the Florida Building Code and does not require an impact resistant covering.
4. When used in areas outside of the "HVHZ" requiring wind borne debris protection this product complies with FBC Sections 1609.1.2 & R301.2.1.2 and does not require an impact resistant covering. This product meets missile level "D" and includes Wind Zone 4 as defined in ASTM E 1996 and FBC Sections 1609.1.2.2 & R301.2.1.2.1.
5. Site conditions that deviate from the details of this drawing require further engineering analysis by a licensed engineer or registered architect.
7. This product meets water infiltration requirements for "HVHZ".
8. Aluminum components, including fasteners, shall meet the requirements of FBC Section 2003.
9. Gaskets shall comply with FBC Section 2411.3.4.

TABLE OF CONTENTS

SHEET#	DESCRIPTION
1	Typical elevations, design pressures and general notes
2	Door panel & glazing details
3	Vertical cross sections
4	Vertical cross sections
5	Horizontal cross sections
6	Buck and frame anchoring
7	Bill of materials & components

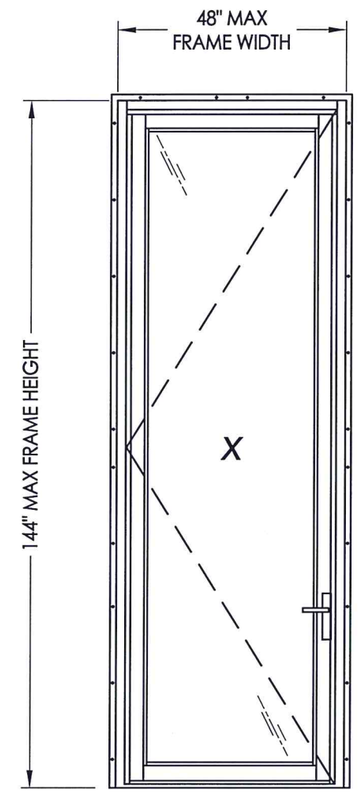

FIN MOUNT

MAX O.A. FRAME DIMENSION	MAX DOOR D.L.O. DIMENSION	GLASS TYPE	DESIGN PRESSURE (PSF) INSWING		DESIGN PRESSURE (PSF) OUTSWING	
			POSITIVE	NEGATIVE	POSITIVE	NEGATIVE
48.0" X 144.0"	35.0" X 132.13"	G1, G2	+60.0	-65.0	+60.0	-60.0

L. F. SCHMIDT LICENSE No. 43409 STATE OF FLORIDA PROFESSIONAL ENGINEER
December 14, 2020
Documents Prepared By:
Lyndon F. Schmidt
P.E. No. 43409
RW BUILDING CONSULTANTS, INC.
P.O. Box 230, Valrico, FL 33595
Phone No.: 813.659.9197
FBPE Registry No. 9813

PRODUCT: FLEETWOOD WINDOWS & DOORS

PART OR ASSEMBLY: TYPICAL ELEVATION, DESIGN PRESSURES & GENERAL NOTES

REVISIONS

NO.	DATE	BY

DATE: 12/7/20
SCALE: N.T.S.
DWG. BY: RW
CHK. BY: LFS
DRAWING NO.: FL-17954.8
SHEET 1 OF 7

© 2020 R.W. BUILDING CONSULTANTS INC.

Z:\Clients\Fleetwood PERMANENT\A - Florida Product Approvals\FL-17954 Side Hinged Door\C - Drawings\FL 17954 (2020)\FL-17954.8.dwg

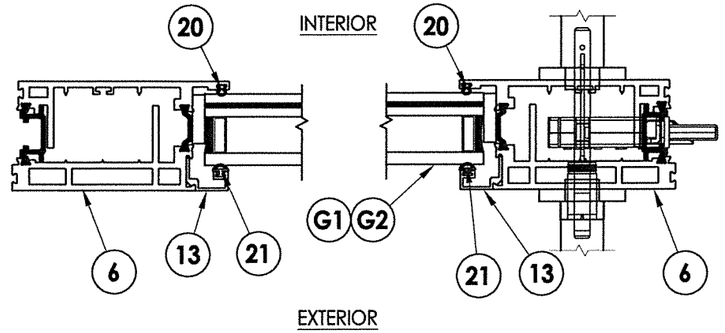

1/2 HORIZONTAL CROSS SECTION

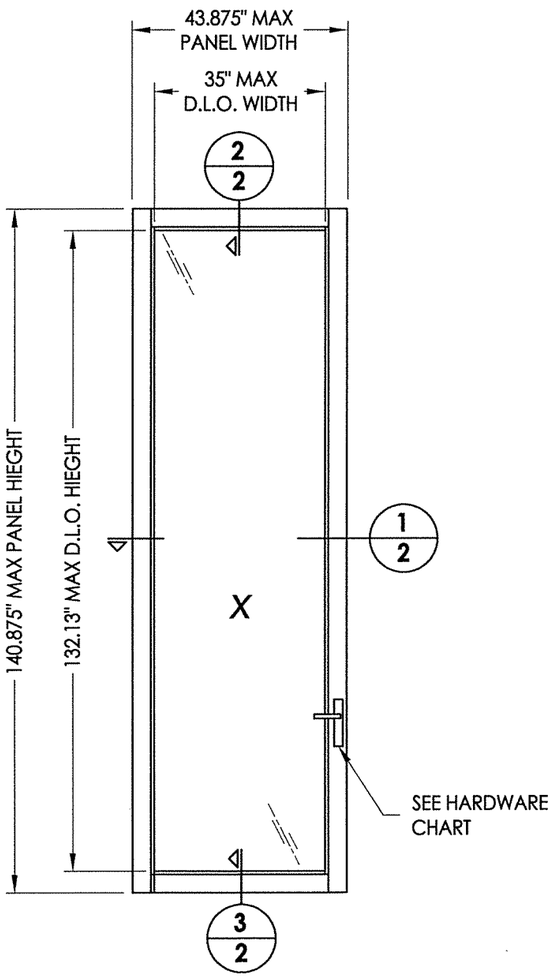

Glazed Door

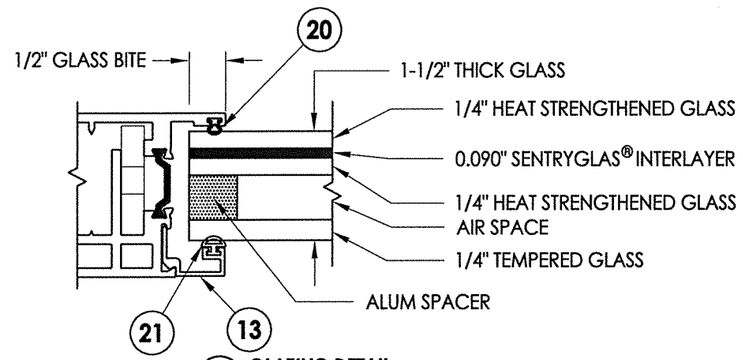

G1 GLAZING DETAIL

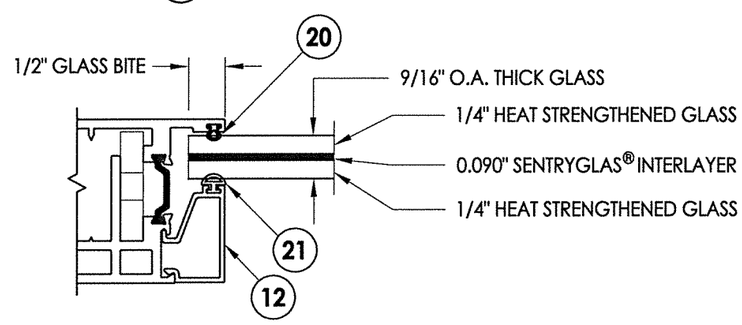

G1 GLAZING DETAIL

NOTE: GLAZING > 36" WIDE REQUIRES AT LEAST TWO (2) SETTING BLOCKS CONFORMING TO FBC SECTION 2411.3.3.1.

HARDWARE TABLE	
MANUFACTURER	MODEL
TRUTH	MULTI-POINT LOCK: 5 POINT LOCK
FUHR	MULTI-POINT ELECTRONIC LOCK: 5 POINT LOCK

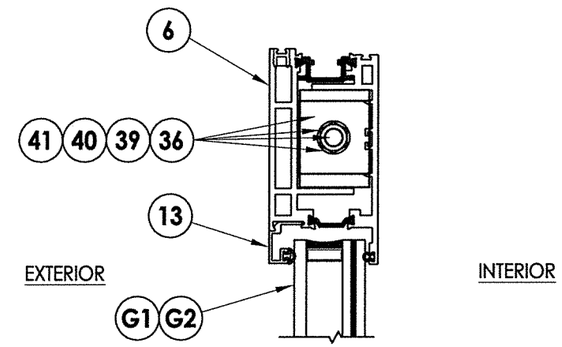

2/2 VERTICAL CROSS SECTION

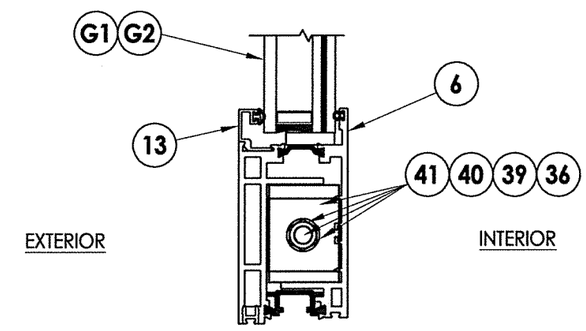

3/2 VERTICAL CROSS SECTION

STATE OF FLORIDA
L. F. SCHMIDT
LICENSE
No. 43409
PROFESSIONAL ENGINEER

December 14, 2020
Documents Prepared By:
Lyndon F. Schmidt
P.E. No. 43409

BUILDING CONSULTANTS, INC.
P.O. Box 230, Valrico, FL 33595
Phone No.: 813.659.9197
FBPE Registry No. 9813

PRODUCT: FLEETWOOD WINDOWS & DOORS

PART OR ASSEMBLY: DOOR PANEL & GLAZING DETAILS

NO.	DATE	REVISIONS	BY

DATE: 12/7/20
SCALE: N.T.S.
DWG. BY: RW
CHK. BY: LFS
DRAWING NO.: FL-17954.8
SHEET 2 OF 7

© 2020 R.W. BUILDING CONSULTANTS INC.

Z:\Clients\Fleetwood PERMANENT\A - Florida Product Approvals\FL-17954 Side Hinged Door\C - Drawings\FL 17954 (2020)\FL-17954.8.dwg

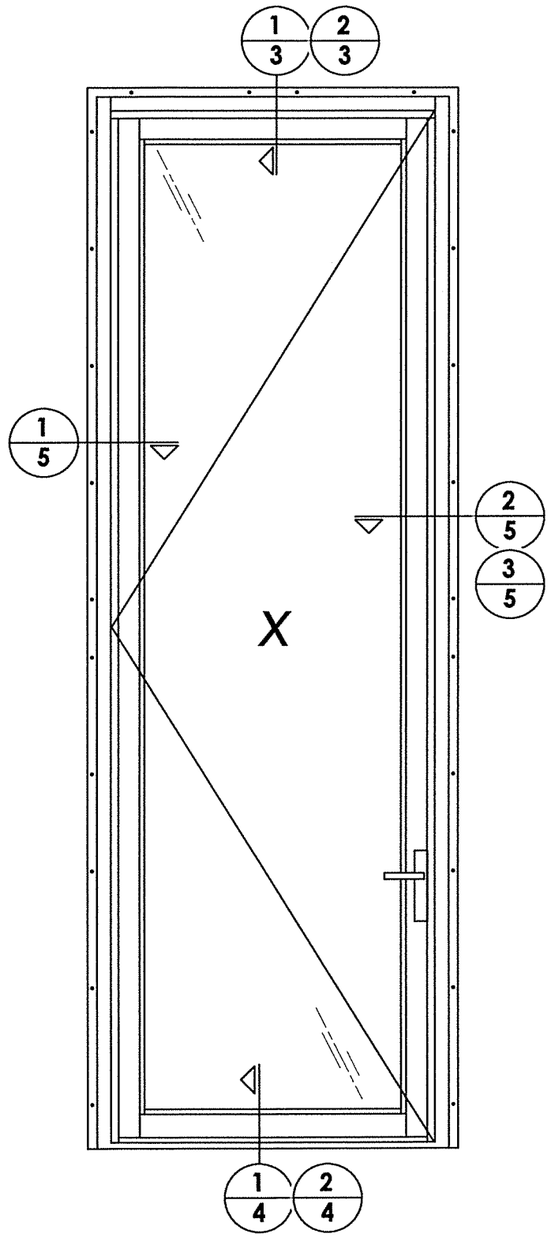

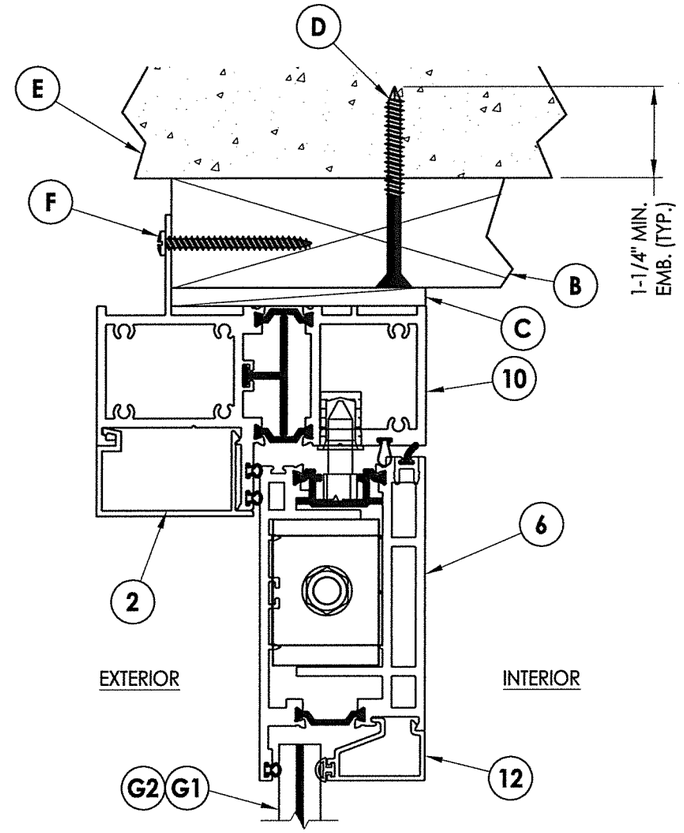

1/3 **VERTICAL CROSS SECTION**
Inswing shown

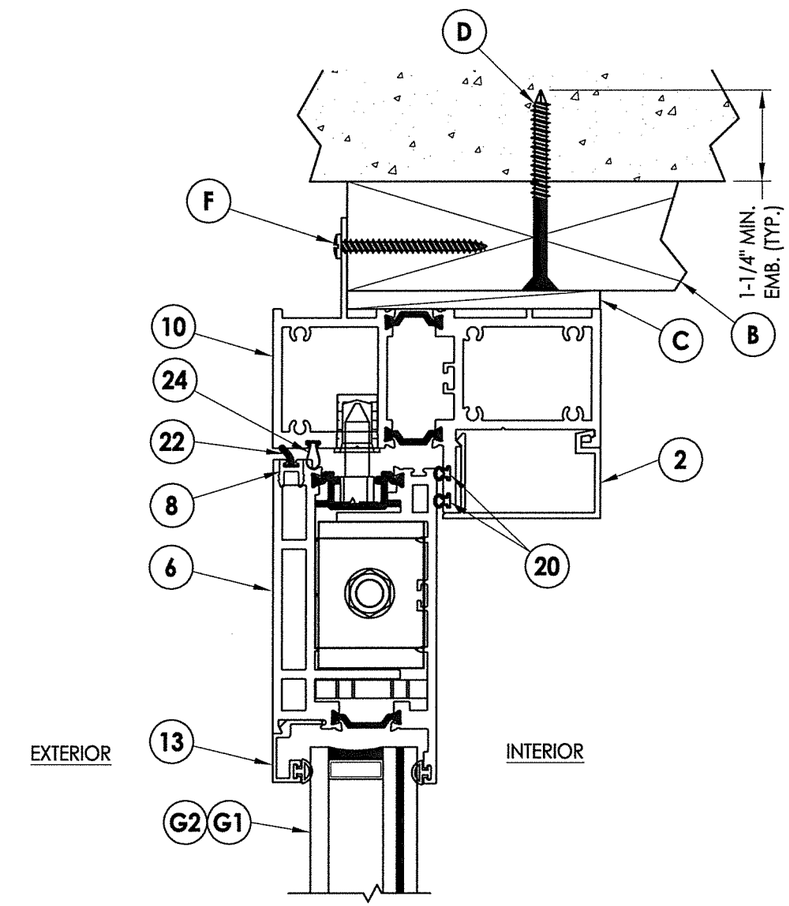

2/3 **VERTICAL CROSS SECTION**
Outswing shown

L. F. SCHMIDT
LICENSE
No. 43409
STATE OF FLORIDA
PROFESSIONAL ENGINEER

December 14, 2020

Documents Prepared By:
Lyndon F. Schmidt
P.E. No. 43409

BUILDING CONSULTANTS, INC.
P.O. Box 230, Valrico, FL 33595
Phone No.: 813.659.9197
FBPE Registry No. 9813

PRODUCT:
FLEETWOOD WINDOWS & DOORS

PART OR ASSEMBLY:
VERTICAL
CROSS SECTIONS

NO.	DATE	REVISIONS	BY

DATE: 12/7/20
SCALE: N.T.S.
DWG. BY: RW
CHK. BY: LFS
DRAWING NO.: FL-17954.8
SHEET 3 OF 7

© 2020 R.W. BUILDING CONSULTANTS INC.

Z:\Clients\Fleetwood PERMANENT\A - Florida Product Approvals\FL-17954 Side Hinged Door\C - Drawings\FL 17954 (2020)\FL-17954.8.dwg

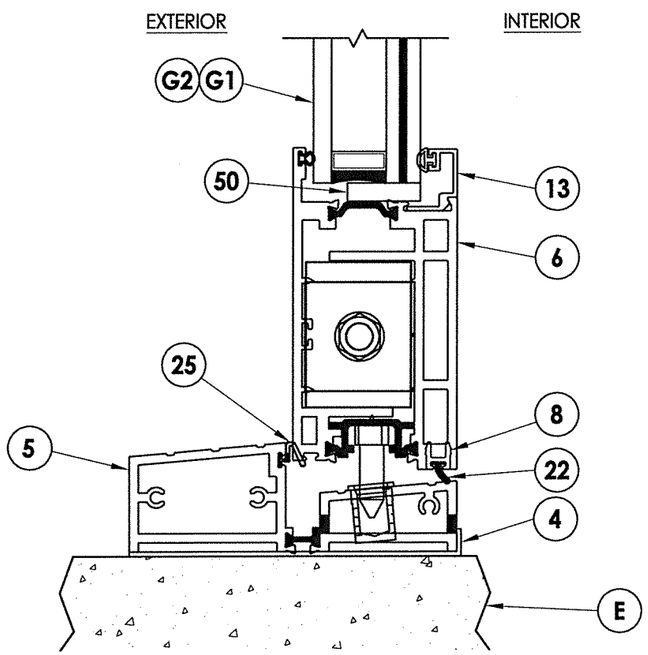

1/4 **VERTICAL CROSS SECTION**
Inswing Shown

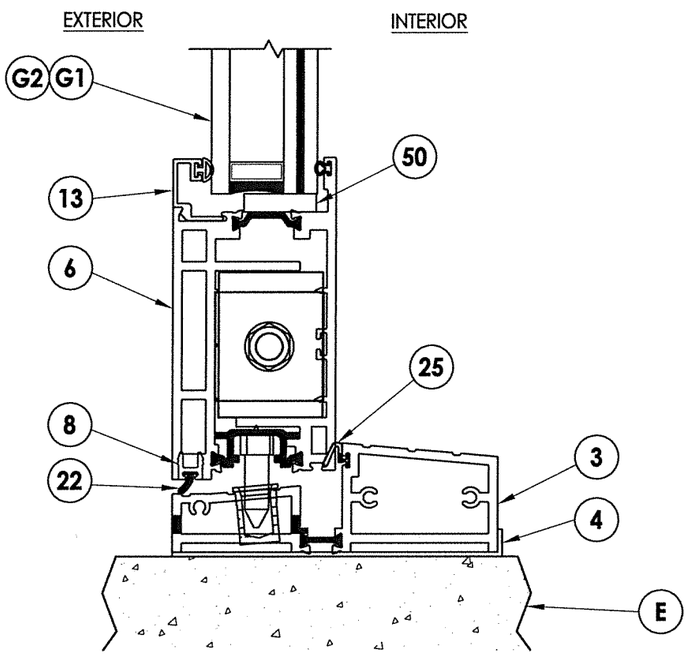

2/4 **VERTICAL CROSS SECTION**
Outswing Shown

L. F. SCHMIDT
LICENSE
No. 43409
STATE OF FLORIDA
PROFESSIONAL ENGINEER

December 14, 2020
Documents Prepared By:
Lyndon F. Schmidt
P.E. No. 43409

RW BUILDING CONSULTANTS, INC.
P.O. Box 230, Valrico, FL 33595
Phone No.: 813.659.9197
FBPE Registry No. 9813

FLEETWOOD WINDOWS & DOORS

PART OR ASSEMBLY:
VERTICAL
CROSS SECTIONS

REVISIONS

NO.	DATE

DATE: 12/7/20
SCALE: N.T.S.
DWG. BY: RW
CHK. BY: LFS
DRAWING NO.: FL-17954.8
SHEET 4 OF 7

© 2020 R.W. BUILDING CONSULTANTS INC.

Z:\Clients\Fleetwood PERMANENT\A - Florida Product Approvals\FL-17954 Side Hinged Door\C - Drawings\FL 17954 (2020)\FL-17954.8.dwg

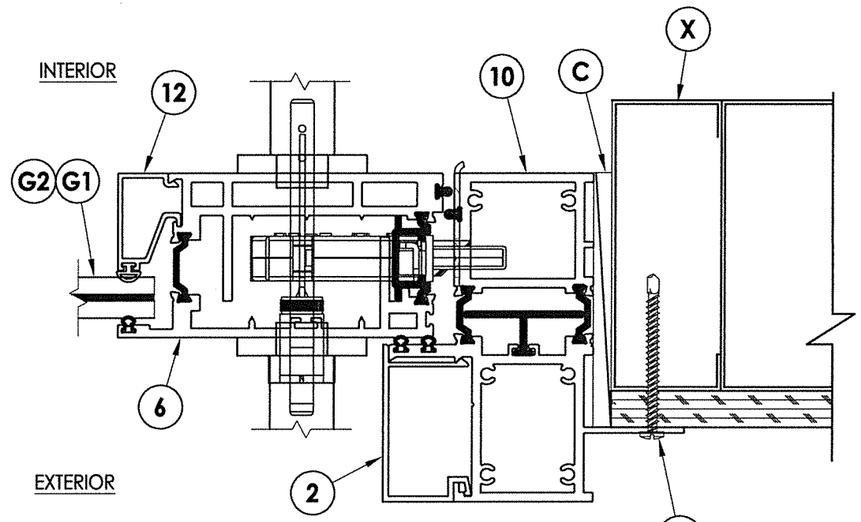

NOTE: Sheet Metal Screws must penetrate a min. of 3 threads through metal stud.

3/5 HORIZONTAL CROSS SECTION
Steel Stud Construction
Inswing shown

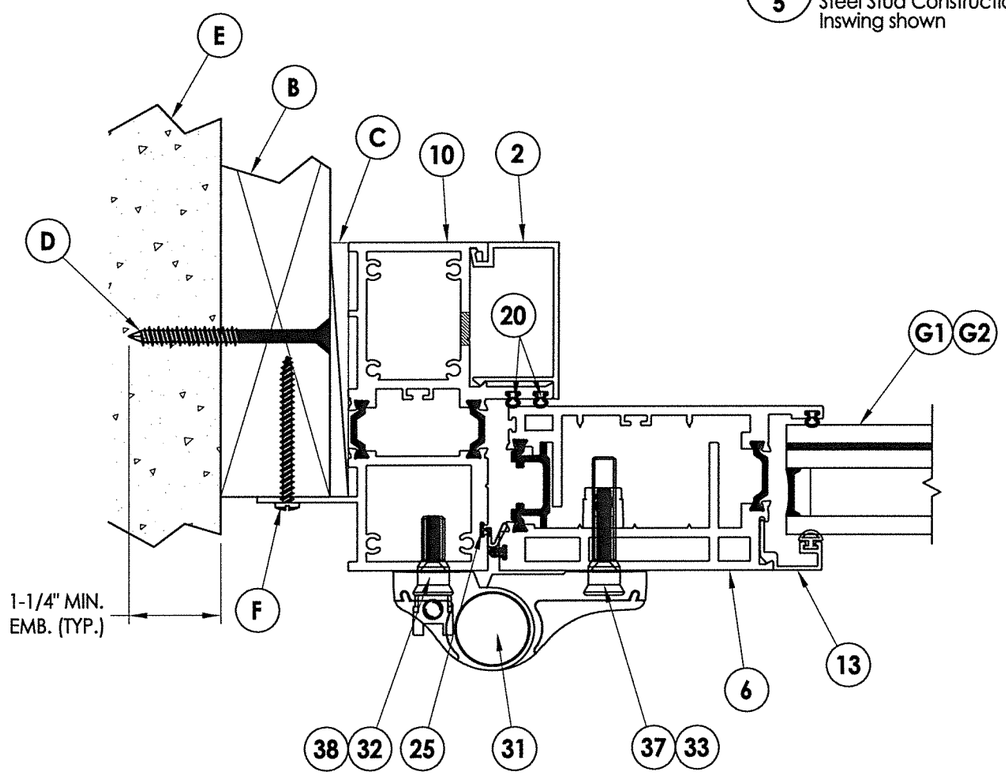

1/5 HORIZONTAL CROSS SECTION
2X Buck Construction
Outswing Shown (Inswing Similar)

INTERIOR

EXTERIOR

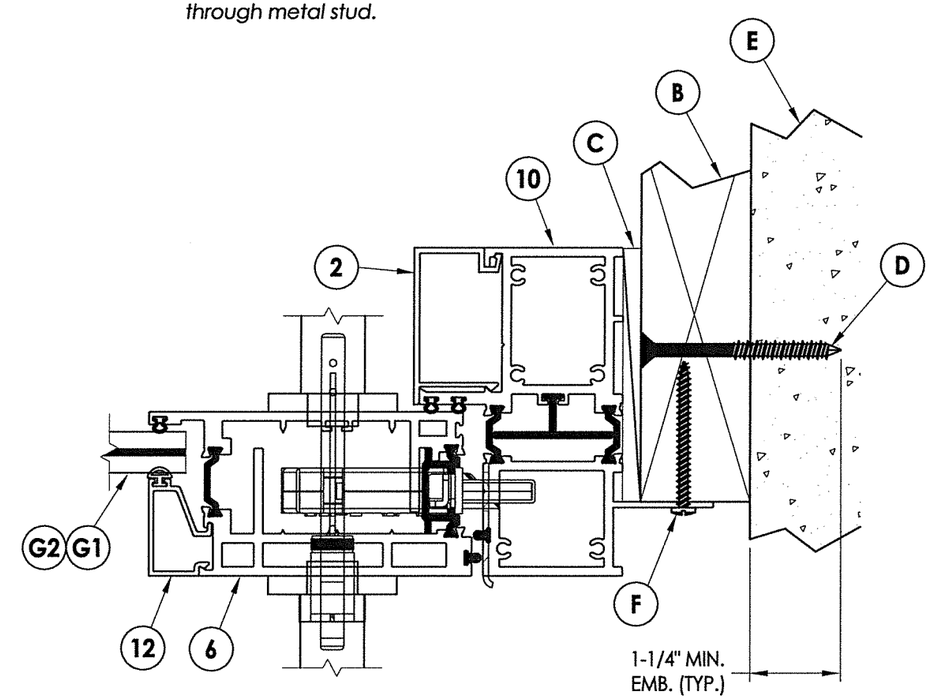

2/5 HORIZONTAL CROSS SECTION
2X Buck Construction
Outswing Shown (Inswing Similar)

L. F. SCHMIDT
LICENSE
No. 43409
STATE OF FLORIDA
PROFESSIONAL ENGINEER

December 14, 2020
Documents Prepared By:
Lyndon F. Schmidt
P.E. No. 43409

RW BUILDING CONSULTANTS, INC.
P.O. Box 230, Valrico, FL 33595
Phone No.: 813.659.9197
FBPE Registry No. 9813

FLEETWOOD WINDOWS & DOORS

PART OR ASSEMBLY:
HORIZONTAL CROSS SECTIONS

REVISIONS

NO.	DATE

DATE: 12/7/20
SCALE: N.T.S.
DWG. BY: RW
CHK. BY: LFS
DRAWING NO.: FL-17954.8
SHEET 5 OF 7

© 2020 R.W. BUILDING CONSULTANTS INC.

Z:\Clients\Fleetwood PERMANENT\A - Florida Product Approvals\FL-17954 Side Hinged Door\C - Drawings\FL 17954 (2020)\FL-17954.8.dwg

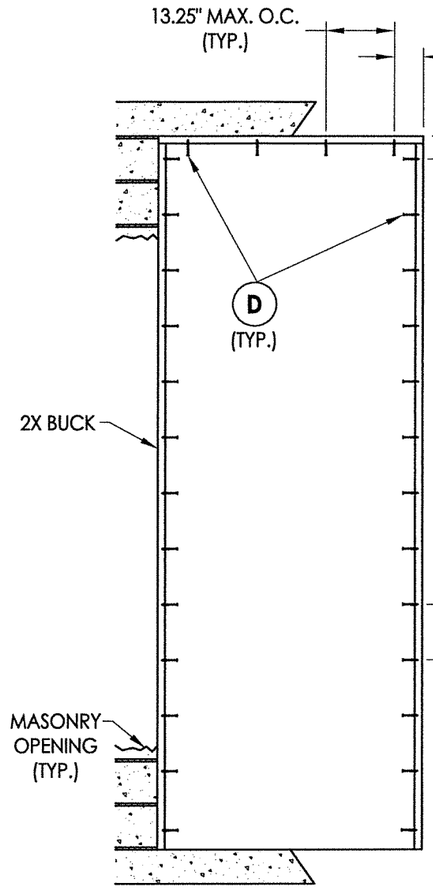

2X BUCK ANCHORING

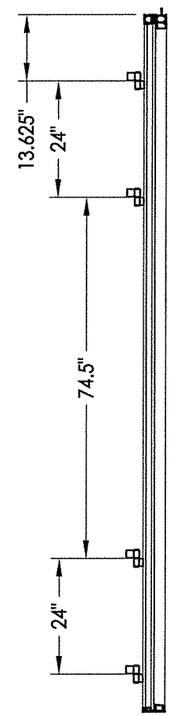

HINGE DETAIL

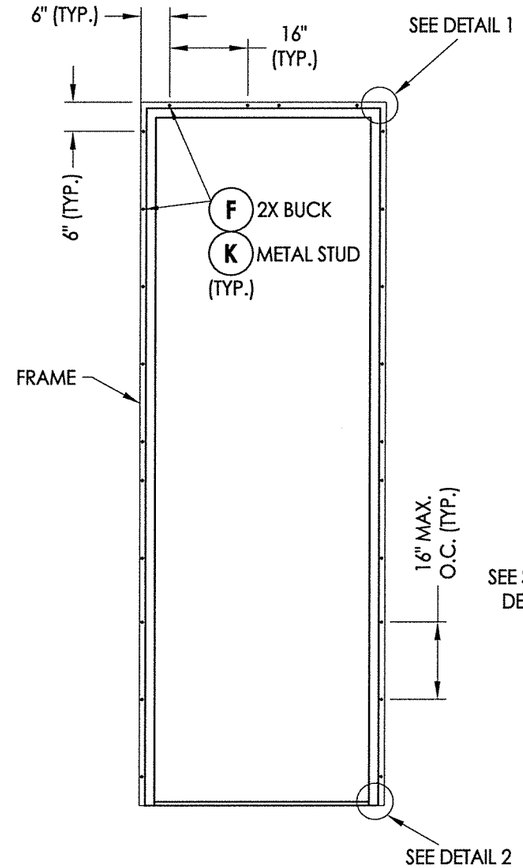

FRAME ANCHORING

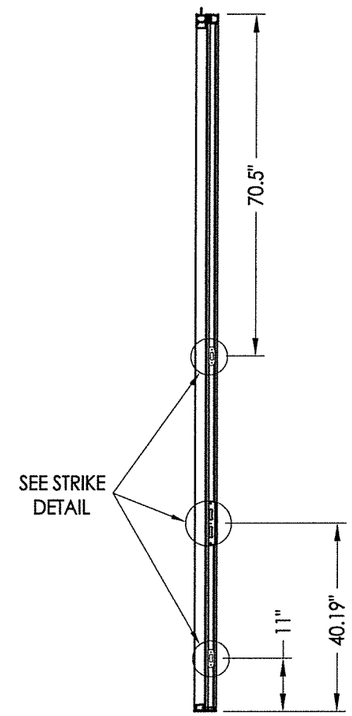

STRIKE JAMB
Fuhr Lock

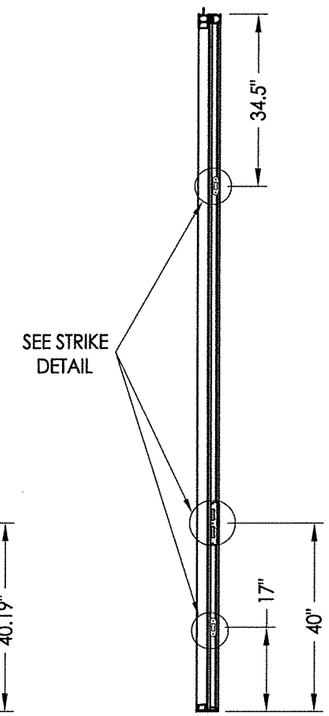

STRIKE JAMB
Truth Lock

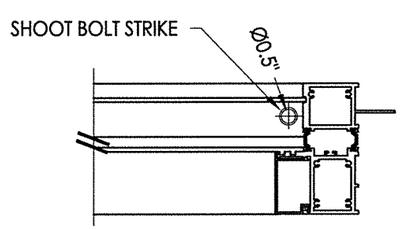

DETAIL 1
Outswing Shown (Inswing Similar)

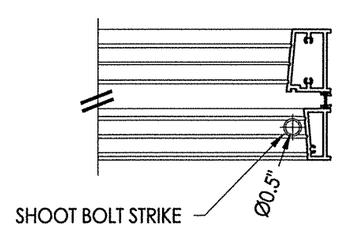

DETAIL 2
Outswing Shown (Inswing Similar)

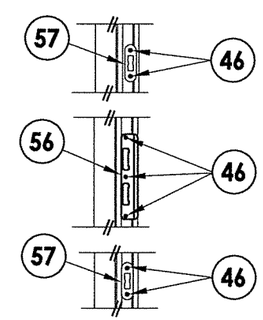

STRIKE DETAIL

LYNDON F. SCHMIDT
LICENSE
No. 43409
STATE OF FLORIDA
PROFESSIONAL ENGINEER

December 14, 2020

Documents Prepared By:
Lyndon F. Schmidt
P.E. No. 43409

RW BUILDING CONSULTANTS, INC.
P.O. Box 230, Valrico, FL 33595
Phone No.: 813.659.9197
FBPE Registry No. 9813

PRODUCT:
FLEETWOOD WINDOWS & DOORS

PART OR ASSEMBLY:
BUCK & FRAME ANCHORING

NO.	DATE	REVISIONS	BY

DATE: 12/7/20
SCALE: N.T.S.
DWG. BY: RW
CHK. BY: LFS
DRAWING NO.: FL-17954.8
SHEET 6 OF 7

© 2020 R.W. BUILDING CONSULTANTS INC.

Z:\Clients\Fleetwood PERMANENT\A - Florida Product Approvals\FL-17954 Side Hinged Door\C - Drawings\FL 17954 (2020)\FL-17954.8.dwg

BILL OF MATERIALS

ITEM #	DESCRIPTION	MATERIAL - MANUFACTURER
B	2X BUCK (SG >= 0.55)	WOOD
C	1/4" MAX. SHIM SPACE	-
D	1/4" X 2-3/4" DeWALT OR ITW PFH CONCRETE SCREW	STEEL
E	MASONRY - 3,000 PSI MIN. CONCRETE CONFORMING TO ACI 301 OR HOLLOW BLOCK CONFORMING TO ASTM C90	CONCRETE
F	#10 X 2" PPH WOOD SCREW (1-1/2" MIN. EMBEDMENT)	STEEL
K	#10 FH SELF-DRILLING SMS	STEEL
X	STEEL STUD Min. Thk .033" (ASTM A653 GRADE 33 Fy=33 Ksi Min, Fu=45 Ksi Min)	STEEL
2	FRAME SNAP-IN	6063-T6 ALUM
3	OUTSWING SILL	6063-T6 ALUM
4	SILL PAN	6063-T6 ALUM
5	INSWING SILL	6063-T6 ALUM
6	SASH	6063-T6 ALUM
8	ATLANTIC SEAL CLIP	6063-T6 ALUM
10	FRAME (FIN)	6063-T6 ALUM
12	9/16" GLASS STOP	6063-T6 ALUM
13	1-1/2" GLASS STOP	6063-T6 ALUM
20	BULB VINYL - MINI (EPDM 70 Durometer)	TREMCO, # TX20801E
21	BULB VINYL - LARGE (EPDM 70 Durometer)	TREMCO, # TX19638E
22	FOAM SEAL	EMESBURY, # 32390
23	Q-LON FOAM SEAL	SCHLEGEL CORP., # Q225T190
24	Q-LON FOAM SEAL	SCHLEGEL CORP., # Q375T190
25	Q-LON FOAM SEAL	SCHLEGEL CORP., # QEZ 376
31	BUTT HINGE	SAVIO
32	BACK UP KIT	SAVIO
33	HINGE BOLT, 8M X 48MM (FOR PANEL)	SAVIO
36	BACK UP PLATE FOR CORNER BLOCK	-
37	MACHINE SCREW NO 10-32, FHP 1.125"	STAINLESS STEEL
38	MACHINE SCREW NO 10-32, FHP .75"	STAINLESS STEEL
39	HEX HEAD CAP SCREW .375-16, 2.250"	STAINLESS STEEL
40	.375-16 SS. HEX NUT	STAINLESS STEEL
41	.375 SPLIT LOCK WASHER	STAINLESS STEEL
46	#10 X 1/2" PFH SMS	STAINLESS STEEL
50	4" LONG SETTING BLOCK	-
56	LATCH AND DEADBOLT STRIKE PLATE	STAINLESS STEEL
57	STRIKE PLATE	STAINLESS STEEL

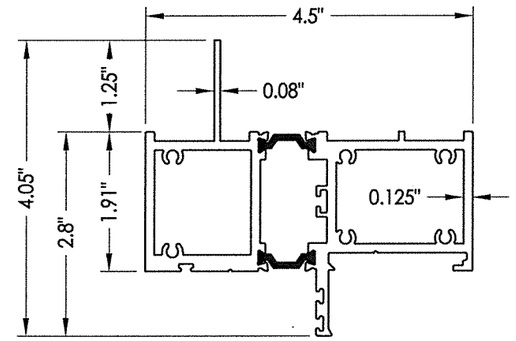

10 FRAME (FIN) OUTSWING

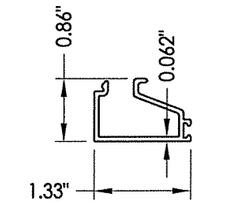

12 9/16" GLASS STOP

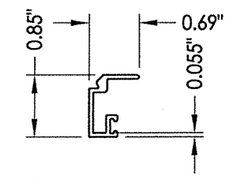

13 1-1/2" GLASS STOP

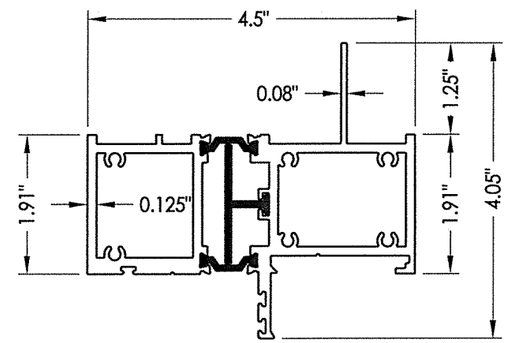

10 FRAME (FIN) INSWING

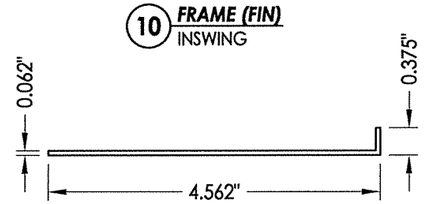

4 SILL PAN

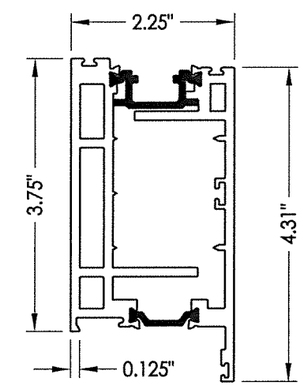

6 SASH

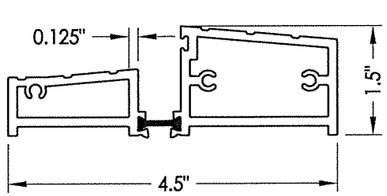

3 OUTSWING SILL

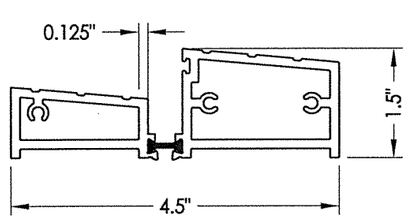

5 INSWING SILL

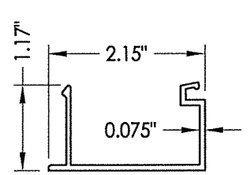

2 FRAME SNAP-IN

CONCRETE ANCHOR NOTES:

1. Concrete anchor locations at the corners may be adjusted to maintain the min. edge distance to mortar joints.
2. Concrete anchor locations noted as "MAX. ON CENTER" must be adjusted to maintain the min. edge distance to mortar joints, additional concrete anchors may be required to ensure the "MAX. ON CENTER" dimension are not exceeded.
3. Concrete anchor table:

ANCHOR TYPE	ANCHOR SIZE	MIN. EMBEDMENT	MIN. CLEARANCE TO MASONRY EDGE	MIN. CLEARANCE TO ADJACENT ANCHOR
ITW TAPCON®	1/4"	1-1/4"	2"	4"
DeWALT ULTRACON+®	1/4"	1-1/4"	1"	4"

WOOD SCREW INSTALLATION NOTES:

1. Maintain a minimum 5/8" edge distance, 1" end distance, & 1" o.c. spacing of wood screws to prevent the splitting of wood.

L. F. SCHMIDT LICENSE No. 43409 STATE OF FLORIDA PROFESSIONAL ENGINEER

December 14, 2020

Documents Prepared By:
Lyndon F. Schmidt
P.E. No. 43409

R.W. BUILDING CONSULTANTS, INC.
P.O. Box 230, Valrico, FL 33595
Phone No.: 813.659.9197
FBPE Registry No. 9813

PRODUCT: FLEETWOOD WINDOWS & DOORS

PART OR ASSEMBLY: BILL OF MATERIALS & COMPONENTS

NO.	DATE	BY	REVISIONS

DATE: 12/7/20
SCALE: N.T.S.
DWG. BY: RW
CHK. BY: LFS
DRAWING NO.: FL-17954.8
SHEET 7 OF 7

© 2020 R.W. BUILDING CONSULTANTS INC.

Z:\Clients\Fleetwood PERMANENT\A - Florida Product Approvals\FL-17954 Side Hinged Door\C - Drawings\FL 17954 (2020)\FL-17954.8.dwg