Oldcastle BuildingEnvelope®

FG-5750T STORMMAX® STOREFRONT
THERMAL IGU IMPACT STOREFRONT SYSTEM
LARGE AND SMALL MISSILE (WET AND DRY GLAZED)
FOR HIGH VELOCITY HURRICANE ZONES

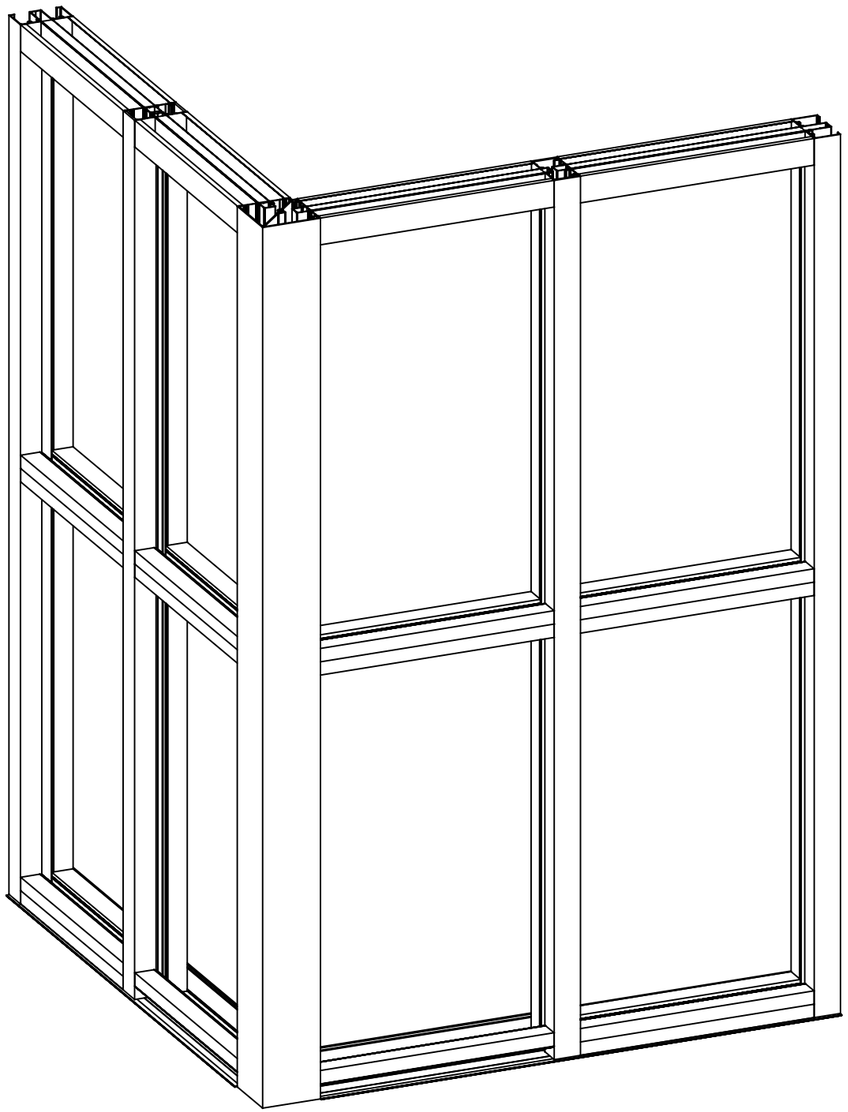

Frank Bennardo
PE# 0046549 CA# 9885

AUGUST 31, 2022

FRANK L. BENNARDO LICENSE No 0046549 STATE OF FLORIDA PROFESSIONAL ENGINEER

Digitally signed by Frank Bennardo
Reason: Printed copies of this document are not considered signed and sealed; The signature must be verified on any electronic copies.
Date: 2022.08.31 16:07:44 -04'00'

GENERAL NOTES:

1. THIS SYSTEM AND GLASS TYPES DESCRIBED HEREIN COMPLY AND HAVE BEEN DESIGNED AND TESTED IN ACCORDANCE WITH THE FLORIDA BUILDING CODE SEVENTH EDITION (2020) PER
a. ASTM E330-14, E331-00, E283-04
b. TAS 201 / 202 / 203
c. AAMA 501-5
d. ANSI Z97.1-2015 (400 ft-lb. IMPACT)
e. ALUMINUM DESIGN MANUAL 2015, ASCE 7-16

2. SITE-SPECIFIC REQUIRED DESIGN PRESSURES SHALL BE CALCULATED BY A LICENSED PROFESSIONAL ENGINEER FOR USE WITH THIS DOCUMENT PER CURRENT ADOPTED EDITION OF ASCE 7 AND WITH LOCAL CODE REQUIREMENTS.

3. FOR USE WITHIN AND OUTSIDE THE HIGH VELOCITY HURRICANE ZONE (HVHZ).

4. DESIGN PRESSURES NOTED HEREIN ARE BASED ON MAXIMUM TESTED PRESSURES DIVIDED BY A 1.5 SAFETY FACTOR.

5. NO 33-1/3%%% INCREASE IN ALLOWABLE STRESS HAS BEEN USED IN THE DESIGN OF THIS SYSTEM. WIND LOAD DURATION FACTOR Cd=1.6 HAS BEEN USED FOR WOOD ANCHOR DESIGN.

6. THE ARCHITECT/ENGINEER OF RECORD FOR THE PROJECT SUPERSTRUCTURE WITH WHICH THIS DESIGN IS USED SHALL BE RESPONSIBLE FOR THE INTEGRITY OF ALL SUPPORTING SURFACES TO THIS DESIGN WHICH SHALL BE COORDINATED BY THE PERMITTING CONTRACTOR.WOOD BUCKS (BY OTHERS) SHALL BE ANCHORED PROPERLY TO TRANSFER LOADS TO THE EXISTING STRUCTURE.

7. THE SYSTEM DETAILED HEREIN IS GENERIC AND DOES NOT PROVIDE INFORMATION FOR A SPECIFIC SITE. FOR SITE CONDITIONS DIFFERENT FROM THE CONDITIONS DETAILED HEREIN, A LICENSED ENGINEER OR REGISTERED ARCHITECT SHALL PREPARE SITE SPECIFIC DOCUMENTS FOR USE IN CONJUNCTION WITH THIS DOCUMENT.

8. THE CONTRACTOR IS RESPONSIBLE TO INSULATE ALL MEMBERS FROM DISSIMILAR MATERIALS TO PREVENT ELECTROLYSIS.

9. FASTENERS SHALL BE CADMIUM-PLATED OR OTHERWISE CORROSION-RESISTANT MATERIAL AND SHALL COMPLY WITH "SPECIFICATIONS FOR ALUMINUM STRUCTURES" SECTION J.3.7.2 BY THE ALUMINUM ASSOCIATION, INC., & ANY APPLICABLE FEDERAL, STATE, AND/OR LOCAL CODES

10. ENGINEER SEAL AFFIXED HERE TO VALIDATES STRUCTURAL DESIGN AS SHOWN ONLY. USE OF THIS SPECIFICATION BY CONTRACTOR, et. al. INDEMNIFIES & SAVES HARMLESS THIS ENGINEER FOR ALL COST & DAMAGES INCLUDING LEGAL FEES & APPELLATE FEES RESULTING FROM MATERIAL FABRICATION, SYSTEM ERECTION, & CONSTRUCTION PRACTICES BEYOND THAT WHICH IS CALLED FOR BY LOCAL, STATE, & FEDERAL CODES & FROM DEVIATIONS OF THIS PLAN.

11. EXCEPT AS EXPRESSLY PROVIDED HEREIN, NO ADDITIONAL CERTIFICATIONS OR AFFIRMATIONS ARE INTENDED.

12. PRESSURE VALUES ON THIS APPROVAL ARE (ASD) ALLOWABLE DESIGN PRESSURES.

13. ALTERATIONS, ADDITIONS, OR OTHER MARKINGS TO THIS DOCUMENT ARE NOT PERMITTED AND INVALIDATE THIS CERTIFICATION.

14. SAFEGUARDS MUST BE OBSERVED (NOT IN THIS CERTIFICATION)

15. PRODUCT SHALL BE PERMANENTLY LABELED WITH A MINIMUM OF ONE LABEL PER SYSTEM CONTAINING THE FOLLOWING:

Oldcastle BuildingEnvelope®
803 AIRPORT ROAD
TERRELL, TEXAS 75160
TAS 201/202/203

SHEET INDEX

# SHEET	DESCRIPTION
01	COVER SHEET
02-03	ELEVATIONS
04-05	GLAZING DETAILS
06-11	GLASS LOADING TABLES
12	MULLION & JAMB LOADING DETERMINATION
13-16	MULLION LOADING CHARTS
17-29	FASTENER SCHEDULE AND ANCHOR CHARTS
30-36	STANDARD FRAMING DETAILS
37-39	PART DRAWINGS
40-41	BILL OF MATERIALS
41	TOTAL

DESIGN PRESSURE

WATER INFILTRATION 15 PSF
AIR INFILTRATION 6.24 PSF
MAXIMUM DESIGN PRESSURE = +/- 75 PSF

ALL ALUMINUM EXTRUSIONS SHALL BE MADE FROM 6063-T6 ALLOY AND TEMPER.

THIS PRODUCT HAS BEEN DESIGNED, ENGINEERED AND TESTED TO COMPLY WITH CURRENT FLORIDA BUILDING CODE.

MATERIALS, INCLUDING BUT NOT LIMITED TO STEEL SCREWS, THAT COME IN CONTACT WITH OTHER DISSIMILAR MATERIALS SHALL MEET THE REQUIREMENTS OF CURRENT FLORIDA BUILDING CODE.

VISIT ECALC.IO/2029229h

FOR HELPFUL RESOURCES, SITE SPECIFIC JOB ORDERING & MORE INFORMATION ABOUT THIS PRODUCT & RELATED SERVICES

SCAN HERE:

FL#20665.3

ENGINEERING EXPRESS®
POSTAL ADDRESS:
401 W. ATLANTIC AVE R10 #219
DELRAY BEACH, FL 33444
ENGINEERINGEXPRESS.COM

OLDCASTLE BUILDING ENVELOPE®
803 AIRPORT ROAD
TERRELL, TX 75160
(972) 551-6100

FG-5750 STOREMAX® THERMAL IMPACT STOREFRONT SYSTEM WET & DRY GLAZED

REMARKS	DRWN	CHKD	DATE
INIT ISSUE	JEM	AJP	07/23/20
REVISIONS	SSQ	RS	03/11/22
-	-	-	-
-	-	-	-
-	-	-	-

COPYRIGHT ENGINEERING EXPRESS®

20-29229g

SCALE: NTS UNLESS NOTED

8/31/2022 2:17 PM SAM c:\users\sam\engineering express\production - documents\projects\20-\20-29229 oldcastle - fg 5000 & fg 5100\revision order 8879\work\drawings & cad\fg-5750t\20-29229g obe - fg-5750tg 8-24-22.dwg

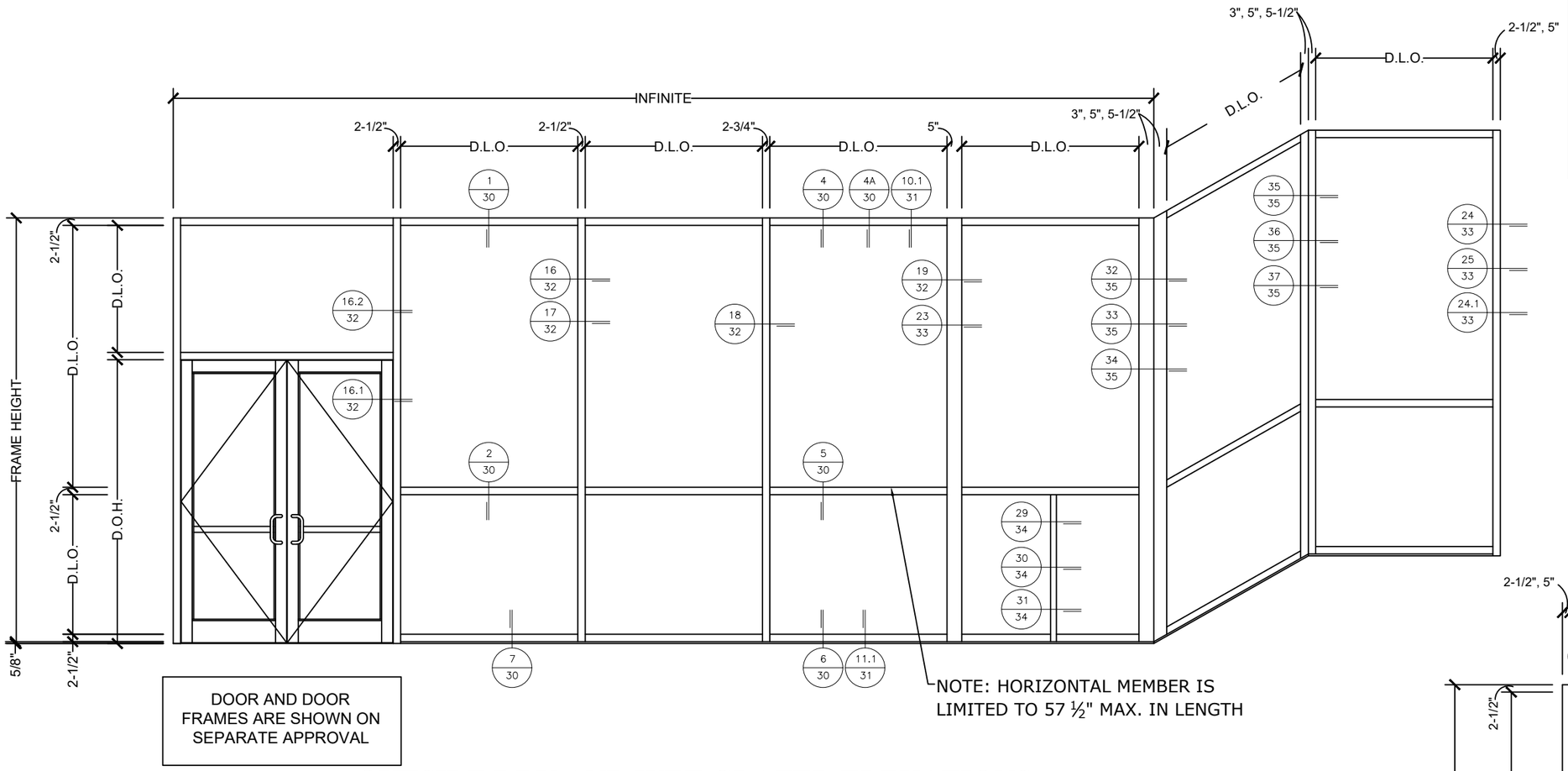

DOOR AND DOOR FRAMES ARE SHOWN ON SEPARATE APPROVAL

OUTSIDE DRY AND WET GLAZED ELEVATIONS (DEPICTED WITH FGT-5712 SUB SILL)

INSTRUCTIONS TO DETERMINE DESIGN PRESSURE RATING

STEP (1): USE THE GLASS LOADING TABLES TO DETERMINE THE ALLOWABLE PRESSURE OF THE GLASS.

STEP (2): USE THE MULLION LOADING TABLE TO DETERMINE THE ALLOWABLE PRESSURES FOR THE MULLIONS
NOTE: TO DETERMINE THE LOADS OF THE MULLIONS, SEE DIAGRAM ON PAGE 12

STEP (3): THE MINIMUM VALUE BETWEEN STEP (1) AND STEP (2) WILL DETERMINE THE DESIGN LOAD PRESSURE FOR THE STOREFRONT SYSTEM.

STEP (4): LESSER OF SILL / HEAD ALLOWABLE PRESSURE (PAGES 30-31) AND FASTENER SCHEDULE (PAGES 17-26) MUST MEET OR EXCEED DESIGN LOAD PRESSURE FOR THE STOREFRONT SYSTEM.

DOORS ARE SHOWN BY SEPARATE APPROVAL
LESSER PRESSURE WILL PREVAIL ON COMBINED PRODUCTS
MINIMUM SHIM SPACE REQUIRED 1/4", MAXIMUM SHIM SPACE 1/2"

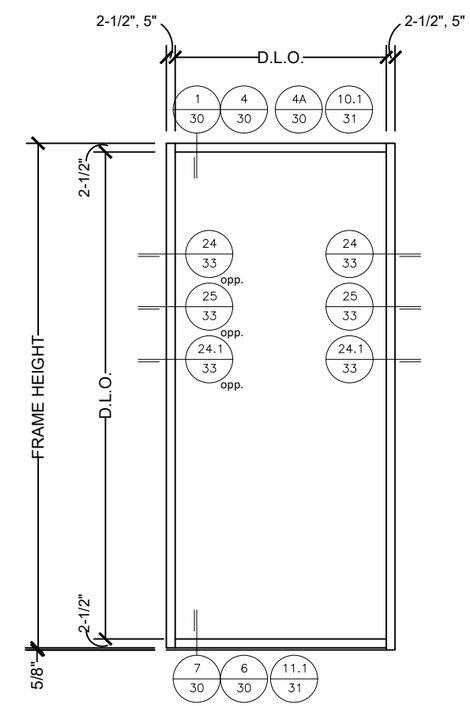

TYPICAL SINGLE PANEL OPENING

FRAME SIZE FOR SINGLE OPENINGS SHALL BE GOVERNED BY THE MAXIMUM ALLOWABLE D.L.O. DIMENSIONS DISPLAYED ON THE GLASS CHARTS

Frank Bennardo
PE# 0046549 CA# 9885

AUGUST 31, 2022

FRANK L. BENNARDO LICENSE No. PE0046549 STATE OF FLORIDA PROFESSIONAL ENGINEER

FL#20665.3

ENGINEERING EXPRESS®
POSTAL ADDRESS:
401 W. ATLANTIC AVE R10 #219
DELRAY BEACH, FL 33444
ENGINEERINGEXPRESS.COM

OLDCASTLE BUILDING ENVELOPE®
803 AIRPORT ROAD
TERRELL, TX 75160
(972) 551-6100

FG-5750 STOREMAX® THERMAL IMPACT STOREFRONT SYSTEM WET & DRY GLAZED

REMARKS	DRWN	CHKD	DATE
INIT ISSUE	JEM	AJP	07/23/20
REVISIONS	SSQ	RS	03/11/22
-	-	-	-
-	-	-	-
-	-	-	-

COPYRIGHT ENGINEERING EXPRESS®

20-29229g

SCALE: NTS UNLESS NOTED

c:\users\sam\engineering express\production - documents\projects\20-20-29229 oldcastle - fg 5000 & fg 5100\revision order 8879\work\drawings & cad\fg-5750t\20-29229g obe - fg-5750tg 8-24-22.dwg
8/31/2022 2:17 PM SAM

c:\users\sam\engineering express\production - documents\projects\20-\20-29229 oldcastle - fg 5000 & fg 5100\revision order 8879\work\drawings & cad\fg-5750t\20-29229g obe - fg-5750tg 8-24-22.dwg
8/31/2022 2:17 PM SAM

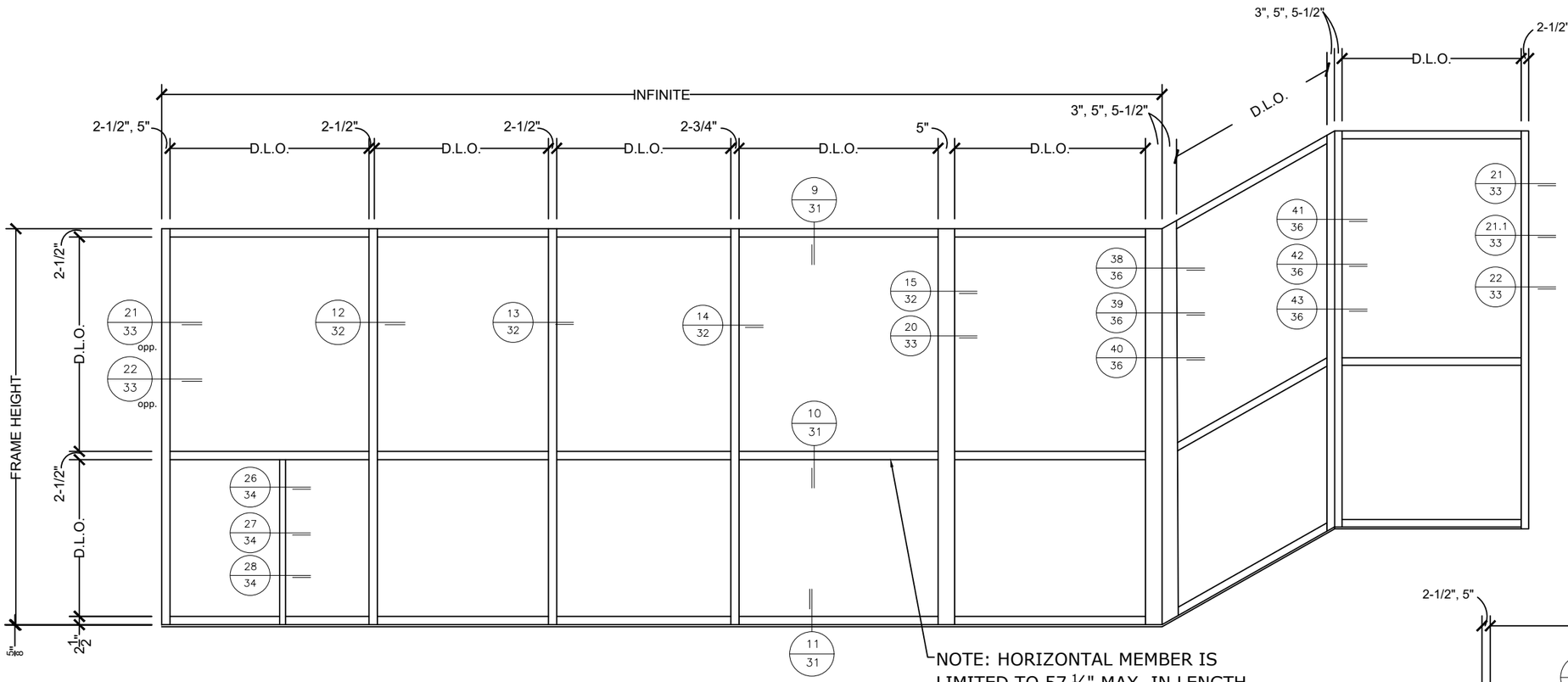

NOTE: HORIZONTAL MEMBER IS LIMITED TO 57 ½" MAX. IN LENGTH

INSIDE DRY GLAZED ELEVATIONS (DEPICTED WITH FGT-5712 SUB SILL) (LARGE & SMALL MISSILE IMPACT)

INSTRUCTIONS TO DETERMINE DESIGN PRESSURE RATING

STEP (1): USE THE GLASS LOADING TABLES TO DETERMINE THE ALLOWABLE PRESSURE OF THE GLASS.

STEP (2): USE THE MULLION LOADING TABLE TO DETERMINE THE ALLOWABLE PRESSURES FOR THE MULLIONS
NOTE: TO DETERMINE THE LOADS OF THE MULLIONS, SEE DIAGRAM ON PAGE 12

STEP (3): THE MINIMUM VALUE BETWEEN STEP (1) AND STEP (2) WILL DETERMINE THE DESIGN LOAD PRESSURE FOR THE STOREFRONT SYSTEM.

STEP (4): LESSER OF SILL / HEAD ALLOWABLE PRESSURE (PAGES 27-28) AND FASTENER SCHEDULE (PAGES 17-26) MUST MEET OR EXCEED DESIGN LOAD PRESSURE FOR THE STOREFRONT SYSTEM.

DOORS ARE SHOWN BY SEPARATE APPROVAL
LESSER PRESSURE WILL PREVAIL ON COMBINED PRODUCTS
MINIMUM SHIM SPACE REQUIRED 1/4", MAXIMUM SHIM SPACE 1/2"

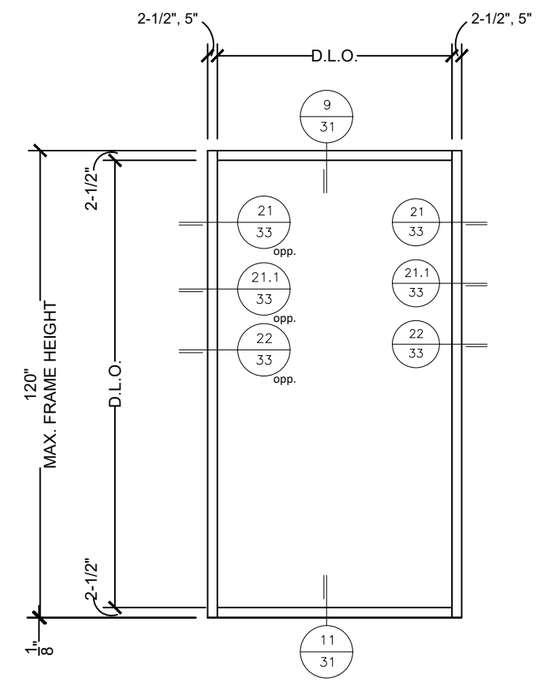

TYPICAL SINGLE PANEL OPENING

FRAME SIZE FOR SINGLE OPENINGS SHALL BE GOVERNED BY THE MAXIMUM ALLOWABLE D.L.O. DIMENSIONS DISPLAYED ON THE GLASS CHARTS

Frank Bennardo
PE# 0046549 CA# 9885

AUGUST 31, 2022

FRANK L. BENNARDO LICENSE No. PE0046549 STATE OF FLORIDA PROFESSIONAL ENGINEER

FL#20665.3

ENGINEERING EXPRESS®
POSTAL ADDRESS:
401 W. ATLANTIC AVE R10 #219
DELRAY BEACH, FL 33444
ENGINEERINGEXPRESS.COM

OLDCASTLE BUILDING ENVELOPE®
803 AIRPORT ROAD
TERRELL, TX 75160
(972) 551-6100

FG-5750 STOREMAX® THERMAL IMPACT STOREFRONT SYSTEM WET & DRY GLAZED

REMARKS	DRWN	CHKD	DATE
INIT ISSUE	JEM	AJP	07/23/20
REVISIONS	SSQ	RS	03/11/22
-	-	-	-
-	-	-	-
-	-	-	-

COPYRIGHT ENGINEERING EXPRESS®

20-29229g

SCALE: NTS UNLESS NOTED

GLASS TYPES (L.M.I.) OUTSIDE GLAZED - MISSILE LEVEL "D"

Frank Bennardo
PE# 0046549 CA# 9885

AUGUST 31, 2022

FRANK L. BENNARDO LICENSE No. PE0046549 STATE OF FLORIDA PROFESSIONAL ENGINEER

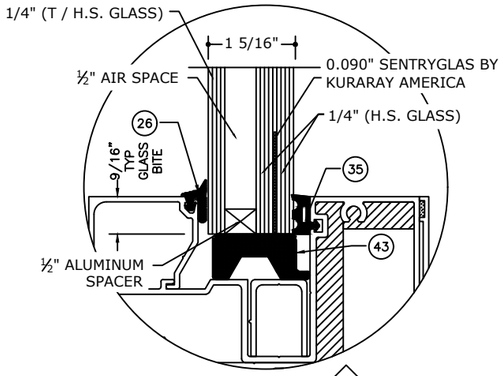

GLASS TYPE G1

GLAZING DETAIL (DRY GLAZED)

N.T.S.

GLASS RATING:

LARGE MISSILE LEVEL D
1 5/16" GLASS

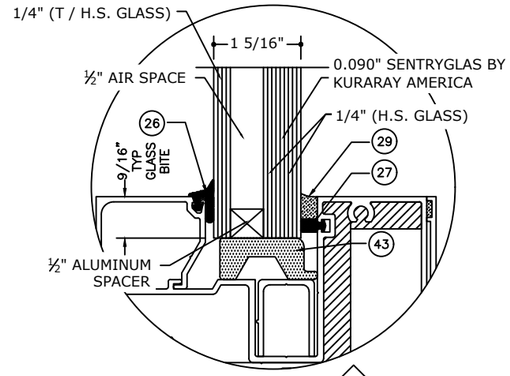

GLASS TYPE G2

GLAZING DETAIL (WET GLAZED)

N.T.S.

GLASS RATING:

LARGE MISSILE LEVEL D
1 5/16" GLASS

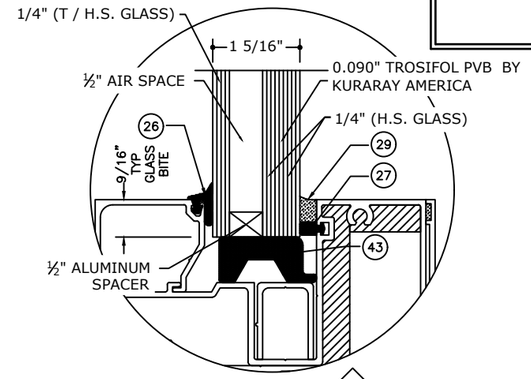

GLASS TYPE G3

GLAZING DETAIL (WET GLAZED)

N.T.S.

GLASS RATING:

LARGE MISSILE LEVEL D
1 5/16" GLASS

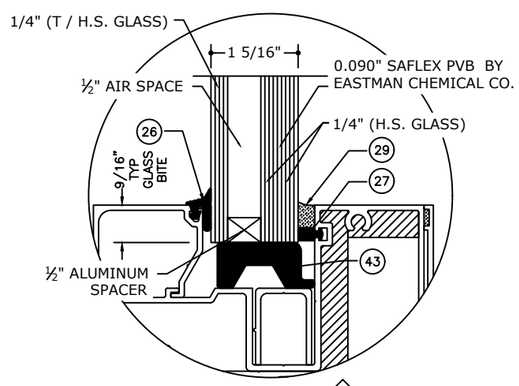

GLASS TYPE G4

GLAZING DETAIL (WET GLAZED)

N.T.S.

GLASS RATING:

LARGE MISSILE LEVEL D
1 5/16" GLASS

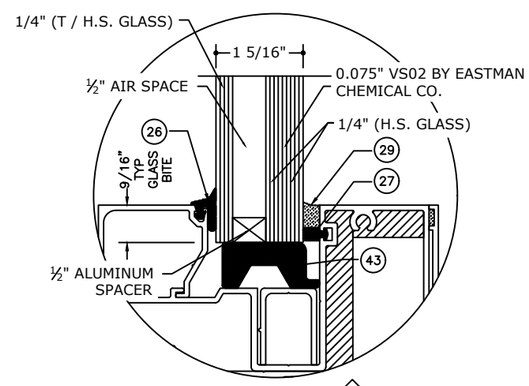

GLASS TYPE G5

GLAZING DETAIL (WET GLAZED)

N.T.S.

GLASS RATING:

LARGE MISSILE LEVEL D
1 5/16" GLASS

NOTE: GLAZING TYPE COMPLIES WITH ASTM E1300 REQUIREMENTS.

FL#20665.3

ENGINEERING EXPRESS®
POSTAL ADDRESS:
401 W. ATLANTIC AVE R10 #219
DELRAY BEACH, FL 33444
ENGINEERINGEXPRESS.COM

OLDCASTLE BUILDING ENVELOPE®
803 AIRPORT ROAD
TERRELL, TX 75160
(972) 551-6100

FG-5750 STOREMAX® THERMAL IMPACT STOREFRONT SYSTEM WET & DRY GLAZED

REMARKS	DRWN	CHKD	DATE
INIT ISSUE	JEM	AJP	07/23/20
REVISIONS	SSQ	RS	03/11/22
-	-	-	-
-	-	-	-
-	-	-	-

COPYRIGHT ENGINEERING EXPRESS®

20-29229g

SCALE: NTS UNLESS NOTED

c:\users\sam\engineering express\production - documents\projects\20-20-29229 oldcastle - fg 5000 & fg 5100\revision order 8879\work\drawings & cad\fg-5750t\20-29229g obe - fg-5750tg 8-24-22.dwg
8/31/2022 2:17 PM SAM

GLASS TYPE (L.M.I. AND S.M.I.) - INSIDE GLAZED

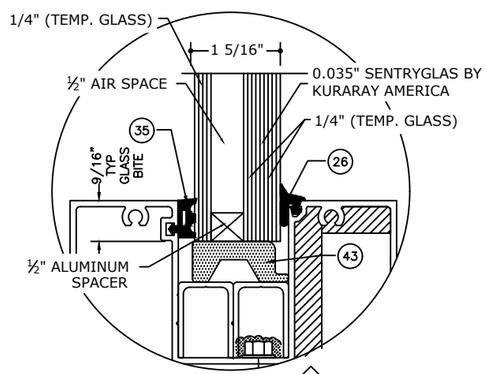

GLASS TYPE G6

GLAZING DETAIL (DRY GLAZED)

N.T.S.

GLASS RATING:

SMALL MISSILE
1 5/16" GLASS

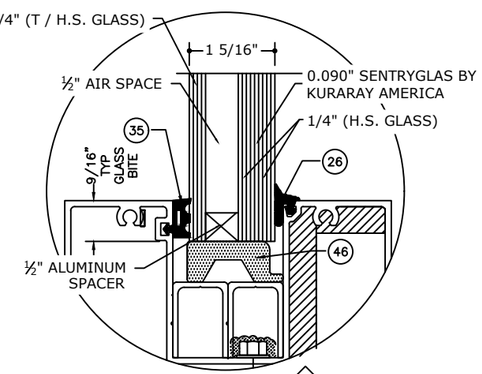

GLASS TYPE G7

GLAZING DETAIL (DRY GLAZED)

N.T.S.

GLASS RATING:

LARGE MISSILE LEVEL D
1 5/16" GLASS

NOTE: GLAZING TYPE COMPLIES WITH ASTM E1300 REQUIREMENTS.

Frank Bennardo
PE# 0046549 CA# 9885

AUGUST 31, 2022

FRANK L. BENNARDO LICENSE No. PE0046549 STATE OF FLORIDA PROFESSIONAL ENGINEER

FL#20665.3

ENGINEERING EXPRESS®
POSTAL ADDRESS:
401 W. ATLANTIC AVE R10 #219
DELRAY BEACH, FL 33444
ENGINEERINGEXPRESS.COM

OLDCASTLE BUILDING ENVELOPE®
803 AIRPORT ROAD
TERRELL, TX 75160
(972) 551-6100

FG-5750 STOREMAX® THERMAL IMPACT STOREFRONT SYSTEM WET & DRY GLAZED

REMARKS	DRWN	CHKD	DATE
INIT ISSUE	JEM	AJP	07/23/20
REVISIONS	SSQ	RS	03/11/22
-	-	-	-
-	-	-	-
-	-	-	-

COPYRIGHT ENGINEERING EXPRESS®

20-29229g

SCALE: NTS UNLESS NOTED

8/31/2022 2:17 PM SAM c:\users\sam\engineering express\production - documents\projects\20-\20-29229 oldcastle - fg 5000 & fg 5100\revision order 8879\work\drawings & cad\fg-5750t\20-29229g obe - fg-5750tg 8-24-22.dwg

GLASS LOADING TABLES (L.M.I.)

GLASS TYPES		G1 G7		G2		G3		G4		G5	
		ALLOWABLE PRESSURE		ALLOWABLE PRESSURE		ALLOWABLE PRESSURE		ALLOWABLE PRESSURE		ALLOWABLE PRESSURE	
D.L.O. HEIGHT (in)	D.L.O. WIDTH (in)	*(+) P.S.F*	*(-) P.S.F*	*(+) P.S.F*	*(-) P.S.F*	*(+) P.S.F*	*(-) P.S.F*	*(+) P.S.F*	*(-) P.S.F*	*(+) P.S.F*	*(-) P.S.F*
42	24	75	75	75	75	55	55	70	80	90	90
	30	75	75	75	75	55	55	70	80	90	90
	36	75	75	75	75	55	55	70	80	90	90
	42	75	75	75	75	55	55	67	77	90	90
	46	75	75	75	75	55	55	67	77	90	90
	48	75	75	75	75	55	55	67	77	90	90
	54	75	75	75	75	55	55	67	77	90	90
	57 1/2	75	75	75	75	55	55	67	77	90	90
	60	75	75	75	75	55	55	67	77	90	90
	66	75	75	75	75	55	55	67	77	90	90
	72	75	75	75	75	55	55	67	77	90	90
	78	75	75	75	75	55	55	67	77	90	90
48	24	75	75	75	75	55	55	70	80	90	90
	30	75	75	75	75	55	55	70	80	90	90
	36	75	75	75	75	55	55	70	80	90	90
	42	75	75	75	75	55	55	67	77	90	90
	46	75	75	75	75	55	55	61	70	90	90
	48	75	75	75	75	52	52	59	67	90	90
	54	75	75	75	75	52	52	59	67	90	90
	57 1/2	75	75	75	75	52	52	59	67	90	90
	60	75	75	75	75	52	52	59	67	90	90
	66	75	75	75	75	52	52	59	67	90	90
	72	75	75	75	75	52	52	59	67	90	90
	78	75	75	75	75	52	52	59	67	90	90
54	24	75	75	75	75	55	55	70	80	90	90
	30	75	75	75	75	55	55	70	80	90	90
	36	75	75	75	75	55	55	70	80	90	90
	42	75	75	75	75	55	55	67	77	90	90
	46	75	75	75	75	55	55	61	70	90	90
	48	75	75	75	75	52	52	59	67	90	90
	54	75	75	75	75	46	46	52	60	90	90
	57 1/2	75	75	75	75	46	46	52	60	90	90
	60	75	75	75	75	46	46	52	60	90	90
	66	75	75	75	75	46	46	52	60	90	90
	72	75	75	75	75	-	-	52	60	90	90
	78	75	75	75	75	-	-	52	60	90	90
60	24	75	75	75	75	55	55	70	80	90	90
	30	75	75	75	75	55	55	70	80	90	90
	36	75	75	75	75	55	55	70	80	90	90
	42	75	75	75	75	55	55	67	77	90	90
	46	75	75	75	75	55	55	61	70	90	90
	48	75	75	75	75	52	52	59	67	90	90
	54	75	75	75	75	46	46	52	60	90	90
	57 1/2	75	75	75	75	44	44	49	56	90	90
	60	67	67	67	67	42	42	47	54	86	86
	66	67	67	67	67	-	-	47	54	86	86
	72	67	67	67	67	-	-	47	54	86	86
	78	67	67	67	67	-	-	-	-	86	86

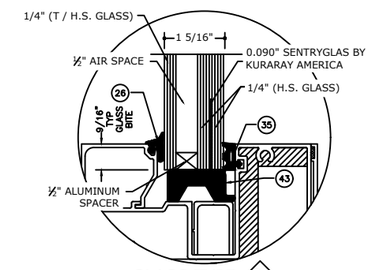

GLASS TYPE G1

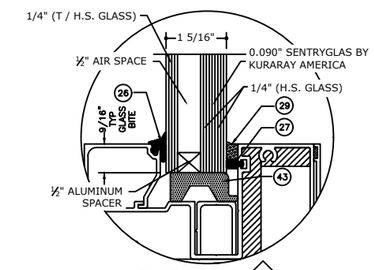

GLASS TYPE G2

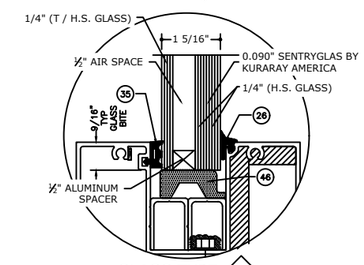

GLASS TYPE G7

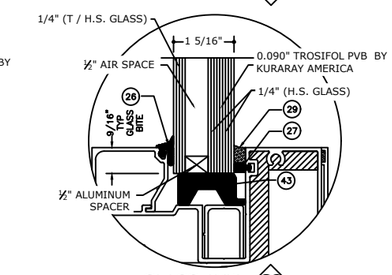

GLASS TYPE G3

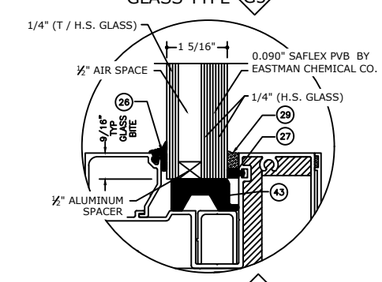

GLASS TYPE G4

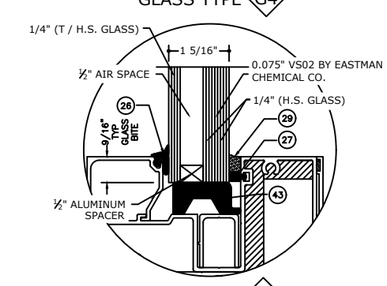

GLASS TYPE G5

Frank Bennardo
PE# 0046549 CA# 9885

AUGUST 31, 2022

FRANK L. BENNARDO LICENSE No. PE0046549 STATE OF FLORIDA PROFESSIONAL ENGINEER

FL#20665.3

ENGINEERING EXPRESS®
POSTAL ADDRESS:
401 W. ATLANTIC AVE R10 #219
DELRAY BEACH, FL 33444
ENGINEERINGEXPRESS.COM

OLDCASTLE BUILDING ENVELOPE®
803 AIRPORT ROAD
TERRELL, TX 75160
(972) 551-6100

FG-5750 STOREMAX® THERMAL IMPACT STOREFRONT SYSTEM WET & DRY GLAZED

REMARKS	DRWN	CHKD	DATE
INIT ISSUE	JEM	AJP	07/23/20
REVISIONS	SSQ	RS	03/11/22
-	-	-	-
-	-	-	-
-	-	-	-

COPYRIGHT ENGINEERING EXPRESS®

20-29229g

SCALE: NTS UNLESS NOTED

8/31/2022 2:17 PM SAM c:\users\sam\engineering express\production - documents\projects\20-\20-29229 oldcastle - fg 5000 & fg 5100\revision order 8879\work\drawings & cad\fg-5750t\20-29229g obe - fg-5750tg 8-24-22.dwg

GLASS LOADING TABLES (L.M.I.)

GLASS TYPES		G1 G7		G2		G3		G4		G5	
		ALLOWABLE PRESSURE		ALLOWABLE PRESSURE		ALLOWABLE PRESSURE		ALLOWABLE PRESSURE		ALLOWABLE PRESSURE	
D.L.O. HEIGHT (in)	D.L.O. WIDTH (in)	*(+) P.S.F*	*(-) P.S.F*	*(+) P.S.F*	*(-) P.S.F*	*(+) P.S.F*	*(-) P.S.F*	*(+) P.S.F*	*(-) P.S.F*	*(+) P.S.F*	*(-) P.S.F*
66	24	75	75	75	75	55	55	70	80	90	90
	30	75	75	75	75	55	55	70	80	90	90
	36	75	75	75	75	55	55	70	80	90	90
	42	75	75	75	75	55	55	67	77	90	90
	46	75	75	75	75	55	55	61	70	90	90
	48	75	75	75	75	52	52	59	67	90	90
	54	75	75	75	75	46	46	52	60	90	90
	57 1/2	75	75	75	75	44	44	49	56	90	90
	60	67	67	67	67	-	-	47	54	86	86
	66	60	60	60	60	-	-	42	49	78	78
	72	60	60	60	60	-	-	-	-	78	78
	78	60	60	60	60	-	-	-	-	78	78
72	24	75	75	75	75	55	55	70	80	90	90
	30	75	75	75	75	55	55	70	80	90	90
	36	75	75	75	75	55	55	70	80	90	90
	42	75	75	75	75	55	55	67	77	90	90
	46	75	75	75	75	55	55	61	70	90	90
	48	75	75	75	75	52	52	59	67	90	90
	54	75	75	75	75	-	-	52	60	90	90
	57 1/2	75	75	75	75	-	-	49	56	90	90
	60	67	67	67	67	-	-	47	54	86	86
	66	60	60	60	60	-	-	-	-	78	78
	72	55	55	55	55	-	-	-	-	71	71
	78	-	-	-	-	-	-	-	-	71	71
78	24	75	75	75	75	55	55	70	80	90	90
	30	75	75	75	75	55	55	70	80	90	90
	36	75	75	75	75	55	55	70	80	90	90
	42	75	75	75	75	55	55	67	77	90	90
	46	75	75	75	75	55	55	61	70	90	90
	48	75	75	75	75	52	52	59	67	90	90
	54	75	75	75	75	-	-	52	60	90	90
	57 1/2	75	75	75	75	-	-	-	-	90	90
	60	67	67	67	67	-	-	-	-	86	86
	66	60	60	60	60	-	-	-	-	78	78
	72	-	-	-	-	-	-	-	-	71	71
	78	-	-	-	-	-	-	-	-	66	66
83	24	75	75	75	75	55	55	70	80	90	90
	30	75	75	75	75	55	55	70	80	90	90
	36	75	75	75	75	55	55	70	80	90	90
	42	75	75	75	75	55	55	67	77	90	90
	46	75	75	75	75	55	55	61	70	90	90
	48	75	75	75	75	-	-	59	67	90	90
	54	75	75	75	75	-	-	-	-	90	90
	57 1/2	75	75	75	75	-	-	-	-	90	90
	60	67	67	67	67	-	-	-	-	86	86
	66	60	60	60	60	-	-	-	-	78	78
	72	-	-	-	-	-	-	-	-	71	71
	78	-	-	-	-	-	-	-	-	66	66

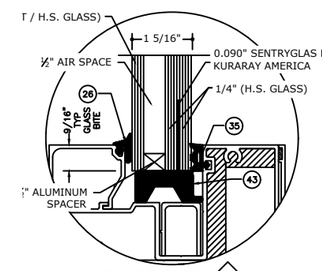

GLASS TYPE G1

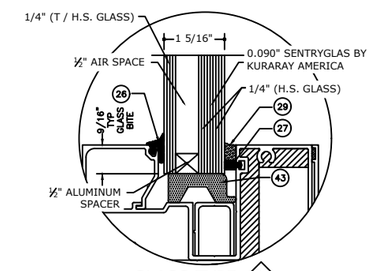

GLASS TYPE G2

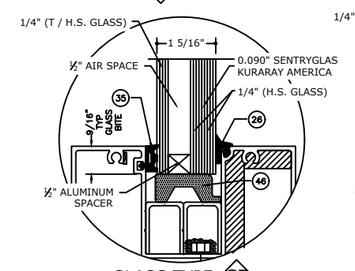

GLASS TYPE G7

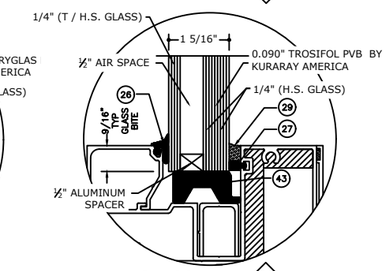

GLASS TYPE G3

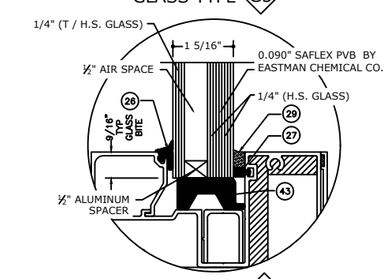

GLASS TYPE G4

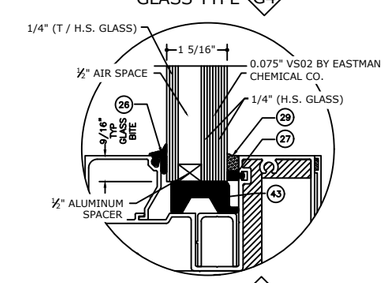

GLASS TYPE G5

Frank Bennardo
PE# 0046549 CA# 9885

AUGUST 31, 2022

FRANK L. BENNARDO LICENSE No. PE0046549 STATE OF FLORIDA PROFESSIONAL ENGINEER

FL#20665.3

ENGINEERING EXPRESS®
POSTAL ADDRESS:
401 W. ATLANTIC AVE R10 #219
DELRAY BEACH, FL 33444
ENGINEERINGEXPRESS.COM

OLDCASTLE BUILDING ENVELOPE®
803 AIRPORT ROAD
TERRELL, TX 75160
(972) 551-6100

FG-5750 STOREMAX® THERMAL IMPACT STOREFRONT SYSTEM WET & DRY GLAZED

REMARKS	DRWN	CHKD	DATE
INIT ISSUE	JEM	AJP	07/23/20
REVISIONS	SSQ	RS	03/11/22
-	-	-	-
-	-	-	-
-	-	-	-

COPYRIGHT ENGINEERING EXPRESS®

20-29229g

SCALE: NTS UNLESS NOTED

8/31/2022 2:17 PM SAM c:\users\sam\engineering express\production - documents\projects\20-20-29229 oldcastle - fg 5000 & fg 5100\revision order 8879\work\drawings & cad\fg-5750t\20-29229g obe - fg-5750tg 8-24-22.dwg

GLASS LOADING TABLES (L.M.I.)

GLASS TYPES		G1 G7		G2		G3		G4		G5	
		ALLOWABLE PRESSURE		ALLOWABLE PRESSURE		ALLOWABLE PRESSURE		ALLOWABLE PRESSURE		ALLOWABLE PRESSURE	
D.L.O. HEIGHT (in)	D.L.O. WIDTH (in)	*(+) P.S.F*	*(-) P.S.F*	*(+) P.S.F*	*(-) P.S.F*	*(+) P.S.F*	*(-) P.S.F*	*(+) P.S.F*	*(-) P.S.F*	*(+) P.S.F*	*(-) P.S.F*
96	24	75	75	75	75	55	55	70	80	90	90
	30	75	75	75	75	55	55	70	80	90	90
	36	75	75	75	75	55	55	70	80	90	90
	42	75	75	75	75	-	-	67	77	90	90
	46	75	75	75	75	-	-	-	-	90	90
	48	75	75	75	75	-	-	-	-	90	90
	54	75	75	75	75	-	-	-	-	90	90
	57 1/2	75	75	75	75	-	-	-	-	90	90
	60	-	-	-	-	-	-	-	-	86	86
	66	-	-	-	-	-	-	-	-	78	78
101	24	75	75	75	75	55	55	70	80	90	90
	30	75	75	75	75	55	55	70	80	90	90
	36	75	75	75	75	55	55	70	80	90	90
	42	75	75	75	75	-	-	67	77	90	90
	46	75	75	75	75	-	-	-	-	90	90
	48	75	75	75	75	-	-	-	-	90	90
	54	75	75	75	75	-	-	-	-	90	90
	57 1/2	-	-	-	-	-	-	-	-	90	90
	60	-	-	-	-	-	-	-	-	86	86
108	24	75	75	75	75	55	55	70	80	90	90
	30	75	75	75	75	55	55	70	80	90	90
	36	75	75	75	75	-	-	70	80	90	90
	42	75	75	75	75	-	-	-	-	90	90
	46	75	75	75	75	-	-	-	-	90	90
	48	75	75	75	75	-	-	-	-	90	90
	54	-	-	-	-	-	-	-	-	90	90
	57 1/2	-	-	-	-	-	-	-	-	90	90
	60	-	-	-	-	-	-	-	-	86	86
115	24	75	75	75	75	55	55	70	80	90	90
	30	75	75	75	75	55	55	70	80	90	90
	36	75	75	75	75	-	-	70	80	90	90
	42	75	75	75	75	-	-	-	-	90	90
	46	75	75	75	75	-	-	-	-	90	90
	48	75	75	75	75	-	-	-	-	90	90
	54	-	-	-	-	-	-	-	-	90	90
	57 1/2	-	-	-	-	-	-	-	-	90	90

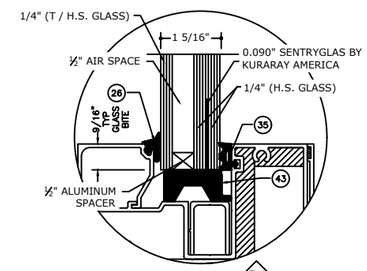

GLASS TYPE G1

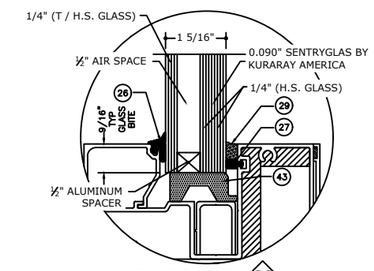

GLASS TYPE G2

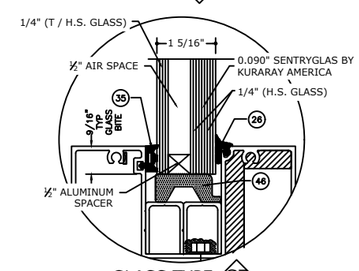

GLASS TYPE G7

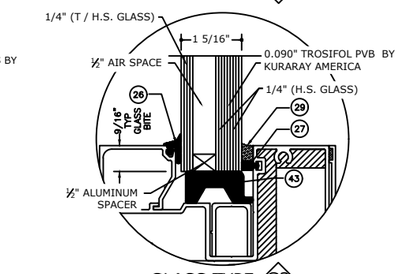

GLASS TYPE G3

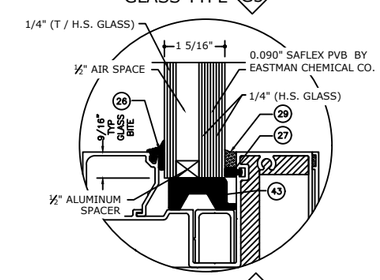

GLASS TYPE G4

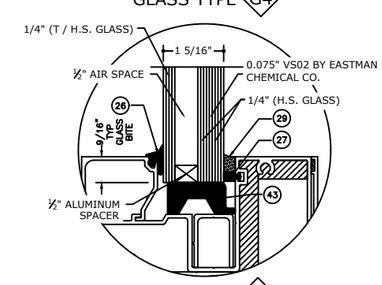

GLASS TYPE G5

Frank Bennardo
PE# 0046549 CA# 9885

AUGUST 31, 2022

FRANK L. BENNARDO LICENSE No. PE0046549 STATE OF FLORIDA PROFESSIONAL ENGINEER

FL#20665.3

ENGINEERING EXPRESS®
POSTAL ADDRESS:
401 W. ATLANTIC AVE R10 #219
DELRAY BEACH, FL 33444
ENGINEERINGEXPRESS.COM

OLDCASTLE BUILDING ENVELOPE®
803 AIRPORT ROAD
TERRELL, TX 75160
(972) 551-6100

FG-5750 STOREMAX® THERMAL IMPACT STOREFRONT SYSTEM WET & DRY GLAZED

REMARKS	DRWN	CHKD	DATE
INIT ISSUE	JEM	AJP	07/23/20
REVISIONS	SSQ	RS	03/11/22
-	-	-	-
-	-	-	-
-	-	-	-

COPYRIGHT ENGINEERING EXPRESS®

20-29229g

SCALE: NTS UNLESS NOTED

8/31/2022 2:17 PM SAM c:\users\sam\engineering express\production - documents\projects\20-\20-29229 oldcastle - fg 5000 & fg 5100\revision order 8879\work\drawings & cad\fg-5750t\20-29229g obe - fg-5750tg 8-24-22.dwg

GLASS LOADING TABLES (L.M.I.)

GLASS TYPES		G1 G7		G2		G3		G4		G5	
		ALLOWABLE PRESSURE		ALLOWABLE PRESSURE		ALLOWABLE PRESSURE		ALLOWABLE PRESSURE		ALLOWABLE PRESSURE	
D.L.O. HEIGHT (in)	D.L.O. WIDTH (in)	*(+) P.S.F*	*(-) P.S.F*	*(+) P.S.F*	*(-) P.S.F*	*(+) P.S.F*	*(-) P.S.F*	*(+) P.S.F*	*(-) P.S.F*	*(+) P.S.F*	*(-) P.S.F*
120	24	75	75	75	75	55	55	70	80	90	90
	30	75	75	75	75	55	55	70	80	90	90
	36	75	75	75	75	-	-	70	80	90	90
	42	75	75	75	75	-	-	-	-	90	90
	46	75	75	75	75	-	-	-	-	90	90
	48	-	-	-	-	-	-	-	-	90	90
	54	-	-	-	-	-	-	-	-	90	90
126	24	75	75	75	75	55	55	70	80	90	90
	30	75	75	75	75	55	55	70	80	90	90
	36	75	75	75	75	-	-	-	-	90	90
	42	75	75	75	75	-	-	-	-	90	90
	46	-	-	-	-	-	-	-	-	90	90
	48	-	-	-	-	-	-	-	-	90	90
132	24	75	75	75	75	55	55	70	80	90	90
	30	75	75	75	75	-	-	70	80	90	90
	36	75	75	75	75	-	-	-	-	90	90
	42	-	-	-	-	-	-	-	-	90	90
	46	-	-	-	-	-	-	-	-	90	90
	48	-	-	-	-	-	-	-	-	90	90
144	24	75	75	75	75	55	55	70	80	90	90
	30	75	75	75	75	-	-	70	80	90	90
	36	75	75	75	75	-	-	-	-	90	90
	42	-	-	-	-	-	-	-	-	90	90

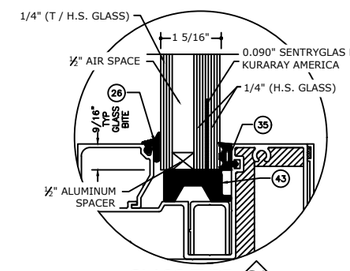

GLASS TYPE G1

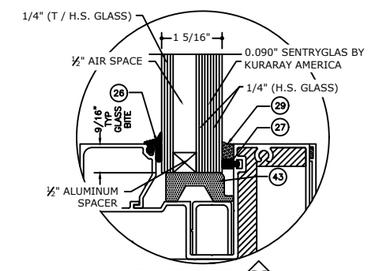

GLASS TYPE G2

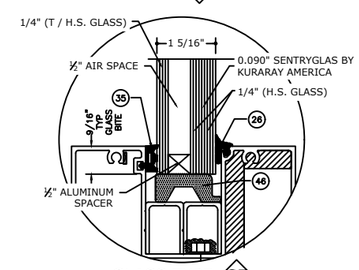

GLASS TYPE G7

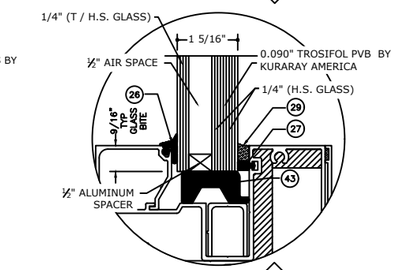

GLASS TYPE G3

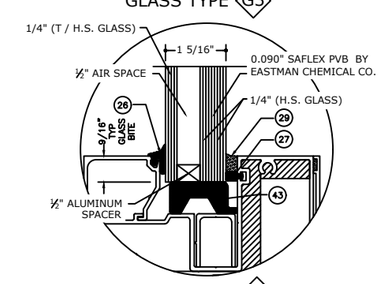

GLASS TYPE G4

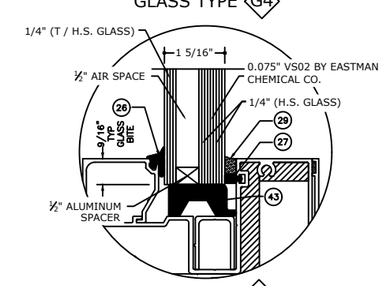

GLASS TYPE G5

Frank Bennardo
PE# 0046549 CA# 9885

AUGUST 31, 2022

FRANK L. BENNARDO LICENSE No. PE0046549 STATE OF FLORIDA PROFESSIONAL ENGINEER

FL#20665.3

ENGINEERING EXPRESS®
POSTAL ADDRESS:
401 W. ATLANTIC AVE R10 #219
DELRAY BEACH, FL 33444
ENGINEERINGEXPRESS.COM

OLDCASTLE BUILDING ENVELOPE®
803 AIRPORT ROAD
TERRELL, TX 75160
(972) 551-6100

FG-5750 STOREMAX® THERMAL IMPACT STOREFRONT SYSTEM WET & DRY GLAZED

REMARKS	DRWN	CHKD	DATE
INIT ISSUE	JEM	AJP	07/23/20
REVISIONS	SSQ	RS	03/11/22
-	-	-	-
-	-	-	-
-	-	-	-

COPYRIGHT ENGINEERING EXPRESS®

20-29229g

SCALE: NTS UNLESS NOTED

8/31/2022 2:17 PM SAM c:\users\sam\engineering express\production - documents\projects\20-\20-29229 oldcastle - fg 5000 & fg 5100\revision order 8879\work\drawings & cad\fg-5750t\20-29229g obe - fg-5750tg 8-24-22.dwg

GLASS LOADING TABLES (S.M.I.)

GLASS TYPES		G6	
		ALLOWABLE PRESSURE	
D.L.O. HEIGHT (in)	D.L.O. WIDTH (in)	*(+) P.S.F*	*(-) P.S.F*
24	24	60	60
	30	60	60
	36	60	60
	42	60	60
	46	60	60
	48	60	60
	54	60	60
	57 1/2	60	60
	60	60	60
	66	60	60
	72	60	60
	78	60	60
30	24	60	60
	30	60	60
	36	60	60
	42	60	60
	46	60	60
	48	60	60
	54	60	60
	57 1/2	60	60
	60	60	60
	66	60	60
	72	60	60
	78	60	60
36	24	60	60
	30	60	60
	36	60	60
	42	60	60
	46	60	60
	48	60	60
	54	60	60
	57 1/2	60	60
	60	60	60
	66	60	60
	72	60	60
	78	60	60
40.5	24	60	60
	30	60	60
	36	60	60
	42	60	60
	46	60	60
	48	60	60
	54	60	60
	57 1/2	60	60
	60	60	60
	66	60	60
	72	60	60
	78	60	60

GLASS TYPES		G6	
		ALLOWABLE PRESSURE	
D.L.O. HEIGHT (in)	D.L.O. WIDTH (in)	*(+) P.S.F*	*(-) P.S.F*
42	24	60	60
	30	60	60
	36	60	60
	42	60	60
	46	60	60
	48	60	60
	54	60	60
	57 1/2	60	60
	60	60	60
	66	60	60
	72	60	60
	78	60	60
48	24	60	60
	30	60	60
	36	60	60
	42	60	60
	46	59	59
	48	57	57
	54	57	57
	57 1/2	57	57
	60	57	57
	66	57	57
	72	57	57
	78	57	57
54	24	60	60
	30	60	60
	36	60	60
	42	60	60
	46	59	59
	48	57	57
	54	51	51
	57 1/2	51	51
	60	51	51
	66	51	51
	72	51	51
	78	51	51
60	24	60	60
	30	60	60
	36	60	60
	42	60	60
	46	59	59
	48	57	57
	54	51	51
	57 1/2	47	47
	60	45	45
	66	45	45
	72	45	45
	78	-	-

GLASS TYPES		G6	
		ALLOWABLE PRESSURE	
D.L.O. HEIGHT (in)	D.L.O. WIDTH (in)	*(+) P.S.F*	*(-) P.S.F*
66	24	60	60
	30	60	60
	36	60	60
	42	60	60
	46	59	59
	48	57	57
	54	51	51
	57 1/2	47	47
	60	45	45
	66	41	41
72	24	60	60
	30	60	60
	36	60	60
	42	60	60
	46	59	59
	48	57	57
	54	51	51
	57 1/2	47	47
	60	45	45
78	24	60	60
	30	60	60
	36	60	60
	42	60	60
	46	59	59
	48	57	57
	54	51	51
	57 1/2	47	47
83	24	60	60
	30	60	60
	36	60	60
	42	60	60
	46	59	59
	48	57	57
	54	51	51

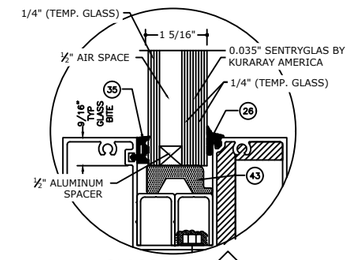

GLASS TYPE G6

Frank Bennardo
PE# 0046549 CA# 9885

AUGUST 31, 2022

FRANK L. BENNARDO LICENSE No. PE0046549 STATE OF FLORIDA PROFESSIONAL ENGINEER

FL#20665.3

ENGINEERING EXPRESS®
POSTAL ADDRESS:
401 W. ATLANTIC AVE R10 #219
DELRAY BEACH, FL 33444
ENGINEERINGEXPRESS.COM

OLDCASTLE BUILDING ENVELOPE®
803 AIRPORT ROAD
TERRELL, TX 75160
(972) 551-6100

FG-5750 STOREMAX® THERMAL
IMPACT STOREFRONT SYSTEM
WET & DRY GLAZED

REMARKS	DRWN	CHKD	DATE
INIT ISSUE	JEM	AJP	07/23/20
REVISIONS	SSQ	RS	03/11/22
-	-	-	-
-	-	-	-
-	-	-	-

COPYRIGHT ENGINEERING EXPRESS®

20-29229g

SCALE: NTS UNLESS NOTED

8/31/2022 2:17 PM SAM c:\users\sam\engineering express\production - documents\projects\20-\20-29229 oldcastle - fg 5000 & fg 5100\revision order 8879\work\drawings & cad\fg-5750t\20-29229g obe - fg-5750tg 8-24-22.dwg

GLASS LOADING TABLES (S.M.I.)

GLASS TYPES		G6	
		ALLOWABLE PRESSURE	
D.L.O. HEIGHT (in)	D.L.O. WIDTH (in)	*(+) P.S.F*	*(-) P.S.F*
96	24	60	60
	30	60	60
	36	60	60
	42	60	60
	46	59	59
	48	57	57
101	24	60	60
	30	60	60
	36	60	60
	42	60	60
	46	60	60
108	24	60	60
	30	60	60
	36	60	60
	42	60	60
115	24	60	60
	30	60	60
	36	60	60

GLASS TYPES		G6	
		ALLOWABLE PRESSURE	
D.L.O. HEIGHT (in)	D.L.O. WIDTH (in)	*(+) P.S.F*	*(-) P.S.F*
120	24	60	60
	30	60	60
	36	60	60
126	24	60	60
	30	60	60
	36	60	60
132	24	60	60
	30	60	60
144	24	60	60
	30	60	60

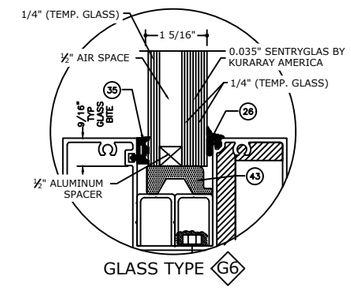

GLASS TYPE G6

Frank Bennardo
PE# 0046549 CA# 9885

AUGUST 31, 2022

FRANK L. BENNARDO LICENSE No. PE0046549 STATE OF FLORIDA PROFESSIONAL ENGINEER

FL#20665.3

ENGINEERING EXPRESS®
POSTAL ADDRESS:
401 W. ATLANTIC AVE R10 #219
DELRAY BEACH, FL 33444
ENGINEERINGEXPRESS.COM

OLDCASTLE BUILDING ENVELOPE®
803 AIRPORT ROAD
TERRELL, TX 75160
(972) 551-6100

FG-5750 STOREMAX® THERMAL
IMPACT STOREFRONT SYSTEM
WET & DRY GLAZED

REMARKS	DRWN	CHKD	DATE
INIT ISSUE	JEM	AJP	07/23/20
REVISIONS	SSQ	RS	03/11/22
-	-	-	-
-	-	-	-
-	-	-	-

COPYRIGHT ENGINEERING EXPRESS®

20-29229g

SCALE: NTS UNLESS NOTED

8/31/2022 2:17 PM SAM c:\users\sam\engineering express\production - documents\projects\20-\20-29229 oldcastle - fg 5000 & fg 5100\revision order 8879\work\drawings & cad\fg-5750t\20-29229g obe - fg-5750tg 8-24-22.dwg

MULLION & JAMB LOAD DETERMINATION

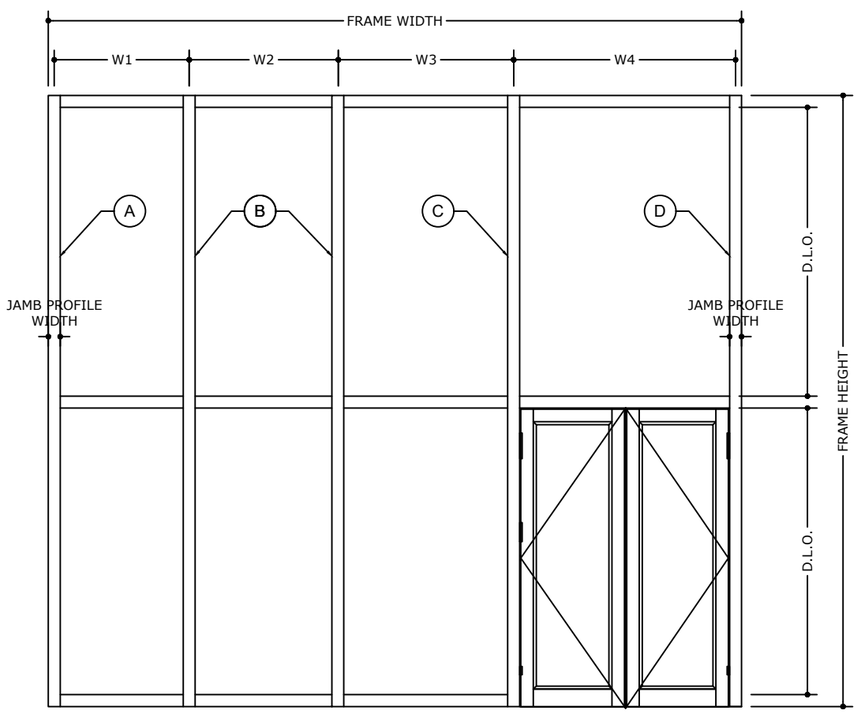

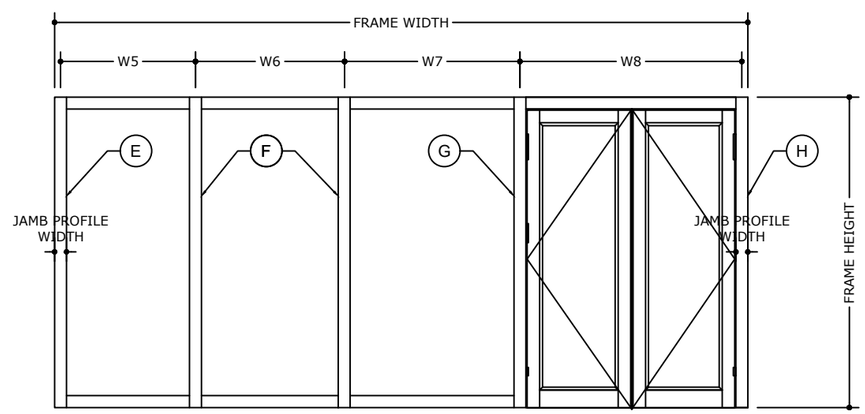

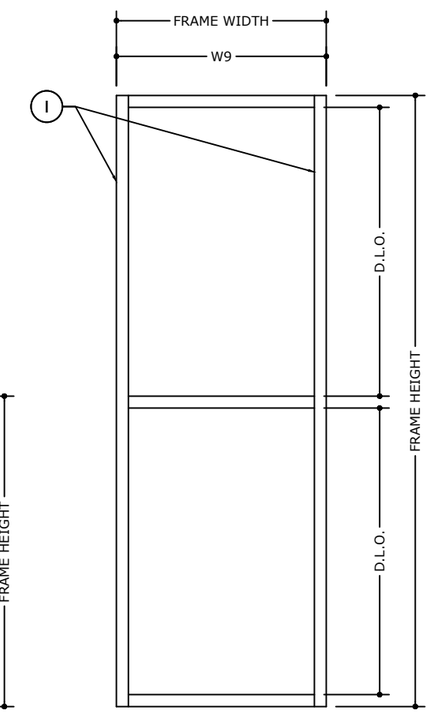

LOAD DETERMINATION

TRIBUTARY WIDTH A = $\frac{W1}{2} + \frac{\text{JAMB PROFILE WIDTH}}{2}$
(FOR STANDARD JAMB MULLION)

TRIBUTARY WIDTH B = LARGER OF $\frac{W1 + W2}{2}$ OR $\frac{W2 + W3}{2}$
(FOR STANDARD MULLION)

TRIBUTARY WIDTH C = $\frac{W3 + W4}{2}$
(FOR INTERMEDIATE DOOR MULLION)

TRIBUTARY WIDTH D = $\frac{W4}{2} + \frac{\text{JAMB PROFILE WIDTH}}{2}$
(FOR DOOR JAMB MULLION)

LOAD DETERMINATION

TRIBUTARY WIDTH E = $\frac{W5}{2} + \frac{\text{JAMB PROFILE WIDTH}}{2}$
(FOR STANDARD JAMB MULLION)

TRIBUTARY WIDTH F = LARGER OF $\frac{W5 + W6}{2}$ OR $\frac{W6 + W7}{2}$
(FOR STANDARD MULLION)

TRIBUTARY WIDTH G = $\frac{W7}{2} + \frac{W8}{4}$
(FOR INTERMEDIATE DOOR MULLION)

TRIBUTARY WIDTH H = $\frac{W8}{4} + \frac{\text{JAMB PROFILE WIDTH}}{2}$
(FOR DOOR JAMB MULLION)

LOAD DETERMINATION

TRIBUTARY WIDTH I = $\frac{W9}{2}$

(FOR STANDARD JAMB MULLION)

A E I	JAMB MULLION
B F	STANDARD MULLION
C G	DOOR JAMB INTERMEDIATE MULLION
D H	DOOR JAMB MULLION

Frank Bennardo
PE# 0046549 CA# 9885

AUGUST 31, 2022

FRANK L. BENNARDO LICENSE No. PE0046549 STATE OF FLORIDA PROFESSIONAL ENGINEER

FL#20665.3

ENGINEERING EXPRESS®
POSTAL ADDRESS:
401 W. ATLANTIC AVE R10 #219
DELRAY BEACH, FL 33444
ENGINEERINGEXPRESS.COM

OLDCASTLE BUILDING ENVELOPE®
803 AIRPORT ROAD
TERRELL, TX 75160
(972) 551-6100

FG-5750 STOREMAX® THERMAL IMPACT STOREFRONT SYSTEM WET & DRY GLAZED

REMARKS	DRWN	CHKD	DATE
INIT ISSUE	JEM	AJP	07/23/20
REVISIONS	SSQ	RS	03/11/22
-	-	-	-
-	-	-	-
-	-	-	-

COPYRIGHT ENGINEERING EXPRESS®

20-29229g

SCALE: NTS UNLESS NOTED

8/31/2022 2:17 PM SAM c:\users\sam\engineering express\production - documents\projects\20-\20-29229 oldcastle - fg 5000 & fg 5100\revision order 8879\work\drawings & cad\fg-5750t\20-29229g obe - fg-5750tg 8-24-22.dwg

MULLION LOADING TABLES (P.S.F.)

SINGLE SPAN MULLION LOADING CHART		MULLION TYPE M1		MULLION TYPE M2		MULLION TYPE M3 - M4		MULLION TYPE M5		MULLION TYPE M6		MULLION TYPE M7	
FRAME HEIGHT (in)	FRAME WIDTH (in)	(+) P.S.F	(-) P.S.F	(+) P.S.F	(-) P.S.F	(+) P.S.F	(-) P.S.F	(+) P.S.F	(-) P.S.F	(+) P.S.F	(-) P.S.F	(+) P.S.F	(-) P.S.F
66	24	70	80	70	70	75	75	70	80	70	70	55	55
	30	70	80	70	70	75	75	70	80	70	70	55	55
	36	70	80	70	70	75	75	70	80	70	70	55	55
	42	70	80	70	70	75	75	70	80	70	70	55	55
	44.75	70	80	70	70	75	75	70	80	70	70	55	55
	48	70	80	70	70	75	75	70	80	70	70	55	55
	54	70	80	70	70	75	75	70	80	70	70	55	55
	60	70	80	70	70	75	75	70	80	70	70	55	55
	66	70	80	70	70	75	75	70	80	70	70	55	55
	72	70	80	70	70	75	75	70	80	70	70	55	55
	78	70	80	70	70	75	75	70	80	70	70	55	55
72	24	70	80	70	70	75	75	70	80	70	70	55	55
	30	70	80	70	70	75	75	70	80	70	70	55	55
	36	70	80	70	70	75	75	70	80	70	70	55	55
	42	70	80	70	70	75	75	70	80	70	70	55	55
	44.75	70	80	70	70	75	75	70	80	70	70	55	55
	48	70	80	70	70	75	75	70	80	70	70	55	55
	54	70	80	70	70	75	75	70	80	70	70	55	55
	60	70	80	70	70	75	75	70	80	70	70	55	55
	66	70	80	70	70	75	75	70	80	70	70	55	55
	72	70	80	70	70	75	75	70	80	70	70	55	55
	78	70	80	-	-	75	75	70	80	70	70	55	55
78	24	70	80	70	70	75	75	70	80	70	70	55	55
	30	70	80	70	70	75	75	70	80	70	70	55	55
	36	70	80	70	70	75	75	70	80	70	70	55	55
	42	70	80	70	70	75	75	70	80	70	70	55	55
	44.75	70	80	70	70	75	75	70	80	70	70	55	55
	48	70	80	70	70	75	75	70	80	70	70	55	55
	54	70	80	70	70	75	75	70	80	70	70	55	55
	60	70	80	70	70	75	75	70	80	70	70	55	55
	66	70	80	70	70	75	75	70	80	70	70	55	55
	72	70	80	-	-	75	75	70	80	70	70	55	55
	78	70	80	-	-	75	75	70	80	70	70	55	55
84	24	70	80	70	70	75	75	70	80	70	70	55	55
	30	70	80	70	70	75	75	70	80	70	70	55	55
	36	70	80	70	70	75	75	70	80	70	70	55	55
	42	70	80	70	70	75	75	70	80	70	70	55	55
	44.75	70	80	70	70	75	75	70	80	70	70	55	55
	48	70	80	70	70	75	75	70	80	70	70	55	55
	54	70	80	70	70	75	75	70	80	70	70	55	55
	60	70	80	70	70	75	75	70	80	70	70	55	55
	66	70	80	-	-	75	75	70	80	70	70	55	55
	72	70	80	-	-	75	75	70	80	70	70	55	55
	78	70	80	-	-	75	75	70	80	70	70	55	55

SINGLE SPAN JAMB LOADING CHART		MULLION TYPE J1	
FRAME HEIGHT (in)	FRAME WIDTH (in)	(+) P.S.F	(-) P.S.F
36	24	90	90
	30	90	90
	36	90	90
	42	90	90
	44.75	90	90
	48	90	90
	54	90	90
	60	90	90
	66	90	90
	72	90	90
48	24	90	90
	30	90	90
	36	90	90
	42	90	90
	44.75	90	90
	48	90	90
	54	90	90
50	24	90	90
	30	90	90
	36	90	90
	42	90	90
	44.75	90	90
	48	90	90
54	24	90	90
	30	90	90
	36	90	90
	42	90	90
	44.75	90	90
	48	90	90
60	24	90	90
	30	90	90
	36	90	90
	42	90	90
64	24	90	90
	30	90	90
	36	90	90
66	24	90	90
	30	90	90
	36	86	86
72	24	90	90
	30	87	87
	36	77	77
78	24	90	90
	30	79	79

- APPLICABLE FOR UN-ANCHORED JAMB CONDITION ONLY
- JAMB TRIBUTARY SHALL BE DETERMINED PER SHEET 12 FOR SINGLE UNIT OR MULTI-UNITS STOREFRONT

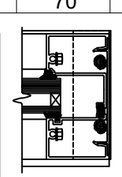

J1
DETAILS
21.1, 24.1

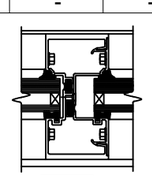

M1
DETAILS
12, 16

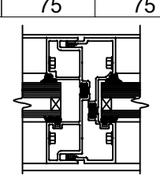

M2
DETAILS
14, 18

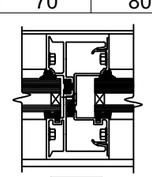

M3
DETAIL 13

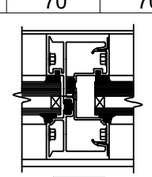

M4
DETAIL 17

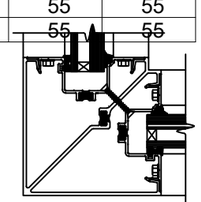

M5
DETAILS
32, 35, 38, 41

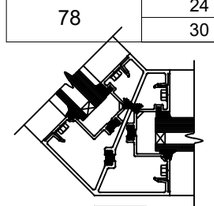

M6
DETAILS
33, 36, 39, 42

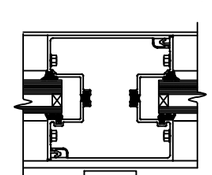

M7
DETAILS
15, 19

NOTE: FRAME WIDTHS = FRAME TRIBUTARY WIDTH

NOTE: SPANS NOT IN THIS TABLE CAN BE ADDED UNDER SITE SPECIFIC ENGINEERING AND SHALL BE APPROVED BY THE AUTHORITY HAVING JURISDICTION (AHJ)

Frank Bennardo
PE# 0046549 CA# 9885

AUGUST 31, 2022

FRANK L. BENNARDO LICENSE No. PE0046549 STATE OF FLORIDA PROFESSIONAL ENGINEER

FL#20665.3

ENGINEERING EXPRESS®
POSTAL ADDRESS:
401 W. ATLANTIC AVE R10 #219
DELRAY BEACH, FL 33444
ENGINEERINGEXPRESS.COM

OLDCASTLE BUILDING ENVELOPE®
803 AIRPORT ROAD
TERRELL, TX 75160
(972) 551-6100

FG-5750 STOREMAX® THERMAL IMPACT STOREFRONT SYSTEM WET & DRY GLAZED

REMARKS	DRWN	CHKD	DATE
INIT ISSUE	JEM	AJP	07/23/20
REVISIONS	SSQ	RS	03/11/22
-	-	-	-
-	-	-	-
-	-	-	-

COPYRIGHT ENGINEERING EXPRESS®

20-29229g

SCALE: NTS UNLESS NOTED

c:\users\sam\engineering express\production - documents\projects\20-\20-29229 oldcastle - fg 5000 & fg 5100\revision order 8879\work\drawings & cad\fg-5750t\20-29229g obe - fg-5750tg 8-24-22.dwg
8/31/2022 2:17 PM SAM

MULLION LOADING TABLES (P.S.F.)

SINGLE SPAN MULLION LOADING CHART		MULLION TYPE M1		MULLION TYPE M2		MULLION TYPE M3 - M4		MULLION TYPE M5		MULLION TYPE M6		MULLION TYPE M7	
FRAME HEIGHT (in)	FRAME WIDTH (in)	(+) P.S.F	(-) P.S.F	(+) P.S.F	(-) P.S.F	(+) P.S.F	(-) P.S.F	(+) P.S.F	(-) P.S.F	(+) P.S.F	(-) P.S.F	(+) P.S.F	(-) P.S.F
89	24	70	80	70	70	75	75	70	80	70	70	55	55
	30	70	80	70	70	75	75	70	80	70	70	55	55
	36	70	80	70	70	75	75	70	80	70	70	55	55
	42	70	80	70	70	75	75	70	80	70	70	55	55
	44.75	70	80	70	70	75	75	70	80	70	70	55	55
	48	70	80	70	70	75	75	70	80	70	70	55	55
	54	70	80	70	70	75	75	70	80	70	70	55	55
	60	70	80	-	-	75	75	70	80	70	70	55	55
	66	70	80	-	-	75	75	70	80	70	70	55	55
	72	70	80	-	-	75	75	70	80	70	70	55	55
	78	70	80	-	-	75	75	-	-	-	-	-	-
96	24	70	80	70	70	75	75	70	80	70	70	55	55
	30	70	80	70	70	75	75	70	80	70	70	55	55
	36	70	80	70	70	75	75	70	80	70	70	55	55
	42	70	80	70	70	75	75	70	80	70	70	55	55
	44.75	70	80	70	70	75	75	70	80	70	70	55	55
	48	70	80	70	70	75	75	70	80	70	70	55	55
	54	70	80	70	70	75	75	70	80	70	70	55	55
	60	70	80	-	-	75	75	70	80	70	70	55	55
	66	70	80	-	-	75	75	70	80	70	70	55	55
	72	69	78	-	-	75	75	70	80	-	-	55	55
	78	-	-	-	-	75	75	-	-	-	-	-	-
102	24	70	80	70	70	75	75	70	80	70	70	55	55
	30	70	80	70	70	75	75	70	80	70	70	55	55
	36	70	80	70	70	75	75	70	80	70	70	55	55
	42	70	80	70	70	75	75	70	80	70	70	55	55
	44.75	70	80	70	70	75	75	70	80	70	70	55	55
	48	70	80	70	70	75	75	70	80	70	70	55	55
	54	70	80	-	-	75	75	70	80	70	70	55	55
	60	68	78	-	-	75	75	70	80	70	70	55	55
	66	63	73	-	-	75	75	70	80	70	70	55	55
	72	-	-	-	-	75	75	-	-	-	-	-	-
108	24	70	80	70	70	75	75	70	80	70	70	55	55
	30	70	80	70	70	75	75	70	80	70	70	55	55
	36	70	80	70	70	75	75	70	80	70	70	55	55
	42	70	80	70	70	75	75	70	80	70	70	55	55
	44.75	70	80	70	70	75	75	70	80	70	70	55	55
	48	70	79	70	70	75	75	70	80	70	70	55	55
	54	65	72	70	70	75	75	70	80	70	70	55	55
	60	60	66	70	70	75	75	70	80	70	70	55	55
	66	56	62	-	-	75	75	-	-	-	-	-	-
	72	-	-	-	-	75	75	-	-	-	-	-	-

SINGLE SPAN JAMB LOADING CHART		MULLION TYPE J1	
FRAME HEIGHT (in)	FRAME WIDTH (in)	(+) P.S.F	(-) P.S.F
84	24	86	86
	30	90	90
89	24	81	81
96	24	74	74
102	24	69	69
108	24	65	65

NOTE: FRAME WIDTHS = FRAME TRIBUTARY WIDTH

NOTE: SPANS NOT IN THIS TABLE CAN BE ADDED UNDER SITE SPECIFIC ENGINEERING AND SHALL BE APPROVED BY THE AUTHORITY HAVING JURISDICTION (AHJ)

- APPLICABLE FOR UN-ANCHORED JAMB CONDITION ONLY
- JAMB TRIBUTARY SHALL BE DETERMINED PER SHEET 12 FOR SINGLE UNIT OR MULTI-UNITS STOREFRONT

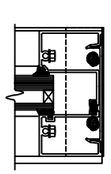

J1
DETAILS 21.1, 24.1

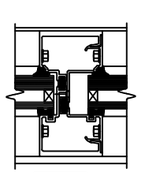

M1
DETAILS 12, 16

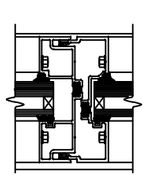

M2
DETAILS 14, 18

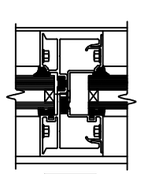

M3
DETAIL 13

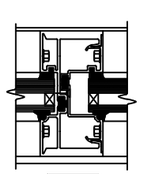

M4
DETAIL 17

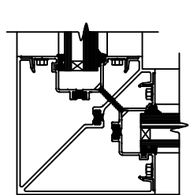

M5
DETAILS 32, 35, 38, 41

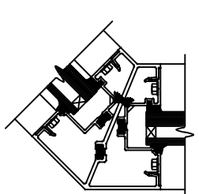

M6
DETAILS 33, 36, 39, 42

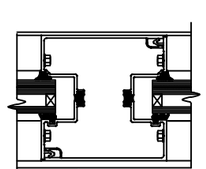

M7
DETAILS 15, 19

Frank Bennardo
PE# 0046549 CA# 9885

AUGUST 31, 2022

FRANK L. BENNARDO LICENSE No. PE0046549 STATE OF FLORIDA PROFESSIONAL ENGINEER

FL#20665.3

ENGINEERING EXPRESS®
POSTAL ADDRESS:
401 W. ATLANTIC AVE R10 #219
DELRAY BEACH, FL 33444
ENGINEERINGEXPRESS.COM

OLDCASTLE BUILDING ENVELOPE®
803 AIRPORT ROAD
TERRELL, TX 75160
(972) 551-6100

FG-5750 STOREMAX® THERMAL IMPACT STOREFRONT SYSTEM WET & DRY GLAZED

REMARKS	DRWN	CHKD	DATE
INIT ISSUE	JEM	AJP	07/23/20
REVISIONS	SSQ	RS	03/11/22
-	-	-	-
-	-	-	-
-	-	-	-

COPYRIGHT ENGINEERING EXPRESS®

20-29229g

SCALE: NTS UNLESS NOTED

8/31/2022 2:17 PM SAM c:\users\sam\engineering express\production - documents\projects\20-\20-29229 oldcastle - fg 5000 & fg 5100\revision order 8879\work\drawings & cad\fg-5750t\20-29229g obe - fg-5750tg 8-24-22.dwg

MULLION LOADING TABLES (P.S.F.)

SINGLE SPAN MULLION LOADING CHART		MULLION TYPE M1		MULLION TYPE M2		MULLION TYPE M3 - M4		MULLION TYPE M5		MULLION TYPE M6		MULLION TYPE M7	
FRAME HEIGHT (in)	FRAME WIDTH (in)	(+) P.S.F	(-) P.S.F	(+) P.S.F	(-) P.S.F	(+) P.S.F	(-) P.S.F	(+) P.S.F	(-) P.S.F	(+) P.S.F	(-) P.S.F	(+) P.S.F	(-) P.S.F
109	24	70	80	70	70	75	75	70	80	70	70	55	55
	30	70	80	70	70	75	75	70	80	70	70	55	55
	36	70	80	70	70	75	75	70	80	70	70	55	55
	42	70	80	70	70	75	75	70	80	70	70	55	55
	44.75	70	80	70	70	75	75	70	80	70	70	55	55
	48	70	79	70	70	75	75	70	80	70	70	55	55
	54	65	72	70	70	75	75	70	80	70	70	55	55
	60	60	66	70	70	75	75	70	80	70	70	55	55
	66	56	62	-	-	74	74	-	-	-	-	-	-
114	24	70	80	-	-	75	75	70	80	-	-	55	55
	30	70	80	-	-	75	75	70	80	-	-	55	55
	36	70	80	-	-	75	75	70	80	-	-	55	55
	42	70	75	-	-	75	75	70	80	-	-	55	55
	44.75	68	71	-	-	75	75	70	80	-	-	55	55
	48	64	67	-	-	75	75	70	80	-	-	55	55
	54	58	61	-	-	75	75	70	80	-	-	55	55
	60	53	56	-	-	73	73	70	80	-	-	55	55
	66	-	-	-	-	69	69	-	-	-	-	-	-
120	24	70	80	-	-	75	75	70	80	-	-	55	55
	30	70	80	-	-	75	75	70	80	-	-	55	55
	36	70	74	-	-	75	75	70	80	-	-	55	55
	42	65	64	-	-	75	75	70	80	-	-	55	55
	44.75	61	60	-	-	75	75	70	80	-	-	55	55
	48	57	57	-	-	75	75	70	80	-	-	55	55
	54	52	51	-	-	70	70	70	80	-	-	55	55
	60	47	47	-	-	68	68	-	-	-	-	-	-
126	24	-	-	-	-	75	75	70	80	-	-	55	55
	30	-	-	-	-	75	75	70	80	-	-	55	55
	36	-	-	-	-	75	75	70	80	-	-	55	55
	42	-	-	-	-	75	75	70	80	-	-	55	55
	44.75	-	-	-	-	75	75	70	80	-	-	55	55
	48	-	-	-	-	68	68	70	80	-	-	55	55
	54	-	-	-	-	62	62	70	78	-	-	55	55

NOTE: FRAME WIDTHS = FRAME TRIBUTARY WIDTH

NOTE: SPANS NOT IN THIS TABLE CAN BE ADDED UNDER SITE SPECIFIC ENGINEERING AND SHALL BE APPROVED BY THE AUTHORITY HAVING JURISDICTION (AHJ)

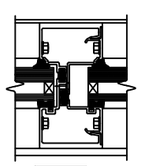

M1
DETAILS
12, 16

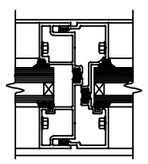

M2
DETAILS
14, 18

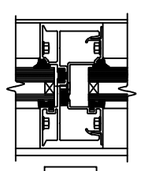

M3
DETAIL 13

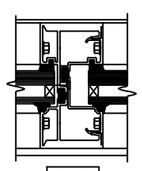

M4
DETAIL 17

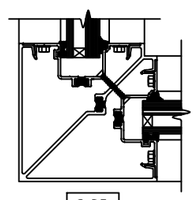

M5
DETAILS
32, 35, 38, 41

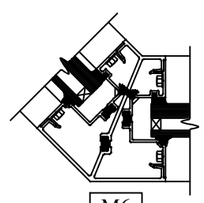

M6
DETAILS
33, 36, 39, 42

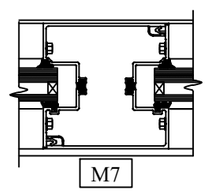

M7
DETAILS
15, 19

Frank Bennardo
PE# 0046549 CA# 9885

AUGUST 31, 2022

FRANK L. BENNARDO LICENSE No. PE0046549 STATE OF FLORIDA PROFESSIONAL ENGINEER

FL#20665.3

ENGINEERING EXPRESS®
POSTAL ADDRESS:
401 W. ATLANTIC AVE R10 #219
DELRAY BEACH, FL 33444
ENGINEERINGEXPRESS.COM

OLDCASTLE BUILDING ENVELOPE®
803 AIRPORT ROAD
TERRELL, TX 75160
(972) 551-6100

FG-5750 STOREMAX® THERMAL IMPACT STOREFRONT SYSTEM WET & DRY GLAZED

REMARKS	DRWN	CHKD	DATE
INIT ISSUE	JEM	AJP	07/23/20
REVISIONS	SSQ	RS	03/11/22
-	-	-	-
-	-	-	-
-	-	-	-

COPYRIGHT ENGINEERING EXPRESS®

20-29229g

SCALE: NTS UNLESS NOTED

c:\users\sam\engineering express\production - documents\projects\20-\20-29229 oldcastle - fg 5000 & fg 5100\revision order 8879\work\drawings & cad\fg-5750t\20-29229g obe - fg-5750tg 8-24-22.dwg
8/31/2022 2:17 PM SAM

MULLION LOADING TABLES (P.S.F.)

SINGLE SPAN MULLION LOADING CHART		MULLION TYPE M3 - M4		MULLION TYPE M5		MULLION TYPE M7	
FRAME HEIGHT (in)	FRAME WIDTH (in)	(+) P.S.F	(-) P.S.F	(+) P.S.F	(-) P.S.F	(+) P.S.F	(-) P.S.F
132	24	75	75	70	80	55	55
	30	75	75	70	80	55	55
	36	75	75	70	80	55	55
	42	75	75	70	80	55	55
	44.75	73	73	70	80	55	55
	48	69	69	70	75	55	55
	54	62	62	-	-	-	-
138	24	75	75	70	80	55	55
	30	75	75	70	80	55	55
	36	75	75	70	80	55	55
	42	70	70	70	80	55	55
	44.75	66	66	70	74	55	55
	48	62	62	65	65	55	55
	54	56	56	-	-	-	-
144	24	75	75	70	80	55	55
	30	75	75	70	80	55	55
	36	71	71	70	75	55	55
	42	62	62	65	65	55	55
	44.75	58	58	61	61	55	55
	48	54	54	57	57	55	55
	54	49	49	-	-	-	-
146	24	75	75	-	-	-	-
	30	75	75	-	-	-	-
	36	68	68	-	-	-	-
	42	59	59	-	-	-	-
	44.75	56	56	-	-	-	-
	48	52	52	-	-	-	-

SINGLE SPAN MULLION LOADING CHART		MULLION TYPE M8	
FRAME HEIGHT (in)	FRAME WIDTH (in)	(+) P.S.F	(-) P.S.F
120.375	73.25	70	80
146.00	66.00	70	70

NOTE: FRAME WIDTHS = FRAME TRIBUTARY WIDTH

NOTE: SPANS NOT IN THIS TABLE CAN BE ADDED UNDER SITE SPECIFIC ENGINEERING AND SHALL BE APPROVED BY THE AUTHORITY HAVING JURISDICTION (AHJ)

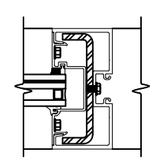

M8
DETAILS
16.1 & 16.2

NOTE: FRAME WIDTHS = FRAME TRIBUTARY WIDTH

NOTE: SPANS NOT IN THIS TABLE CAN BE ADDED UNDER SITE SPECIFIC ENGINEERING AND SHALL BE APPROVED BY THE AUTHORITY HAVING JURISDICTION (AHJ)

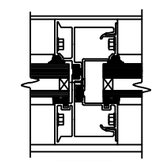

M3
DETAIL 13

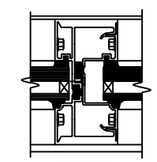

M4
DETAIL 17

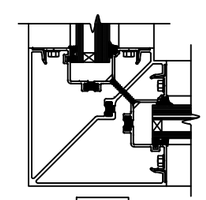

M5
DETAILS
32, 35, 38, 41

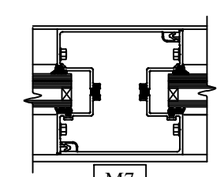

M7
DETAILS
15, 19

Frank Bennardo
PE# 0046549 CA# 9885

AUGUST 31, 2022

FRANK L. BENNARDO LICENSE No. PE0046549 STATE OF FLORIDA PROFESSIONAL ENGINEER

FL#20665.3

ENGINEERING EXPRESS®
POSTAL ADDRESS:
401 W. ATLANTIC AVE R10 #219
DELRAY BEACH, FL 33444
ENGINEERINGEXPRESS.COM

OLDCASTLE BUILDING ENVELOPE®
803 AIRPORT ROAD
TERRELL, TX 75160
(972) 551-6100

FG-5750 STOREMAX® THERMAL IMPACT STOREFRONT SYSTEM WET & DRY GLAZED

REMARKS	DRWN	CHKD	DATE
INIT ISSUE	JEM	AJP	07/23/20
REVISIONS	SSQ	RS	03/11/22
-	-	-	-
-	-	-	-
-	-	-	-

COPYRIGHT ENGINEERING EXPRESS®

20-29229g

SCALE: NTS UNLESS NOTED

8/31/2022 2:17 PM SAM c:\users\sam\engineering express\production - documents\projects\20-\20-29229 oldcastle - fg 5000 & fg 5100\revision order 8879\work\drawings & cad\fg-5750t\20-29229g obe - fg-5750tg 8-24-22.dwg

FASTENER SCHEDULE

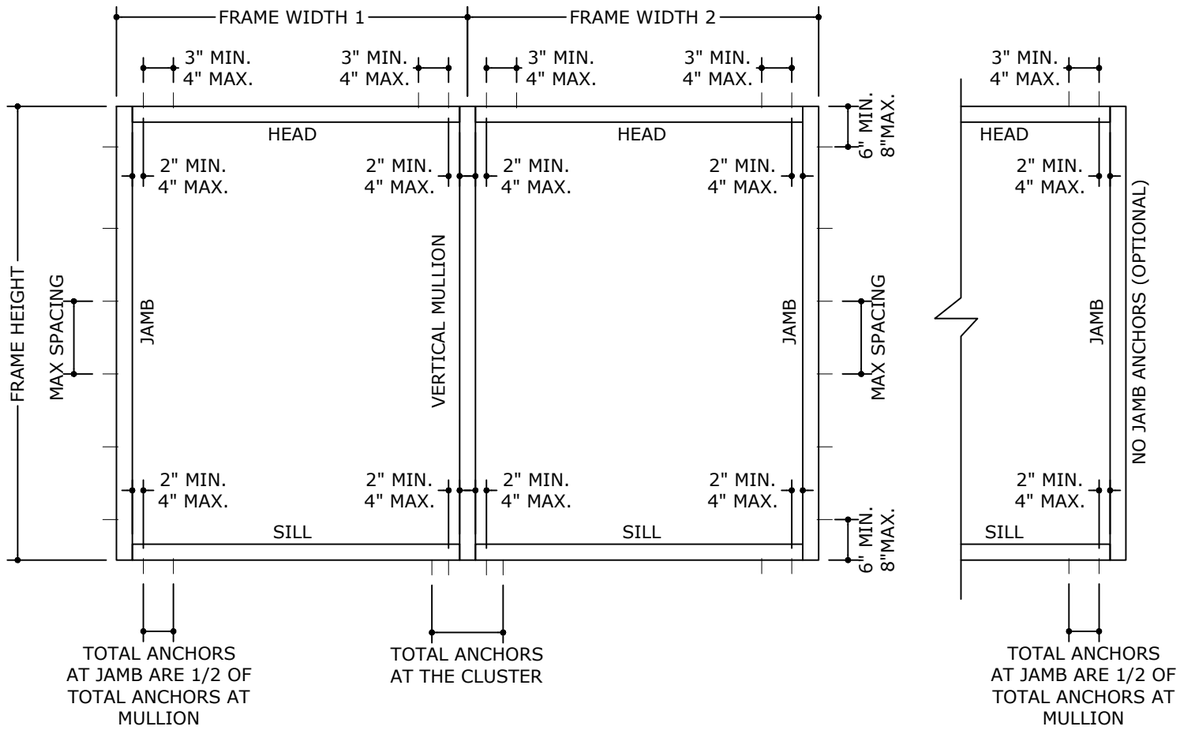

FASTENER SCHEDULE

ANCHOR TYPE	ANCHOR DIAMETER	TYPE	MANUFACTURER	SUBSTRATE	MIN EMBEDMENT (IN)	MIN EDGE DISTANCE (IN)	SPACING (IN)
A	1/4"	ULTRACON+ ANCHOR	DEWALT	POURED CONCRETE 3000 PSI MIN	1-3/4	2-1/2	3'' MIN. 4'' MAX.
B	1/4"-14	DRIL-FLEX HEX WASHER HEAD SELF DRILLING SCREW	DEWALT	16 GA MIN. STUD ASTM A-653 GRADE 33 STEEL	FULL	1-1/2	3'' MIN. 4'' MAX.
				1/8" STEEL-A36			
				1/8" ALUMINUM-6063-T6			
C	1/4"	ULTRACON+ ANCHOR OR LAG SCREW	DEWALT	2X WOOD BUCK G=0.55	1-1/2	1-1/2	3'' MIN. 4'' MAX.
D	1/4"	ULTRACON+ ANCHOR	DEWALT	GROUT FILLED MASONRY WALLS 1500 PSI MIN	1-1/2	1-1/2	4'' MIN.

Frank Bennardo
PE# 0046549 CA# 9885

AUGUST 31, 2022

FRANK L. BENNARDO LICENSE No. PE0046549 STATE OF FLORIDA PROFESSIONAL ENGINEER

FL#20665.3

ENGINEERING EXPRESS®
POSTAL ADDRESS:
401 W. ATLANTIC AVE R10 #219
DELRAY BEACH, FL 33444
ENGINEERINGEXPRESS.COM

OLDCASTLE BUILDING ENVELOPE®
803 AIRPORT ROAD
TERRELL, TX 75160
(972) 551-6100

FG-5750 STOREMAX® THERMAL IMPACT STOREFRONT SYSTEM WET & DRY GLAZED

REMARKS	DRWN	CHKD	DATE
INIT ISSUE	JEM	AJP	07/23/20
REVISIONS	SSQ	RS	03/11/22
-	-	-	-
-	-	-	-
-	-	-	-

COPYRIGHT ENGINEERING EXPRESS®

20-29229g

SCALE: NTS UNLESS NOTED

8/31/2022 2:17 PM SAM c:\users\sam\engineering express\production - documents\projects\20-\20-29229 oldcastle - fg 5000 & fg 5100\revision order 8879\work\drawings & cad\fg-5750t\20-29229g obe - fg-5750tg 8-24-22.dwg

MAXIMUM ALLOWABLE STRESS DESIGN PRESSURE RATING FOR STANDARD MULLIONS WITH HEAD, SILL AND JAMB CONNECTIONS-ANCHOR TYPE A

FRAME HEIGHT (IN)	TRIBUTARY WIDTH (IN)	TOTAL NUMBER OF ANCHORS AT THE CLUSTER-ANCHOR TYPE A							
		2		4		6		8	
		MAX PRESSURE (PSF)	JAMBS MAX ANCHOR SPACING (IN)	MAX PRESSURE (PSF)	JAMBS MAX ANCHOR SPACING (IN)	MAX PRESSURE (PSF)	JAMBS MAX ANCHOR SPACING (IN)	MAX PRESSURE (PSF)	JAMBS MAX ANCHOR SPACING (IN)
36	24	90	18''O.C.	90	18''O.C.	90	18''O.C.	90	18''O.C.
	36	90	18''O.C.	90	18''O.C.	90	18''O.C.	90	18''O.C.
	48	75	18''O.C.	90	18''O.C.	90	18''O.C.	90	18''O.C.
	60	60	18''O.C.	90	18''O.C.	90	18''O.C.	90	18''O.C.
	72	50	18''O.C.	90	18''O.C.	90	18''O.C.	90	18''O.C.
	78	46	18''O.C.	90	18''O.C.	90	18''O.C.	90	18''O.C.
48	24	90	24''O.C.	90	24''O.C.	90	24''O.C.	90	24''O.C.
	36	75	24''O.C.	90	24''O.C.	90	24''O.C.	90	24''O.C.
	48	56	24''O.C.	90	24''O.C.	90	24''O.C.	90	24''O.C.
	60	45	24''O.C.	90	24''O.C.	90	24''O.C.	90	24''O.C.
	72	37	24''O.C.	75	24''O.C.	90	16''O.C.	90	16''O.C.
	78	34	24''O.C.	69	24''O.C.	90	16''O.C.	90	16''O.C.
60	24	90	30''O.C.	90	30''O.C.	90	30''O.C.	90	30''O.C.
	36	60	30''O.C.	90	30''O.C.	90	30''O.C.	90	30''O.C.
	48	45	30''O.C.	90	30''O.C.	90	30''O.C.	90	30''O.C.
	60	36	30''O.C.	72	30''O.C.	90	20''O.C.	90	20''O.C.
	72	30	30''O.C.	60	30''O.C.	90	20''O.C.	90	20''O.C.
	78	27	30''O.C.	55	30''O.C.	83	20''O.C.	90	15''O.C.
72	24	75	36''O.C.	90	36''O.C.	90	36''O.C.	90	36''O.C.
	36	50	36''O.C.	90	36''O.C.	90	36''O.C.	90	36''O.C.
	48	37	36''O.C.	75	36''O.C.	90	24''O.C.	90	24''O.C.
	60	30	36''O.C.	60	36''O.C.	90	24''O.C.	90	24''O.C.
	72	25	36''O.C.	50	36''O.C.	75	24''O.C.	90	18''O.C.
	78	23	36''O.C.	46	36''O.C.	69	24''O.C.	90	18''O.C.

Frank Bennardo
PE# 0046549 CA# 9885

AUGUST 31, 2022

FRANK L. BENNARDO LICENSE No. PE0046549 STATE OF FLORIDA PROFESSIONAL ENGINEER

FL#20665.3

ENGINEERING EXPRESS®
POSTAL ADDRESS:
401 W. ATLANTIC AVE R10 #219
DELRAY BEACH, FL 33444
ENGINEERINGEXPRESS.COM

OLDCASTLE BUILDING ENVELOPE®
803 AIRPORT ROAD
TERRELL, TX 75160
(972) 551-6100

FG-5750 STOREMAX® THERMAL
IMPACT STOREFRONT SYSTEM
WET & DRY GLAZED

REMARKS	DRWN	CHKD	DATE
INIT ISSUE	JEM	AJP	07/23/20
REVISIONS	SSQ	RS	03/11/22
-	-	-	-
-	-	-	-
-	-	-	-

COPYRIGHT ENGINEERING EXPRESS®

20-29229g

SCALE: NTS UNLESS NOTED

8/31/2022 2:17 PM SAM c:\users\sam\engineering express\production - documents\projects\20-\20-29229 oldcastle - fg 5000 & fg 5100\revision order 8879\work\drawings & cad\fg-5750t\20-29229g obe - fg-5750tg 8-24-22.dwg

MAXIMUM ALLOWABLE STRESS DESIGN PRESSURE RATING FOR STANDARD MULLIONS WITH HEAD, SILL AND JAMB CONNECTIONS-ANCHOR TYPE A

FRAME HEIGHT (IN)	TRIBUTARY WIDTH (IN)	TOTAL NUMBER OF ANCHORS AT THE CLUSTER-ANCHOR TYPE A													
		2		4		6		8		10		12		16	
		MAX PRESSURE (PSF)	JAMBS MAX ANCHOR SPACING (IN)	MAX PRESSURE (PSF)	JAMBS MAX ANCHOR SPACING (IN)	MAX PRESSURE (PSF)	JAMBS MAX ANCHOR SPACING (IN)	MAX PRESSURE (PSF)	JAMBS MAX ANCHOR SPACING (IN)	MAX PRESSURE (PSF)	JAMBS MAX ANCHOR SPACING (IN)	MAX PRESSURE (PSF)	JAMBS MAX ANCHOR SPACING (IN)	MAX PRESSURE (PSF)	JAMBS MAX ANCHOR SPACING (IN)
84	24	64	42''O.C.	90	42''O.C.	90	42''O.C.	90	42''O.C.	90	42''O.C.	90	42''O.C.	90	42''O.C.
	36	42	42''O.C.	85	42''O.C.	90	28''O.C.	90	28''O.C.	90	28''O.C.	90	28''O.C.	90	28''O.C.
	48	32	42''O.C.	64	42''O.C.	90	28''O.C.	90	28''O.C.	90	28''O.C.	90	28''O.C.	90	28''O.C.
	60	25	42''O.C.	51	42''O.C.	77	28''O.C.	90	21''O.C.	90	21''O.C.	90	21''O.C.	90	21''O.C.
	72	21	42''O.C.	42	42''O.C.	64	28''O.C.	85	21''O.C.	90	17''O.C.	90	17''O.C.	90	17''O.C.
	78	19	42''O.C.	39	42''O.C.	59	28''O.C.	79	21''O.C.	90	17''O.C.	90	17''O.C.	90	17''O.C.
96	24	56	48''O.C.	90	48''O.C.	90	48''O.C.	90	48''O.C.	90	48''O.C.	90	48''O.C.	90	48''O.C.
	36	37	48''O.C.	75	48''O.C.	90	32''O.C.	90	32''O.C.	90	32''O.C.	90	32''O.C.	90	32''O.C.
	48	28	48''O.C.	56	48''O.C.	84	32''O.C.	90	24''O.C.	90	24''O.C.	90	24''O.C.	90	24''O.C.
	60	22	48''O.C.	45	48''O.C.	67	32''O.C.	90	24''O.C.	90	24''O.C.	90	24''O.C.	90	24''O.C.
	72	18	48''O.C.	37	48''O.C.	56	32''O.C.	75	24''O.C.	90	19''O.C.	90	19''O.C.	90	19''O.C.
	78	17	48''O.C.	34	48''O.C.	51	32''O.C.	69	24''O.C.	86	19''O.C.	90	16''O.C.	90	16''O.C.
108	24	50	54''O.C.	90	54''O.C.	90	54''O.C.	90	54''O.C.	90	54''O.C.	90	54''O.C.	90	54''O.C.
	36	33	54''O.C.	66	54''O.C.	90	36''O.C.	90	36''O.C.	90	36''O.C.	90	36''O.C.	90	36''O.C.
	48	25	54''O.C.	50	54''O.C.	75	36''O.C.	90	27''O.C.	90	27''O.C.	90	27''O.C.	90	27''O.C.
	60	20	54''O.C.	40	54''O.C.	60	36''O.C.	80	27''O.C.	90	22''O.C.	90	22''O.C.	90	22''O.C.
	72	16	54''O.C.	33	54''O.C.	50	36''O.C.	66	27''O.C.	83	22''O.C.	90	18''O.C.	90	18''O.C.
	78	15	54''O.C.	30	54''O.C.	46	36''O.C.	61	27''O.C.	76	22''O.C.	90	18''O.C.	90	18''O.C.
120	24	45	60''O.C.	90	60''O.C.	90	60''O.C.	90	60''O.C.	90	60''O.C.	90	60''O.C.	90	60''O.C.
	36	30	60''O.C.	60	60''O.C.	90	40''O.C.	90	40''O.C.	90	40''O.C.	90	40''O.C.	90	40''O.C.
	48	22	60''O.C.	45	60''O.C.	67	40''O.C.	90	30''O.C.	90	30''O.C.	90	30''O.C.	90	30''O.C.
	60	18	60''O.C.	36	60''O.C.	54	40''O.C.	72	30''O.C.	90	24''O.C.	90	24''O.C.	90	24''O.C.
	72	15	60''O.C.	30	60''O.C.	45	40''O.C.	60	30''O.C.	75	24''O.C.	90	20''O.C.	90	20''O.C.
	78	13	60''O.C.	27	60''O.C.	41	40''O.C.	55	30''O.C.	69	24''O.C.	83	20''O.C.	90	17''O.C.

Frank Bennardo
PE# 0046549 CA# 9885

AUGUST 31, 2022

FRANK L. BENNARDO LICENSE No. PE0046549 STATE OF FLORIDA PROFESSIONAL ENGINEER

FL#20665.3

ENGINEERING EXPRESS®
POSTAL ADDRESS:
401 W. ATLANTIC AVE R10 #219
DELRAY BEACH, FL 33444
ENGINEERINGEXPRESS.COM

OLDCASTLE BUILDING ENVELOPE®
803 AIRPORT ROAD
TERRELL, TX 75160
(972) 551-6100

FG-5750 STOREMAX® THERMAL IMPACT STOREFRONT SYSTEM WET & DRY GLAZED

REMARKS	DRWN	CHKD	DATE
INIT ISSUE	JEM	AJP	07/23/20
REVISIONS	SSQ	RS	03/11/22
-	-	-	-
-	-	-	-
-	-	-	-

COPYRIGHT ENGINEERING EXPRESS®

20-29229g

SCALE: NTS UNLESS NOTED

8/31/2022 2:17 PM SAM c:\users\sam\engineering express\production - documents\projects\20-\20-29229 oldcastle - fg 5000 & fg 5100\revision order 8879\work\drawings & cad\fg-5750t\20-29229g obe - fg-5750tg 8-24-22.dwg

MAXIMUM ALLOWABLE STRESS DESIGN PRESSURE RATING FOR STANDARD MULLIONS WITH HEAD, SILL AND JAMB CONNECTIONS-ANCHOR TYPE A

FRAME HEIGHT (IN)	TRIBUTARY WIDTH (IN)	TOTAL NUMBER OF ANCHORS AT THE CLUSTER-ANCHOR TYPE A													
		2		4		6		8		10		12		16	
		MAX PRESSURE (PSF)	JAMBS MAX ANCHOR SPACING (IN)	MAX PRESSURE (PSF)	JAMBS MAX ANCHOR SPACING (IN)	MAX PRESSURE (PSF)	JAMBS MAX ANCHOR SPACING (IN)	MAX PRESSURE (PSF)	JAMBS MAX ANCHOR SPACING (IN)	MAX PRESSURE (PSF)	JAMBS MAX ANCHOR SPACING (IN)	MAX PRESSURE (PSF)	JAMBS MAX ANCHOR SPACING (IN)	MAX PRESSURE (PSF)	JAMBS MAX ANCHOR SPACING (IN)
132	24	40	66''O.C.	81	66''O.C.	90	44''O.C.	90	44''O.C.	90	44''O.C.	90	44''O.C.	90	44''O.C.
	36	27	66''O.C.	54	66''O.C.	81	44''O.C.	90	33''O.C.	90	33''O.C.	90	33''O.C.	90	33''O.C.
	48	20	66''O.C.	40	66''O.C.	61	44''O.C.	81	33''O.C.	90	26''O.C.	90	26''O.C.	90	26''O.C.
	60	16	66''O.C.	32	66''O.C.	49	44''O.C.	65	33''O.C.	81	26''O.C.	90	22''O.C.	90	22''O.C.
	72	13	66''O.C.	27	66''O.C.	40	44''O.C.	54	33''O.C.	68	26''O.C.	81	22''O.C.	90	19''O.C.
	78	12	66''O.C.	25	66''O.C.	37	44''O.C.	50	33''O.C.	62	26''O.C.	75	22''O.C.	90	17''O.C.
144	24	37	72''O.C.	75	72''O.C.	90	48''O.C.	90	48''O.C.	90	48''O.C.	90	48''O.C.	90	48''O.C.
	36	25	72''O.C.	50	72''O.C.	75	48''O.C.	90	36''O.C.	90	36''O.C.	90	36''O.C.	90	36''O.C.
	48	18	72''O.C.	37	72''O.C.	56	48''O.C.	75	36''O.C.	90	29''O.C.	90	29''O.C.	90	29''O.C.
	60	15	72''O.C.	30	72''O.C.	45	48''O.C.	60	36''O.C.	75	29''O.C.	90	24''O.C.	90	24''O.C.
	72	12	72''O.C.	25	72''O.C.	37	48''O.C.	50	36''O.C.	62	29''O.C.	75	24''O.C.	90	18''O.C.
	78	11	72''O.C.	23	72''O.C.	34	48''O.C.	46	36''O.C.	57	29''O.C.	69	24''O.C.	90	18''O.C.

Frank Bennardo
PE# 0046549 CA# 9885

AUGUST 31, 2022

FRANK L. BENNARDO LICENSE No. PE0046549 STATE OF FLORIDA PROFESSIONAL ENGINEER

FL#20665.3

ENGINEERING EXPRESS®
POSTAL ADDRESS:
401 W. ATLANTIC AVE R10 #219
DELRAY BEACH, FL 33444
ENGINEERINGEXPRESS.COM

OLDCASTLE BUILDING ENVELOPE®
803 AIRPORT ROAD
TERRELL, TX 75160
(972) 551-6100

FG-5750 STOREMAX® THERMAL IMPACT STOREFRONT SYSTEM WET & DRY GLAZED

REMARKS	DRWN	CHKD	DATE
INIT ISSUE	JEM	AJP	07/23/20
REVISIONS	SSQ	RS	03/11/22
-	-	-	-
-	-	-	-
-	-	-	-

COPYRIGHT ENGINEERING EXPRESS®

20-29229g

SCALE: NTS UNLESS NOTED

8/31/2022 2:17 PM SAM c:\users\sam\engineering express\production - documents\projects\20-\20-29229 oldcastle - fg 5000 & fg 5100\revision order 8879\work\drawings & cad\fg-5750t\20-29229g obe - fg-5750tg 8-24-22.dwg

MAXIMUM ALLOWABLE STRESS DESIGN PRESSURE RATING FOR STANDARD MULLIONS WITH HEAD, SILL AND JAMB CONNECTIONS-ANCHOR TYPE B

FRAME HEIGHT (IN)	TRIBUTARY WIDTH (IN)	TOTAL NUMBER OF ANCHORS AT THE CLUSTER-ANCHOR TYPE B			
		2		4	
		MAX PRESSURE (PSF)	JAMBS MAX ANCHOR SPACING (IN)	MAX PRESSURE (PSF)	JAMBS MAX ANCHOR SPACING (IN)
36	24	90	18''O.C.	90	18''O.C.
	36	90	18''O.C.	90	18''O.C.
	48	90	18''O.C.	90	18''O.C.
	60	90	18''O.C.	90	18''O.C.
	72	90	18''O.C.	90	18''O.C.
	78	90	18''O.C.	90	18''O.C.
48	24	90	24''O.C.	90	24''O.C.
	36	90	24''O.C.	90	24''O.C.
	48	90	24''O.C.	90	24''O.C.
	60	90	24''O.C.	90	24''O.C.
	72	83	24''O.C.	90	24''O.C.
	78	76	24''O.C.	90	24''O.C.
60	24	90	30''O.C.	90	30''O.C.
	36	90	30''O.C.	90	30''O.C.
	48	90	30''O.C.	90	30''O.C.
	60	80	30''O.C.	90	30''O.C.
	72	66	30''O.C.	90	30''O.C.
	78	61	30''O.C.	90	30''O.C.
72	24	90	36''O.C.	90	36''O.C.
	36	90	36''O.C.	90	36''O.C.
	48	83	36''O.C.	90	36''O.C.
	60	66	36''O.C.	90	36''O.C.
	72	55	36''O.C.	90	36''O.C.
	78	51	36''O.C.	90	36''O.C.

Frank Bennardo
PE# 0046549 CA# 9885

AUGUST 31, 2022

FRANK L. BENNARDO LICENSE No. PE0046549 STATE OF FLORIDA PROFESSIONAL ENGINEER

FL#20665.3

ENGINEERING EXPRESS®
POSTAL ADDRESS:
401 W. ATLANTIC AVE R10 #219
DELRAY BEACH, FL 33444
ENGINEERINGEXPRESS.COM

OLDCASTLE BUILDING ENVELOPE®
803 AIRPORT ROAD
TERRELL, TX 75160
(972) 551-6100

FG-5750 STOREMAX® THERMAL
IMPACT STOREFRONT SYSTEM
WET & DRY GLAZED

REMARKS	DRWN	CHKD	DATE
INIT ISSUE	JEM	AJP	07/23/20
REVISIONS	SSQ	RS	03/11/22
-	-	-	-
-	-	-	-
-	-	-	-

COPYRIGHT ENGINEERING EXPRESS®

20-29229g

SCALE: NTS UNLESS NOTED

8/31/2022 2:17 PM SAM c:\users\sam\engineering express\production - documents\projects\20-20-29229 oldcastle - fg 5000 & fg 5100\revision order 8879\work\drawings & cad\fg-5750t\20-29229g obe - fg-5750tg 8-24-22.dwg

MAXIMUM ALLOWABLE STRESS DESIGN PRESSURE RATING FOR STANDARD MULLIONS WITH HEAD, SILL AND JAMB CONNECTIONS-ANCHOR TYPE B

FRAME HEIGHT (IN)	TRIBUTARY WIDTH (IN)	TOTAL NUMBER OF ANCHORS AT THE CLUSTER-ANCHOR TYPE B					
		2		4		6	
		MAX PRESSURE (PSF)	JAMBS MAX ANCHOR SPACING (IN)	MAX PRESSURE (PSF)	JAMBS MAX ANCHOR SPACING (IN)	MAX PRESSURE (PSF)	JAMBS MAX ANCHOR SPACING (IN)
84	24	90	42''O.C.	90	42''O.C.	90	42''O.C.
	36	90	42''O.C.	90	42''O.C.	90	42''O.C.
	48	71	42''O.C.	90	42''O.C.	90	42''O.C.
	60	57	42''O.C.	90	42''O.C.	90	42''O.C.
	72	47	42''O.C.	90	42''O.C.	90	42''O.C.
	78	43	42''O.C.	87	42''O.C.	90	28''O.C.
96	24	90	48''O.C.	90	48''O.C.	90	48''O.C.
	36	83	48''O.C.	90	48''O.C.	90	48''O.C.
	48	62	48''O.C.	90	48''O.C.	90	48''O.C.
	60	50	48''O.C.	90	48''O.C.	90	48''O.C.
	72	41	48''O.C.	83	48''O.C.	90	32''O.C.
	78	38	48''O.C.	76	48''O.C.	90	32''O.C.
108	24	90	54''O.C.	90	54''O.C.	90	54''O.C.
	36	74	54''O.C.	90	54''O.C.	90	54''O.C.
	48	55	54''O.C.	90	54''O.C.	90	54''O.C.
	60	44	54''O.C.	88	54''O.C.	90	36''O.C.
	72	37	54''O.C.	74	54''O.C.	90	36''O.C.
	78	34	54''O.C.	68	54''O.C.	90	36''O.C.
120	24	90	60''O.C.	90	60''O.C.	90	60''O.C.
	36	66	60''O.C.	90	60''O.C.	90	60''O.C.
	48	50	60''O.C.	90	60''O.C.	90	60''O.C.
	60	40	60''O.C.	80	60''O.C.	90	40''O.C.
	72	33	60''O.C.	66	60''O.C.	90	40''O.C.
	78	30	60''O.C.	61	60''O.C.	90	40''O.C.

Frank Bennardo
PE# 0046549 CA# 9885

AUGUST 31, 2022

FRANK L. BENNARDO LICENSE No. PE0046549 STATE OF FLORIDA PROFESSIONAL ENGINEER

FL#20665.3

ENGINEERING EXPRESS®
POSTAL ADDRESS:
401 W. ATLANTIC AVE R10 #219
DELRAY BEACH, FL 33444
ENGINEERINGEXPRESS.COM

OLDCASTLE BUILDING ENVELOPE®
803 AIRPORT ROAD
TERRELL, TX 75160
(972) 551-6100

FG-5750 STOREMAX® THERMAL
IMPACT STOREFRONT SYSTEM
WET & DRY GLAZED

REMARKS	DRWN	CHKD	DATE
INIT ISSUE	JEM	AJP	07/23/20
REVISIONS	SSQ	RS	03/11/22
-	-	-	-
-	-	-	-
-	-	-	-

COPYRIGHT ENGINEERING EXPRESS®

20-29229g

SCALE: NTS UNLESS NOTED

8/31/2022 2:17 PM SAM c:\users\sam\engineering express\production - documents\projects\20-\20-29229 oldcastle - fg 5000 & fg 5100\revision order 8879\work\drawings & cad\fg-5750t\20-29229g obe - fg-5750tg 8-24-22.dwg

MAXIMUM ALLOWABLE STRESS DESIGN PRESSURE RATING FOR STANDARD MULLIONS WITH HEAD, SILL AND JAMB CONNECTIONS-ANCHOR TYPE B

FRAME HEIGHT (IN)	TRIBUTARY WIDTH (IN)	TOTAL NUMBER OF ANCHORS AT THE CLUSTER-ANCHOR TYPE B							
		2		4		6		8	
		MAX PRESSURE (PSF)	JAMBS MAX ANCHOR SPACING (IN)	MAX PRESSURE (PSF)	JAMBS MAX ANCHOR SPACING (IN)	MAX PRESSURE (PSF)	JAMBS MAX ANCHOR SPACING (IN)	MAX PRESSURE (PSF)	JAMBS MAX ANCHOR SPACING (IN)
132	24	90	66''O.C.	90	66''O.C.	90	66''O.C.	90	66''O.C.
	36	60	66''O.C.	90	66''O.C.	90	66''O.C.	90	66''O.C.
	48	45	66''O.C.	90	66''O.C.	90	66''O.C.	90	66''O.C.
	60	36	66''O.C.	72	66''O.C.	90	44''O.C.	90	44''O.C.
	72	30	66''O.C.	60	66''O.C.	90	44''O.C.	90	44''O.C.
	78	27	66''O.C.	55	66''O.C.	83	44''O.C.	90	33''O.C.
144	24	83	72''O.C.	90	72''O.C.	90	72''O.C.	90	72''O.C.
	36	55	72''O.C.	90	72''O.C.	90	72''O.C.	90	72''O.C.
	48	41	72''O.C.	83	72''O.C.	90	48''O.C.	90	48''O.C.
	60	33	72''O.C.	66	72''O.C.	90	48''O.C.	90	48''O.C.
	72	27	72''O.C.	55	72''O.C.	83	48''O.C.	90	36''O.C.
	78	25	72''O.C.	51	72''O.C.	76	48''O.C.	90	36''O.C.

Frank Bennardo
PE# 0046549 CA# 9885

AUGUST 31, 2022

FRANK L. BENNARDO LICENSE No. PE0046549 STATE OF FLORIDA PROFESSIONAL ENGINEER

FL#20665.3

ENGINEERING EXPRESS®
POSTAL ADDRESS:
401 W. ATLANTIC AVE R10 #219
DELRAY BEACH, FL 33444
ENGINEERINGEXPRESS.COM

OLDCASTLE BUILDING ENVELOPE®
803 AIRPORT ROAD
TERRELL, TX 75160
(972) 551-6100

FG-5750 STOREMAX® THERMAL
IMPACT STOREFRONT SYSTEM
WET & DRY GLAZED

REMARKS	DRWN	CHKD	DATE
INIT ISSUE	JEM	AJP	07/23/20
REVISIONS	SSQ	RS	03/11/22
-	-	-	-
-	-	-	-
-	-	-	-

COPYRIGHT ENGINEERING EXPRESS®

20-29229g

SCALE: NTS UNLESS NOTED

8/31/2022 2:17 PM SAM c:\users\sam\engineering express\production - documents\projects\20-\20-29229 oldcastle - fg 5000 & fg 5100\revision order 8879\work\drawings & cad\fg-5750t\20-29229g obe - fg-5750tg 8-24-22.dwg

MAXIMUM ALLOWABLE STRESS DESIGN PRESSURE RATING FOR STANDARD MULLIONS WITH HEAD, SILL AND JAMB CONNECTIONS-ANCHOR TYPE C

FRAME HEIGHT (IN)	TRIBUTARY WIDTH (IN)	TOTAL NUMBER OF ANCHORS AT THE CLUSTER-ANCHOR TYPE C											
		2		4		6		8		10		12	
		MAX PRESSURE (PSF)	JAMBS MAX ANCHOR SPACING (IN)	MAX PRESSURE (PSF)	JAMBS MAX ANCHOR SPACING (IN)	MAX PRESSURE (PSF)	JAMBS MAX ANCHOR SPACING (IN)	MAX PRESSURE (PSF)	JAMBS MAX ANCHOR SPACING (IN)	MAX PRESSURE (PSF)	JAMBS MAX ANCHOR SPACING (IN)	MAX PRESSURE (PSF)	JAMBS MAX ANCHOR SPACING (IN)
36	24	90	18''O.C.	90	18''O.C.	90	18''O.C.	90	18''O.C.	90	18''O.C.	90	18''O.C.
	36	75	18''O.C.	90	18''O.C.	90	18''O.C.	90	18''O.C.	90	18''O.C.	90	18''O.C.
	48	56	18''O.C.	90	18''O.C.	90	18''O.C.	90	18''O.C.	90	18''O.C.	90	18''O.C.
	60	45	18''O.C.	90	18''O.C.	90	18''O.C.	90	18''O.C.	90	18''O.C.	90	18''O.C.
	72	37	18''O.C.	75	18''O.C.	90	12''O.C.	90	12''O.C.	90	12''O.C.	90	12''O.C.
	78	34	18''O.C.	69	18''O.C.	90	12''O.C.	90	12''O.C.	90	12''O.C.	90	12''O.C.
48	24	85	24''O.C.	90	24''O.C.	90	24''O.C.	90	24''O.C.	90	24''O.C.	90	24''O.C.
	36	56	24''O.C.	90	24''O.C.	90	24''O.C.	90	24''O.C.	90	24''O.C.	90	24''O.C.
	48	42	24''O.C.	85	24''O.C.	90	16''O.C.	90	16''O.C.	90	16''O.C.	90	16''O.C.
	60	34	24''O.C.	68	24''O.C.	90	16''O.C.	90	16''O.C.	90	16''O.C.	90	16''O.C.
	72	28	24''O.C.	56	24''O.C.	85	16''O.C.	90	12''O.C.	90	12''O.C.	90	12''O.C.
	78	26	24''O.C.	52	24''O.C.	78	16''O.C.	90	12''O.C.	90	12''O.C.	90	12''O.C.
60	24	68	30''O.C.	90	30''O.C.	90	30''O.C.	90	30''O.C.	90	30''O.C.	90	30''O.C.
	36	45	30''O.C.	90	30''O.C.	90	30''O.C.	90	30''O.C.	90	30''O.C.	90	30''O.C.
	48	34	30''O.C.	68	30''O.C.	90	20''O.C.	90	20''O.C.	90	20''O.C.	90	20''O.C.
	60	27	30''O.C.	54	30''O.C.	81	20''O.C.	90	15''O.C.	90	15''O.C.	90	15''O.C.
	72	22	30''O.C.	45	30''O.C.	68	20''O.C.	90	15''O.C.	90	15''O.C.	90	15''O.C.
	78	20	30''O.C.	41	30''O.C.	62	20''O.C.	83	15''O.C.	90	12''O.C.	90	12''O.C.
72	24	56	36''O.C.	90	36''O.C.	90	36''O.C.	90	36''O.C.	90	36''O.C.	90	36''O.C.
	36	37	36''O.C.	75	36''O.C.	90	24''O.C.	90	24''O.C.	90	24''O.C.	90	24''O.C.
	48	28	36''O.C.	56	36''O.C.	85	24''O.C.	90	18''O.C.	90	18''O.C.	90	18''O.C.
	60	22	36''O.C.	45	36''O.C.	68	24''O.C.	90	18''O.C.	90	18''O.C.	90	18''O.C.
	72	18	36''O.C.	37	36''O.C.	56	24''O.C.	75	18''O.C.	90	14''O.C.	90	14''O.C.
	78	17	36''O.C.	34	36''O.C.	52	24''O.C.	69	18''O.C.	87	14''O.C.	90	12''O.C.

Frank Bennardo
PE# 0046549 CA# 9885

AUGUST 31, 2022

FRANK L. BENNARDO LICENSE No. PE0046549 STATE OF FLORIDA PROFESSIONAL ENGINEER

FL#20665.3

ENGINEERING EXPRESS®
POSTAL ADDRESS:
401 W. ATLANTIC AVE R10 #219
DELRAY BEACH, FL 33444
ENGINEERINGEXPRESS.COM

OLDCASTLE BUILDING ENVELOPE®
803 AIRPORT ROAD
TERRELL, TX 75160
(972) 551-6100

FG-5750 STOREMAX® THERMAL IMPACT STOREFRONT SYSTEM WET & DRY GLAZED

REMARKS	DRWN	CHKD	DATE
INIT ISSUE	JEM	AJP	07/23/20
REVISIONS	SSQ	RS	03/11/22
-	-	-	-
-	-	-	-
-	-	-	-

COPYRIGHT ENGINEERING EXPRESS®

20-29229g

SCALE: NTS UNLESS NOTED

8/31/2022 2:17 PM SAM c:\users\sam\engineering express\production - documents\projects\20-\20-29229 oldcastle - fg 5000 & fg 5100\revision order 8879\work\drawings & cad\fg-5750t\20-29229g obe - fg-5750tg 8-24-22.dwg

MAXIMUM ALLOWABLE STRESS DESIGN PRESSURE RATING FOR STANDARD MULLIONS WITH HEAD, SILL AND JAMB CONNECTIONS-ANCHOR TYPE C

FRAME HEIGHT (IN)	TRIBUTARY WIDTH (IN)	TOTAL NUMBER OF ANCHORS AT THE CLUSTER-ANCHOR TYPE C													
		2		4		6		8		10		12		16	
		MAX PRESSURE (PSF)	JAMBS MAX ANCHOR SPACING (IN)	MAX PRESSURE (PSF)	JAMBS MAX ANCHOR SPACING (IN)	MAX PRESSURE (PSF)	JAMBS MAX ANCHOR SPACING (IN)	MAX PRESSURE (PSF)	JAMBS MAX ANCHOR SPACING (IN)	MAX PRESSURE (PSF)	JAMBS MAX ANCHOR SPACING (IN)	MAX PRESSURE (PSF)	JAMBS MAX ANCHOR SPACING (IN)	MAX PRESSURE (PSF)	JAMBS MAX ANCHOR SPACING (IN)
84	24	48	42''O.C.	90	42''O.C.	90	42''O.C.	90	42''O.C.	90	42''O.C.	90	42''O.C.	90	42''O.C.
	36	32	42''O.C.	64	42''O.C.	90	28''O.C.	90	28''O.C.	90	28''O.C.	90	28''O.C.	90	28''O.C.
	48	24	42''O.C.	48	42''O.C.	72	28''O.C.	90	21''O.C.	90	21''O.C.	90	21''O.C.	90	21''O.C.
	60	19	42''O.C.	38	42''O.C.	58	28''O.C.	77	21''O.C.	90	17''O.C.	90	17''O.C.	90	17''O.C.
	72	16	42''O.C.	32	42''O.C.	48	28''O.C.	64	21''O.C.	80	17''O.C.	90	14''O.C.	90	14''O.C.
	78	14	42''O.C.	29	42''O.C.	44	28''O.C.	59	21''O.C.	74	17''O.C.	89	14''O.C.	90	12''O.C.
96	24	42	48''O.C.	85	48''O.C.	90	32''O.C.	90	32''O.C.	90	32''O.C.	90	32''O.C.	90	32''O.C.
	36	28	48''O.C.	56	48''O.C.	85	32''O.C.	90	24''O.C.	90	24''O.C.	90	24''O.C.	90	24''O.C.
	48	21	48''O.C.	42	48''O.C.	63	32''O.C.	85	24''O.C.	90	19''O.C.	90	19''O.C.	90	19''O.C.
	60	17	48''O.C.	34	48''O.C.	51	32''O.C.	68	24''O.C.	85	19''O.C.	90	16''O.C.	90	16''O.C.
	72	14	48''O.C.	28	48''O.C.	42	32''O.C.	56	24''O.C.	70	19''O.C.	85	16''O.C.	90	14''O.C.
	78	13	48''O.C.	26	48''O.C.	39	32''O.C.	52	24''O.C.	65	19''O.C.	78	16''O.C.	90	14''O.C.
108	24	37	54''O.C.	75	54''O.C.	90	36''O.C.	90	36''O.C.	90	36''O.C.	90	36''O.C.	90	36''O.C.
	36	25	54''O.C.	50	54''O.C.	75	36''O.C.	90	27''O.C.	90	27''O.C.	90	27''O.C.	90	27''O.C.
	48	18	54''O.C.	37	54''O.C.	56	36''O.C.	75	27''O.C.	90	22''O.C.	90	22''O.C.	90	22''O.C.
	60	15	54''O.C.	30	54''O.C.	45	36''O.C.	60	27''O.C.	75	22''O.C.	90	18''O.C.	90	18''O.C.
	72	12	54''O.C.	25	54''O.C.	37	36''O.C.	50	27''O.C.	62	22''O.C.	75	18''O.C.	90	14''O.C.
	78	11	54''O.C.	23	54''O.C.	34	36''O.C.	46	27''O.C.	58	22''O.C.	69	18''O.C.	90	14''O.C.
120	24	34	60''O.C.	68	60''O.C.	90	40''O.C.	90	40''O.C.	90	40''O.C.	90	40''O.C.	90	40''O.C.
	36	22	60''O.C.	45	60''O.C.	68	40''O.C.	90	30''O.C.	90	30''O.C.	90	30''O.C.	90	30''O.C.
	48	17	60''O.C.	34	60''O.C.	51	40''O.C.	68	30''O.C.	85	24''O.C.	90	20''O.C.	90	20''O.C.
	60	13	60''O.C.	27	60''O.C.	40	40''O.C.	54	30''O.C.	68	24''O.C.	81	20''O.C.	90	17''O.C.
	72	11	60''O.C.	22	60''O.C.	34	40''O.C.	45	30''O.C.	56	24''O.C.	68	20''O.C.	90	15''O.C.
	78	10	60''O.C.	20	60''O.C.	31	40''O.C.	41	30''O.C.	52	24''O.C.	62	20''O.C.	83	15''O.C.

Frank Bennardo
PE# 0046549 CA# 9885

AUGUST 31, 2022

FRANK L. BENNARDO LICENSE No. PE0046549 STATE OF FLORIDA PROFESSIONAL ENGINEER

FL#20665.3

ENGINEERING EXPRESS®
POSTAL ADDRESS:
401 W. ATLANTIC AVE R10 #219
DELRAY BEACH, FL 33444
ENGINEERINGEXPRESS.COM

OLDCASTLE BUILDING ENVELOPE®
803 AIRPORT ROAD
TERRELL, TX 75160
(972) 551-6100

FG-5750 STOREMAX® THERMAL IMPACT STOREFRONT SYSTEM WET & DRY GLAZED

REMARKS	DRWN	CHKD	DATE
INIT ISSUE	JEM	AJP	07/23/20
REVISIONS	SSQ	RS	03/11/22
-	-	-	-
-	-	-	-
-	-	-	-

COPYRIGHT ENGINEERING EXPRESS®

20-29229g

SCALE: NTS UNLESS NOTED

8/31/2022 2:17 PM SAM c:\users\sam\engineering express\production - documents\projects\20-\20-29229 oldcastle - fg 5000 & fg 5100\revision order 8879\work\drawings & cad\fg-5750t\20-29229g obe - fg-5750tg 8-24-22.dwg

MAXIMUM ALLOWABLE STRESS DESIGN PRESSURE RATING FOR STANDARD MULLIONS WITH HEAD, SILL AND JAMB CONNECTIONS-ANCHOR TYPE C

FRAME HEIGHT (IN)	TRIBUTARY WIDTH (IN)	TOTAL NUMBER OF ANCHORS AT THE CLUSTER-ANCHOR TYPE C													
		2		4		6		8		10		12		16	
		MAX PRESSURE (PSF)	JAMBS MAX ANCHOR SPACING (IN)	MAX PRESSURE (PSF)	JAMBS MAX ANCHOR SPACING (IN)	MAX PRESSURE (PSF)	JAMBS MAX ANCHOR SPACING (IN)	MAX PRESSURE (PSF)	JAMBS MAX ANCHOR SPACING (IN)	MAX PRESSURE (PSF)	JAMBS MAX ANCHOR SPACING (IN)	MAX PRESSURE (PSF)	JAMBS MAX ANCHOR SPACING (IN)	MAX PRESSURE (PSF)	JAMBS MAX ANCHOR SPACING (IN)
132	24	30	66''O.C.	61	66''O.C.	90	44''O.C.	90	44''O.C.	90	44''O.C.	90	44''O.C.	90	44''O.C.
	36	20	66''O.C.	41	66''O.C.	61	44''O.C.	82	33''O.C.	90	26''O.C.	90	26''O.C.	90	26''O.C.
	48	15	66''O.C.	30	66''O.C.	46	44''O.C.	61	33''O.C.	77	26''O.C.	90	22''O.C.	90	22''O.C.
	60	12	66''O.C.	24	66''O.C.	37	44''O.C.	49	33''O.C.	61	26''O.C.	74	22''O.C.	90	17''O.C.
	72	10	66''O.C.	20	66''O.C.	30	44''O.C.	41	33''O.C.	51	26''O.C.	61	22''O.C.	82	17''O.C.
	78	9	66''O.C.	19	66''O.C.	28	44''O.C.	38	33''O.C.	47	26''O.C.	57	22''O.C.	76	17''O.C.
144	24	28	72''O.C.	56	72''O.C.	85	48''O.C.	90	36''O.C.	90	36''O.C.	90	36''O.C.	90	36''O.C.
	36	18	72''O.C.	37	72''O.C.	56	48''O.C.	75	36''O.C.	90	29''O.C.	90	29''O.C.	90	29''O.C.
	48	14	72''O.C.	28	72''O.C.	42	48''O.C.	56	36''O.C.	70	29''O.C.	85	24''O.C.	90	21''O.C.
	60	11	72''O.C.	22	72''O.C.	34	48''O.C.	45	36''O.C.	56	29''O.C.	68	24''O.C.	90	18''O.C.
	72	9	72''O.C.	18	72''O.C.	28	48''O.C.	37	36''O.C.	47	29''O.C.	56	24''O.C.	75	18''O.C.
	78	8	72''O.C.	17	72''O.C.	26	48''O.C.	34	36''O.C.	43	29''O.C.	52	24''O.C.	69	18''O.C.

Frank Bennardo
PE# 0046549 CA# 9885

AUGUST 31, 2022

FRANK L. BENNARDO LICENSE No. PE0046549 STATE OF FLORIDA PROFESSIONAL ENGINEER

FL#20665.3

ENGINEERING EXPRESS®
POSTAL ADDRESS:
401 W. ATLANTIC AVE R10 #219
DELRAY BEACH, FL 33444
ENGINEERINGEXPRESS.COM

OLDCASTLE BUILDING ENVELOPE®
803 AIRPORT ROAD
TERRELL, TX 75160
(972) 551-6100

FG-5750 STOREMAX® THERMAL IMPACT STOREFRONT SYSTEM WET & DRY GLAZED

REMARKS	DRWN	CHKD	DATE
INIT ISSUE	JEM	AJP	07/23/20
REVISIONS	SSQ	RS	03/11/22
-	-	-	-
-	-	-	-
-	-	-	-

COPYRIGHT ENGINEERING EXPRESS®

20-29229g

SCALE: NTS UNLESS NOTED

8/31/2022 2:17 PM SAM c:\users\sam\engineering express\production - documents\projects\20-29229 oldcastle - fg 5000 & fg 5100\revision order 8879\work\drawings & cad\fg-5750t\20-29229g obe - fg-5750tg 8-24-22.dwg

MAXIMUM ALLOWABLE STRESS DESIGN PRESSURE RATING FOR STANDARD MULLIONS WITH HEAD, SILL AND JAMB CONNECTIONS-ANCHOR TYPE D

FRAME HEIGHT (IN)	TRIBUTARY WIDTH (IN)	TOTAL NUMBER OF ANCHORS AT THE CLUSTER-ANCHOR TYPE D													
		2		4		6		8		10		12		16	
		MAX PRESSURE (PSF)	JAMBS MAX ANCHOR SPACING (IN)	MAX PRESSURE (PSF)	JAMBS MAX ANCHOR SPACING (IN)	MAX PRESSURE (PSF)	JAMBS MAX ANCHOR SPACING (IN)	MAX PRESSURE (PSF)	JAMBS MAX ANCHOR SPACING (IN)	MAX PRESSURE (PSF)	JAMBS MAX ANCHOR SPACING (IN)	MAX PRESSURE (PSF)	JAMBS MAX ANCHOR SPACING (IN)	MAX PRESSURE (PSF)	JAMBS MAX ANCHOR SPACING (IN)
36	24	90	18" O.C.	90	18" O.C.	90	18" O.C.	90	18" O.C.	90	18" O.C.	90	18" O.C.	90	18" O.C.
	36	68	18" O.C.	90	18" O.C.	90	18" O.C.	90	18" O.C.	90	18" O.C.	90	18" O.C.	90	18" O.C.
	48	51	18" O.C.	90	18" O.C.	90	18" O.C.	90	18" O.C.	90	18" O.C.	90	18" O.C.	90	18" O.C.
	60	41	18" O.C.	82	18" O.C.	90	12" O.C.	90	12" O.C.	90	12" O.C.	90	12" O.C.	90	12" O.C.
	72	34	18" O.C.	68	18" O.C.	90	12" O.C.	90	12" O.C.	90	12" O.C.	90	12" O.C.	90	12" O.C.
	78	31	18" O.C.	63	18" O.C.	90	12" O.C.	90	12" O.C.	90	12" O.C.	90	12" O.C.	90	12" O.C.
48	24	77	24" O.C.	90	24" O.C.	90	24" O.C.	90	24" O.C.	90	24" O.C.	90	24" O.C.	90	24" O.C.
	36	51	24" O.C.	90	24" O.C.	90	24" O.C.	90	24" O.C.	90	24" O.C.	90	24" O.C.	90	24" O.C.
	48	38	24" O.C.	77	24" O.C.	90	16" O.C.	90	16" O.C.	90	16" O.C.	90	16" O.C.	90	16" O.C.
	60	31	24" O.C.	62	24" O.C.	90	16" O.C.	90	16" O.C.	90	16" O.C.	90	16" O.C.	90	16" O.C.
	72	25	24" O.C.	51	24" O.C.	77	16" O.C.	90	12" O.C.	90	12" O.C.	90	12" O.C.	90	12" O.C.
	78	23	24" O.C.	47	24" O.C.	71	16" O.C.	90	12" O.C.	90	12" O.C.	90	12" O.C.	90	12" O.C.
60	24	62	30" O.C.	90	30" O.C.	90	30" O.C.	90	30" O.C.	90	30" O.C.	90	30" O.C.	90	30" O.C.
	36	41	30" O.C.	82	30" O.C.	90	20" O.C.	90	20" O.C.	90	20" O.C.	90	20" O.C.	90	20" O.C.
	48	31	30" O.C.	62	30" O.C.	90	20" O.C.	90	20" O.C.	90	20" O.C.	90	20" O.C.	90	20" O.C.
	60	24	30" O.C.	49	30" O.C.	74	20" O.C.	90	15" O.C.	90	15" O.C.	90	15" O.C.	90	15" O.C.
	72	20	30" O.C.	41	30" O.C.	62	20" O.C.	82	15" O.C.	90	12" O.C.	90	12" O.C.	90	12" O.C.
	78	19	30" O.C.	38	30" O.C.	57	20" O.C.	76	15" O.C.	90	12" O.C.	90	12" O.C.	90	12" O.C.
72	24	51	36" O.C.	90	36" O.C.	90	36" O.C.	90	36" O.C.	90	36" O.C.	90	36" O.C.	90	36" O.C.
	36	34	36" O.C.	68	36" O.C.	90	24" O.C.	90	24" O.C.	90	24" O.C.	90	24" O.C.	90	24" O.C.
	48	25	36" O.C.	51	36" O.C.	77	24" O.C.	90	18" O.C.	90	18" O.C.	90	18" O.C.	90	18" O.C.
	60	20	36" O.C.	41	36" O.C.	62	24" O.C.	82	18" O.C.	90	14" O.C.	90	14" O.C.	90	14" O.C.
	72	17	36" O.C.	34	36" O.C.	51	24" O.C.	68	18" O.C.	86	14" O.C.	90	12" O.C.	90	12" O.C.
	78	15	36" O.C.	31	36" O.C.	47	24" O.C.	63	18" O.C.	79	14" O.C.	90	12" O.C.	90	12" O.C.

Frank Bennardo
PE# 0046549 CA# 9885

AUGUST 31, 2022

FRANK L. BENNARDO LICENSE No. PE0046549 STATE OF FLORIDA PROFESSIONAL ENGINEER

FL#20665.3

ENGINEERING EXPRESS®
POSTAL ADDRESS:
401 W. ATLANTIC AVE R10 #219
DELRAY BEACH, FL 33444
ENGINEERINGEXPRESS.COM

OLDCASTLE BUILDING ENVELOPE®
803 AIRPORT ROAD
TERRELL, TX 75160
(972) 551-6100

FG-5750 STOREMAX® THERMAL IMPACT STOREFRONT SYSTEM WET & DRY GLAZED

REMARKS	DRWN	CHKD	DATE
INIT ISSUE	JEM	AJP	07/23/20
REVISIONS	SSQ	RS	03/11/22
-	-	-	-
-	-	-	-
-	-	-	-

COPYRIGHT ENGINEERING EXPRESS®

20-29229g

SCALE: NTS UNLESS NOTED

8/31/2022 2:17 PM SAM c:\users\sam\engineering express\production - documents\projects\20-\20-29229 oldcastle - fg 5000 & fg 5100\revision order 8879\work\drawings & cad\fg-5750t\20-29229g obe - fg-5750tg 8-24-22.dwg

MAXIMUM ALLOWABLE STRESS DESIGN PRESSURE RATING FOR STANDARD MULLIONS WITH HEAD, SILL AND JAMB CONNECTIONS-ANCHOR TYPE D

FRAME HEIGHT (IN)	TRIBUTARY WIDTH (IN)	TOTAL NUMBER OF ANCHORS AT THE CLUSTER-ANCHOR TYPE D													
		2		4		6		8		10		12		16	
		MAX PRESSURE (PSF)	JAMBS MAX ANCHOR SPACING (IN)	MAX PRESSURE (PSF)	JAMBS MAX ANCHOR SPACING (IN)	MAX PRESSURE (PSF)	JAMBS MAX ANCHOR SPACING (IN)	MAX PRESSURE (PSF)	JAMBS MAX ANCHOR SPACING (IN)	MAX PRESSURE (PSF)	JAMBS MAX ANCHOR SPACING (IN)	MAX PRESSURE (PSF)	JAMBS MAX ANCHOR SPACING (IN)	MAX PRESSURE (PSF)	JAMBS MAX ANCHOR SPACING (IN)
84	24	44	42" O.C.	88	42" O.C.	90	28" O.C.	90	28" O.C.	90	28" O.C.	90	28" O.C.	90	28" O.C.
	36	29	42" O.C.	59	42" O.C.	88	28" O.C.	90	21" O.C.	90	21" O.C.	90	21" O.C.	90	21" O.C.
	48	22	42" O.C.	44	42" O.C.	66	28" O.C.	88	21" O.C.	90	17" O.C.	90	17" O.C.	90	17" O.C.
	60	17	42" O.C.	35	42" O.C.	53	28" O.C.	70	21" O.C.	88	17" O.C.	90	14" O.C.	90	14" O.C.
	72	14	42" O.C.	29	42" O.C.	44	28" O.C.	59	21" O.C.	73	17" O.C.	88	14" O.C.	90	12" O.C.
	78	13	42" O.C.	27	42" O.C.	40	28" O.C.	54	21" O.C.	68	17" O.C.	81	14" O.C.	90	12" O.C.
96	24	38	48" O.C.	77	48" O.C.	90	32" O.C.	90	32" O.C.	90	32" O.C.	90	32" O.C.	90	32" O.C.
	36	25	48" O.C.	51	48" O.C.	77	32" O.C.	90	24" O.C.	90	24" O.C.	90	24" O.C.	90	24" O.C.
	48	19	48" O.C.	38	48" O.C.	58	32" O.C.	77	24" O.C.	90	19" O.C.	90	19" O.C.	90	19" O.C.
	60	15	48" O.C.	31	48" O.C.	46	32" O.C.	62	24" O.C.	77	19" O.C.	90	16" O.C.	90	16" O.C.
	72	12	48" O.C.	25	48" O.C.	38	32" O.C.	51	24" O.C.	64	19" O.C.	77	16" O.C.	90	14" O.C.
	78	11	48" O.C.	23	48" O.C.	35	32" O.C.	47	24" O.C.	59	19" O.C.	71	16" O.C.	90	12" O.C.
108	24	34	54" O.C.	68	54" O.C.	90	36" O.C.	90	36" O.C.	90	36" O.C.	90	36" O.C.	90	36" O.C.
	36	22	54" O.C.	45	54" O.C.	68	36" O.C.	90	27" O.C.	90	27" O.C.	90	27" O.C.	90	27" O.C.
	48	17	54" O.C.	34	54" O.C.	51	36" O.C.	68	27" O.C.	86	22" O.C.	90	18" O.C.	90	18" O.C.
	60	13	54" O.C.	27	54" O.C.	41	36" O.C.	55	27" O.C.	68	22" O.C.	82	18" O.C.	90	15" O.C.
	72	11	54" O.C.	22	54" O.C.	34	36" O.C.	45	27" O.C.	57	22" O.C.	68	18" O.C.	90	14" O.C.
	78	10	54" O.C.	21	54" O.C.	31	36" O.C.	42	27" O.C.	52	22" O.C.	63	18" O.C.	84	14" O.C.
120	24	31	60" O.C.	62	60" O.C.	90	40" O.C.	90	40" O.C.	90	40" O.C.	90	40" O.C.	90	40" O.C.
	36	20	60" O.C.	41	60" O.C.	62	40" O.C.	82	30" O.C.	90	24" O.C.	90	24" O.C.	90	24" O.C.
	48	15	60" O.C.	31	60" O.C.	46	40" O.C.	62	30" O.C.	77	24" O.C.	90	20" O.C.	90	20" O.C.
	60	12	60" O.C.	24	60" O.C.	37	40" O.C.	49	30" O.C.	62	24" O.C.	74	20" O.C.	90	15" O.C.
	72	10	60" O.C.	20	60" O.C.	31	40" O.C.	41	30" O.C.	51	24" O.C.	62	20" O.C.	82	15" O.C.
	78	9	60" O.C.	19	60" O.C.	28	40" O.C.	38	30" O.C.	47	24" O.C.	57	20" O.C.	76	15" O.C.

Frank Bennardo
PE# 0046549 CA# 9885

AUGUST 31, 2022

FRANK L. BENNARDO LICENSE No. PE0046549 STATE OF FLORIDA PROFESSIONAL ENGINEER

FL#20665.3

ENGINEERING EXPRESS®
POSTAL ADDRESS:
401 W. ATLANTIC AVE R10 #219
DELRAY BEACH, FL 33444
ENGINEERINGEXPRESS.COM

OLDCASTLE BUILDING ENVELOPE®
803 AIRPORT ROAD
TERRELL, TX 75160
(972) 551-6100

FG-5750 STOREMAX® THERMAL IMPACT STOREFRONT SYSTEM WET & DRY GLAZED

REMARKS	DRWN	CHKD	DATE
INIT ISSUE	JEM	AJP	07/23/20
REVISIONS	SSQ	RS	03/11/22
-	-	-	-
-	-	-	-
-	-	-	-

COPYRIGHT ENGINEERING EXPRESS®

20-29229g

SCALE: NTS UNLESS NOTED

8/31/2022 2:17 PM SAM c:\users\sam\engineering express\production - documents\projects\20-\20-29229 oldcastle - fg 5000 & fg 5100\revision order 8879\work\drawings & cad\fg-5750t\20-29229g obe - fg-5750tg 8-24-22.dwg

MAXIMUM ALLOWABLE STRESS DESIGN PRESSURE RATING FOR STANDARD MULLIONS WITH HEAD, SILL AND JAMB CONNECTIONS-ANCHOR TYPE D

FRAME HEIGHT (IN)	TRIBUTARY WIDTH (IN)	TOTAL NUMBER OF ANCHORS AT THE CLUSTER-ANCHOR TYPE D													
		2		4		6		8		10		12		16	
		MAX PRESSURE (PSF)	JAMBS MAX ANCHOR SPACING (IN)	MAX PRESSURE (PSF)	JAMBS MAX ANCHOR SPACING (IN)	MAX PRESSURE (PSF)	JAMBS MAX ANCHOR SPACING (IN)	MAX PRESSURE (PSF)	JAMBS MAX ANCHOR SPACING (IN)	MAX PRESSURE (PSF)	JAMBS MAX ANCHOR SPACING (IN)	MAX PRESSURE (PSF)	JAMBS MAX ANCHOR SPACING (IN)	MAX PRESSURE (PSF)	JAMBS MAX ANCHOR SPACING (IN)
132	24	28	66" O.C.	56	66" O.C.	84	44" O.C.	90	33" O.C.	90	33" O.C.	90	33" O.C.	90	33" O.C.
	36	18	66" O.C.	37	66" O.C.	56	44" O.C.	75	33" O.C.	90	26" O.C.	90	26" O.C.	90	26" O.C.
	48	14	66" O.C.	28	66" O.C.	42	44" O.C.	56	33" O.C.	70	26" O.C.	84	22" O.C.	90	19" O.C.
	60	11	66" O.C.	22	66" O.C.	33	44" O.C.	45	33" O.C.	56	26" O.C.	67	22" O.C.	90	17" O.C.
	72	9	66" O.C.	18	66" O.C.	28	44" O.C.	37	33" O.C.	46	26" O.C.	56	22" O.C.	75	17" O.C.
	78	8	66" O.C.	17	66" O.C.	26	44" O.C.	34	33" O.C.	43	26" O.C.	52	22" O.C.	69	17" O.C.
144	24	25	72" O.C.	51	72" O.C.	77	48" O.C.	90	36" O.C.	90	36" O.C.	90	36" O.C.	90	36" O.C.
	36	17	72" O.C.	34	72" O.C.	51	48" O.C.	68	36" O.C.	86	29" O.C.	90	24" O.C.	90	24" O.C.
	48	12	72" O.C.	25	72" O.C.	38	48" O.C.	51	36" O.C.	64	29" O.C.	77	24" O.C.	90	21" O.C.
	60	10	72" O.C.	20	72" O.C.	31	48" O.C.	41	36" O.C.	51	29" O.C.	62	24" O.C.	82	18" O.C.
	72	8	72" O.C.	17	72" O.C.	25	48" O.C.	34	36" O.C.	43	29" O.C.	51	24" O.C.	68	18" O.C.
	78	7	72" O.C.	15	72" O.C.	23	48" O.C.	31	36" O.C.	39	29" O.C.	47	24" O.C.	63	18" O.C.

Frank Bennardo
PE# 0046549 CA# 9885

AUGUST 31, 2022

FRANK L. BENNARDO LICENSE No. PE0046549 STATE OF FLORIDA PROFESSIONAL ENGINEER

FL#20665.3

ENGINEERING EXPRESS®
POSTAL ADDRESS:
401 W. ATLANTIC AVE R10 #219
DELRAY BEACH, FL 33444
ENGINEERINGEXPRESS.COM

OLDCASTLE BUILDING ENVELOPE®
803 AIRPORT ROAD
TERRELL, TX 75160
(972) 551-6100

FG-5750 STOREMAX® THERMAL IMPACT STOREFRONT SYSTEM WET & DRY GLAZED

REMARKS	DRWN	CHKD	DATE
INIT ISSUE	JEM	AJP	07/23/20
REVISIONS	SSQ	RS	03/11/22
-	-	-	-
-	-	-	-
-	-	-	-

COPYRIGHT ENGINEERING EXPRESS®

20-29229g

SCALE: NTS UNLESS NOTED

8/31/2022 2:18 PM SAM c:\users\sam\engineering express\production - documents\projects\20-\20-29229 oldcastle - fg 5000 & fg 5100\revision order 8879\work\drawings & cad\fg-5750t\20-29229g obe - fg-5750tg 8-24-22.dwg

c:\users\sam\engineering express\production - documents\projects\20-\20-29229 oldcastle - fg 5000 & fg 5100\revision order 8879\work\drawings & cad\fg-5750t\20-29229g obe - fg-5750tg 8-24-22.dwg
8/31/2022 2:18 PM SAM

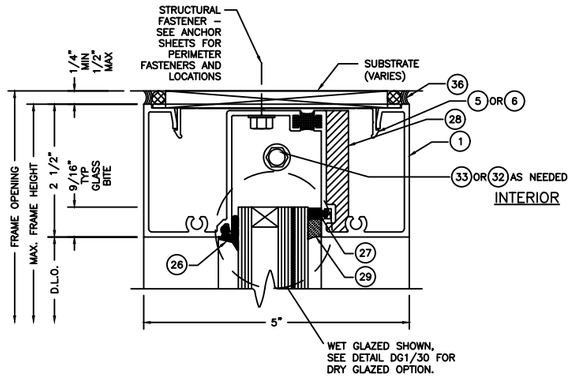

1/30 HEAD

LIMITED TO +70 / -70 P.S.F

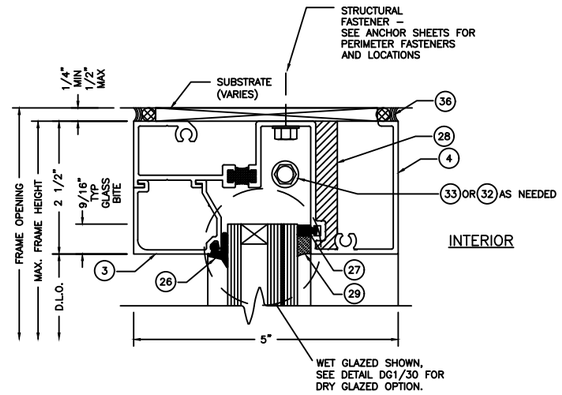

4/30 INVERTED HEAD

LIMITED TO +70 / -70 P.S.F

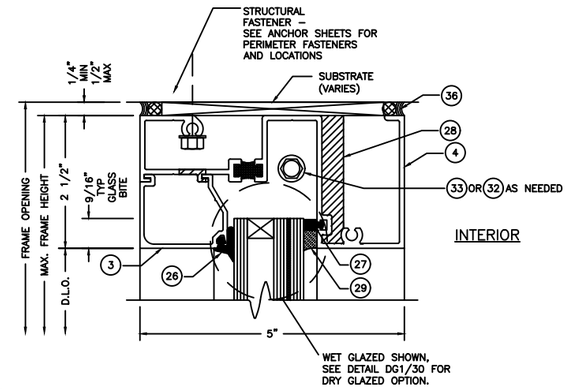

4A/30 ALTERNATE INVERTED HEAD

LIMITED TO +70 / -70 P.S.F

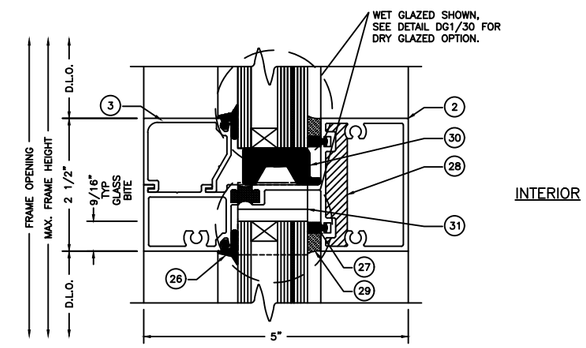

2/30 INTERMEDIATE HORIZONTAL

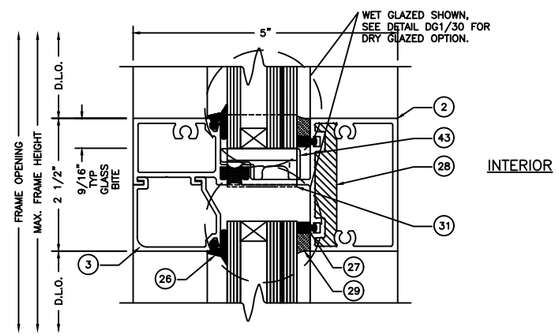

5/30 INVERTED INTERMEDIATE HORIZONTAL

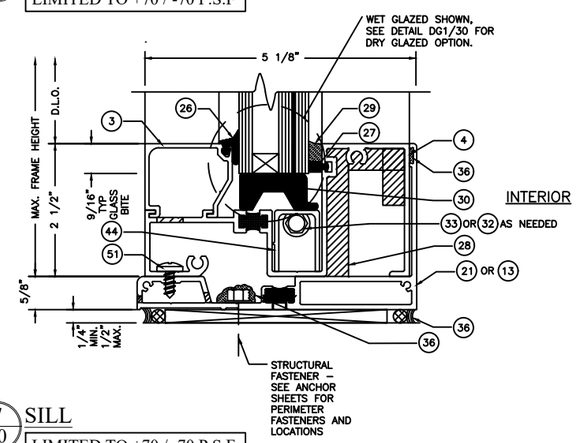

7/30 SILL

LIMITED TO +70 / -70 P.S.F

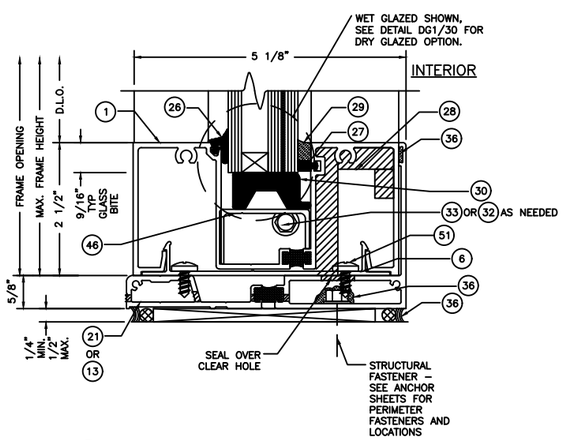

6/30 INVERTED SILL

LIMITED TO +70 / -70 P.S.F

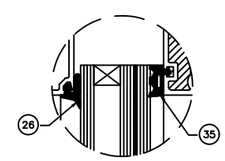

DG1/30 DRY GLAZED OPTION

LOCATE REINFORCEMENT FASTENERS
1-1/4" FROM EACH END.

Frank Bennardo
PE# 0046549 CA# 9885

AUGUST 31, 2022

FRANK L. BENNARDO LICENSE No. PE0046549 STATE OF FLORIDA PROFESSIONAL ENGINEER

FL#20665.3

ENGINEERING EXPRESS®
POSTAL ADDRESS:
401 W. ATLANTIC AVE R10 #219
DELRAY BEACH, FL 33444
ENGINEERINGEXPRESS.COM

OLDCASTLE BUILDING ENVELOPE®
803 AIRPORT ROAD
TERRELL, TX 75160
(972) 551-6100

FG-5750 STOREMAX® THERMAL IMPACT STOREFRONT SYSTEM WET & DRY GLAZED

REMARKS	DRWN	CHKD	DATE
INIT ISSUE	JEM	AJP	07/23/20
REVISIONS	SSQ	RS	03/11/22
-	-	-	-
-	-	-	-
-	-	-	-

COPYRIGHT ENGINEERING EXPRESS®

20-29229g

SCALE: NTS UNLESS NOTED

c:\users\sam\engineering express\production - documents\projects\20-\20-29229 oldcastle - fg 5000 & fg 5100\revision order 8879\work\drawings & cad\fg-5750t\20-29229g obe - fg-5750tg 8-24-22.dwg
8/31/2022 2:18 PM SAM

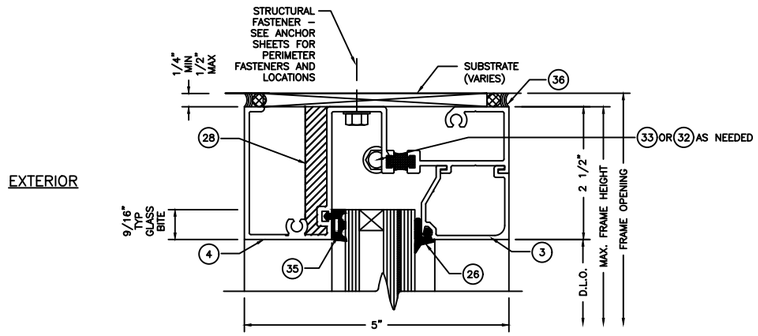

9/31 INSIDE GLAZED HEAD

LIMITED TO +70 / -70 P.S.F

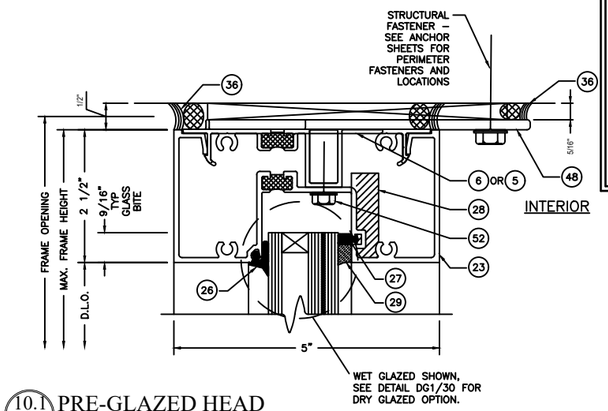

10.1/31 PRE-GLAZED HEAD

LIMITED TO +75 / -75 P.S.F

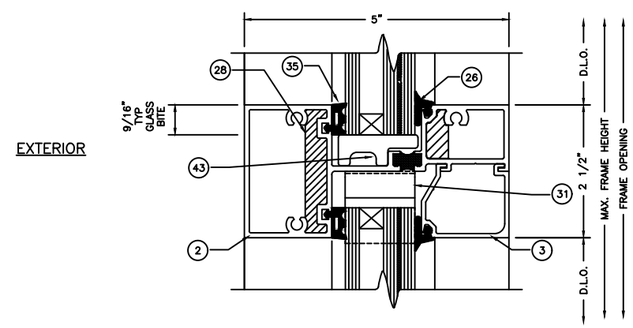

10/31 INSIDE GLAZED INTERMEDIATE HORIZONTAL

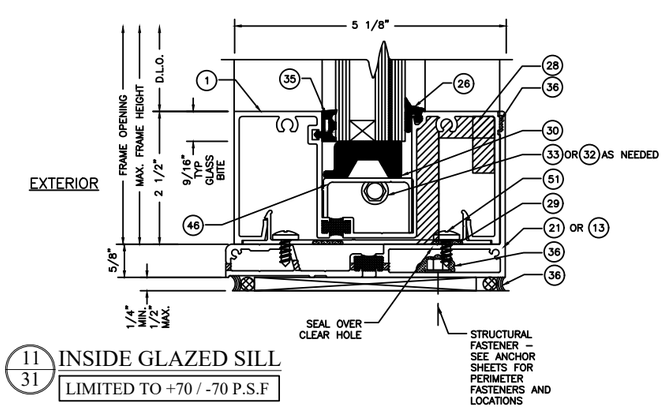

11/31 INSIDE GLAZED SILL

LIMITED TO +70 / -70 P.S.F

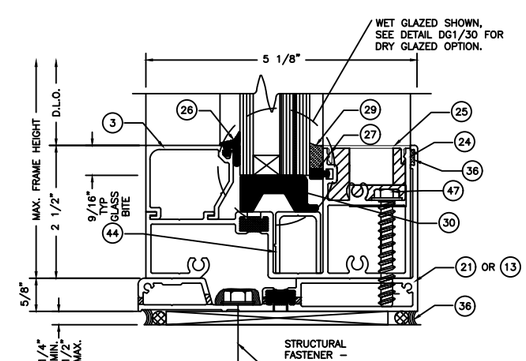

11.1/31 PRE-GLAZED SILL

LIMITED TO +75 / -75 P.S.F

LOCATE REINFORCEMENT FASTENERS
1-1/4" FROM EACH END.

Frank Bennardo
PE# 0046549 CA# 9885

AUGUST 31, 2022

FRANK L. BENNARDO LICENSE No. PE0046549 STATE OF FLORIDA PROFESSIONAL ENGINEER

FL#20665.3

ENGINEERING EXPRESS®
POSTAL ADDRESS:
401 W. ATLANTIC AVE R10 #219
DELRAY BEACH, FL 33444
ENGINEERINGEXPRESS.COM

OLDCASTLE BUILDING ENVELOPE®
803 AIRPORT ROAD
TERRELL, TX 75160
(972) 551-6100

FG-5750 STOREMAX® THERMAL IMPACT STOREFRONT SYSTEM WET & DRY GLAZED

REMARKS	DRWN	CHKD	DATE
INIT ISSUE	JEM	AJP	07/23/20
REVISIONS	SSQ	RS	03/11/22
-	-	-	-
-	-	-	-
-	-	-	-

COPYRIGHT ENGINEERING EXPRESS®

20-29229g

SCALE: NTS UNLESS NOTED

c:\users\sam\engineering express\production - documents\projects\20-\20-29229 oldcastle - fg 5000 & fg 5100\revision order 8879\work\drawings & cad\fg-5750t\20-29229g obe - fg-5750tg 8-24-22.dwg
8/31/2022 2:18 PM SAM

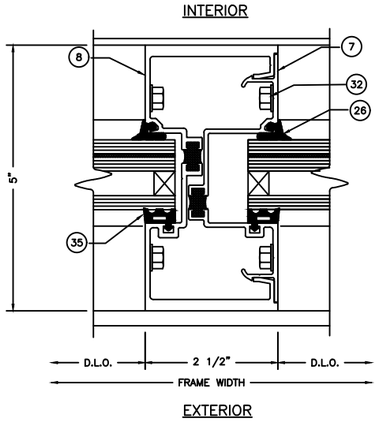

12/32 INSIDE SET VERTICAL
M1

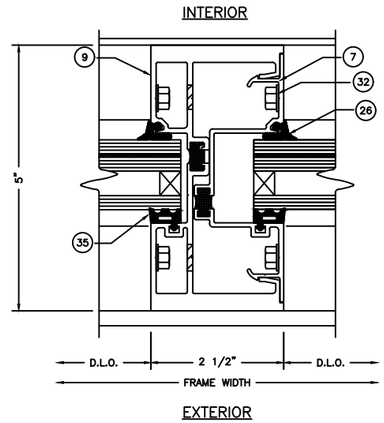

13/32 INSIDE SET HEAVY VERTICAL
M3

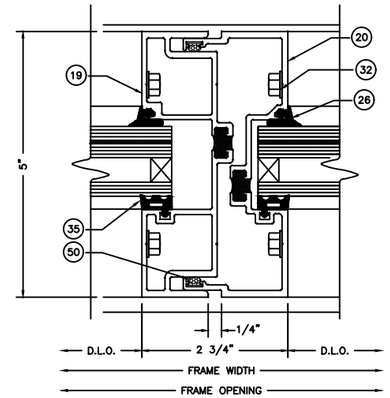

14/32 INSIDE SET EXPANSION VERTICAL
M2

NOTE: APPROVED FOR USE OUTSIDE HVHZ

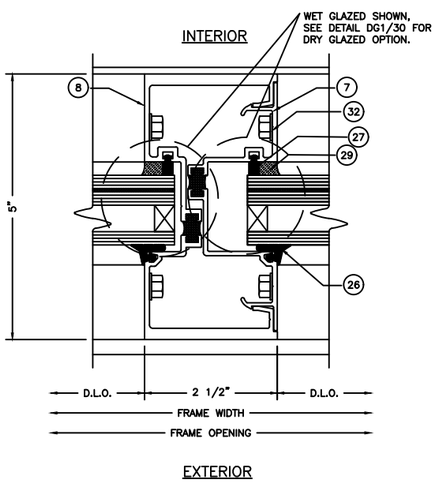

16/32 STANDARD VERTICAL
M1

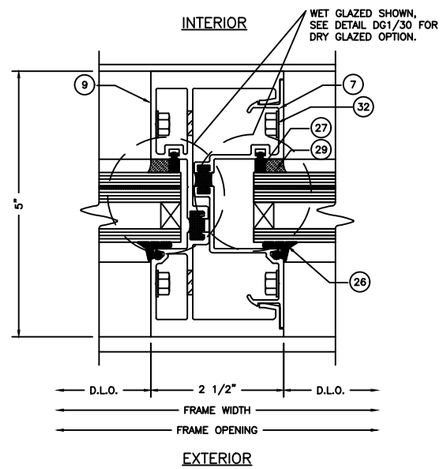

17/32 HEAVY VERTICAL
M4

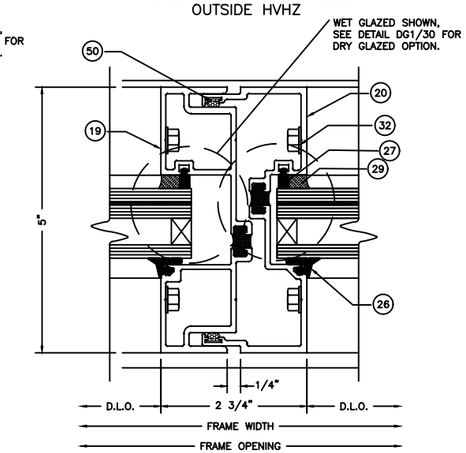

18/32 EXPANSION VERTICAL
M2 NOTE: APPROVED FOR USE OUTSIDE HVHZ

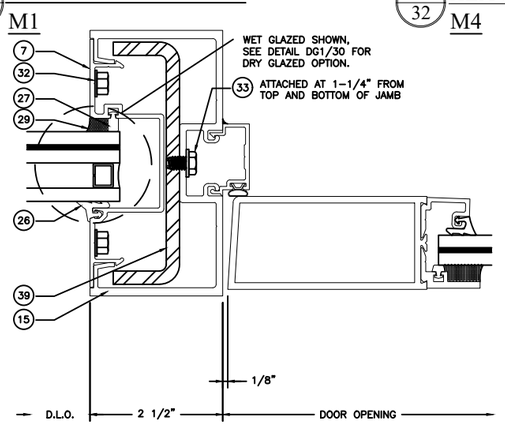

16.1/32 INTERMEDIATE DOOR JAMB AT SIDELITE
M8

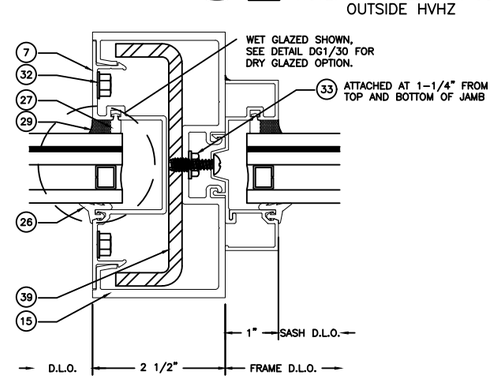

16.2/32 INTERMEDIATE TRANSOM MULLION AT SIDELITE
M8

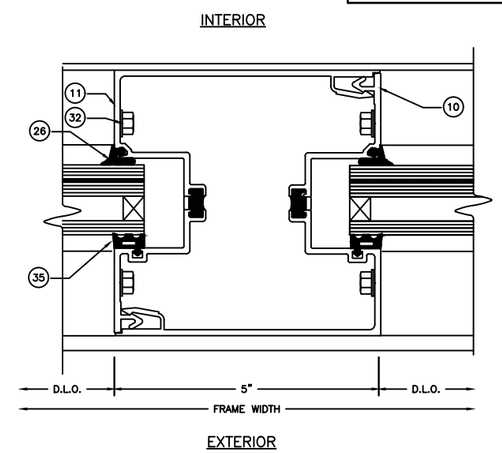

15/32 INSIDE SET 5" VERTICAL MULLION
M7

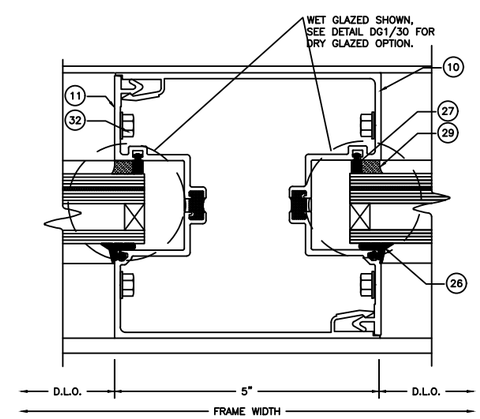

19/32 5" VERTICAL MULLION
M7

Frank Bennardo
PE# 0046549 CA# 9885

AUGUST 31, 2022

FRANK L. BENNARDO LICENSE No. PE0046549 STATE OF FLORIDA PROFESSIONAL ENGINEER

FL#20665.3

ENGINEERING EXPRESS®
POSTAL ADDRESS:
401 W. ATLANTIC AVE R10 #219
DELRAY BEACH, FL 33444
ENGINEERINGEXPRESS.COM

OLDCASTLE BUILDING ENVELOPE®
803 AIRPORT ROAD
TERRELL, TX 75160
(972) 551-6100

FG-5750 STOREMAX® THERMAL IMPACT STOREFRONT SYSTEM WET & DRY GLAZED

REMARKS	DRWN	CHKD	DATE
INIT ISSUE	JEM	AJP	07/23/20
REVISIONS	SSQ	RS	03/11/22
-	-	-	-
-	-	-	-
-	-	-	-

COPYRIGHT ENGINEERING EXPRESS®

20-29229g

SCALE: NTS UNLESS NOTED

c:\users\sam\engineering express\production - documents\projects\20-\20-29229 oldcastle - fg 5000 & fg 5100\revision order 8879\work\drawings & cad\fg-5750t\20-29229g obe - fg-5750tg 8-24-22.dwg
8/31/2022 2:18 PM SAM

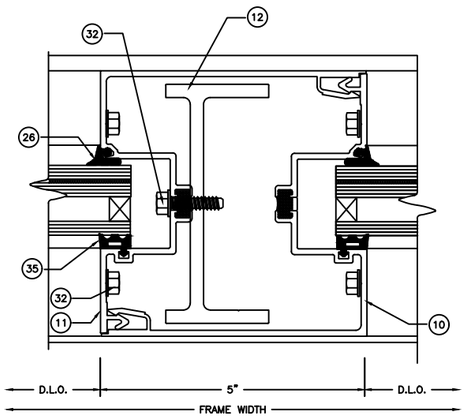

20/33 INSIDE SET 5" VERTICAL MULLION WITH FG-5720 REINFORCEMENT

NOTE:
MULLION CAN BE USED UNDER SITE SPECIFIC ENGINEERING AND SHALL BE APPROVED BY THE AUTHORITY HAVING JURISDICTION (AHJ).

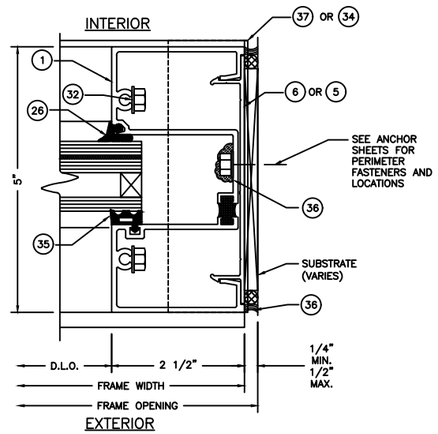

21/33 INSIDE SET JAMB VERTICAL

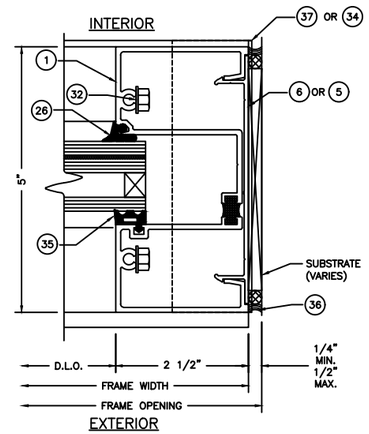

21.1/33 INSIDE SET JAMB VERTICAL (NON ANCHORED)
J1

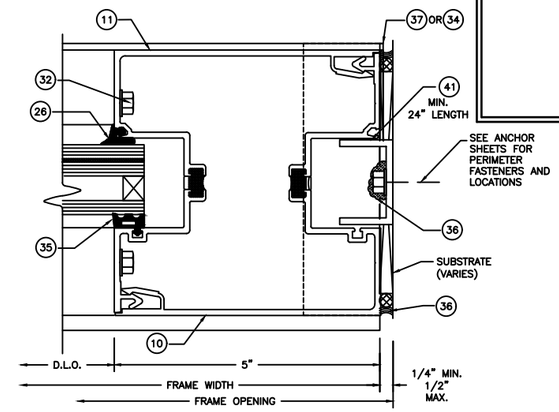

22/33 INSIDE SET 5" JAMB VERTICAL

NOTE:
MULLION CAN BE USED UNDER SITE SPECIFIC ENGINEERING AND SHALL BE APPROVED BY THE AUTHORITY HAVING JURISDICTION (AHJ).

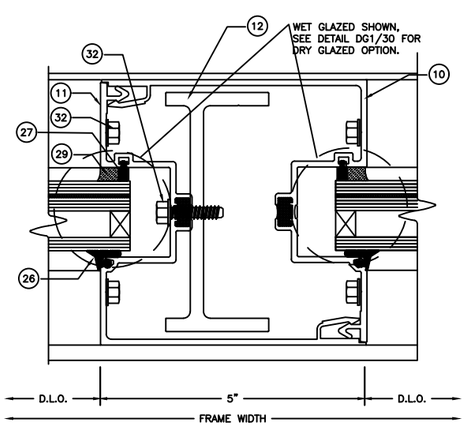

23/33 5" VERTICAL MULLION WITH FG-5720 REINFORCEMENT

NOTE:
MULLION CAN BE USED UNDER SITE SPECIFIC ENGINEERING AND SHALL BE APPROVED BY THE AUTHORITY HAVING JURISDICTION (AHJ).

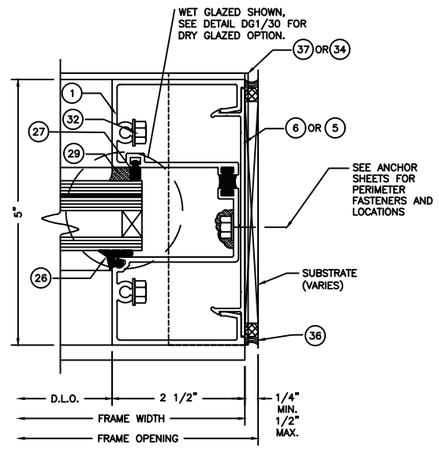

24/33 JAMB VERTICAL

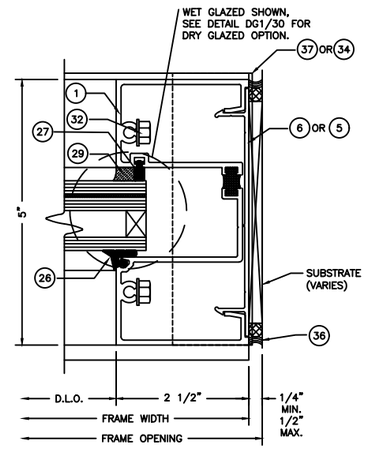

24.1/33 JAMB VERTICAL (NON ANCHORED)
J1

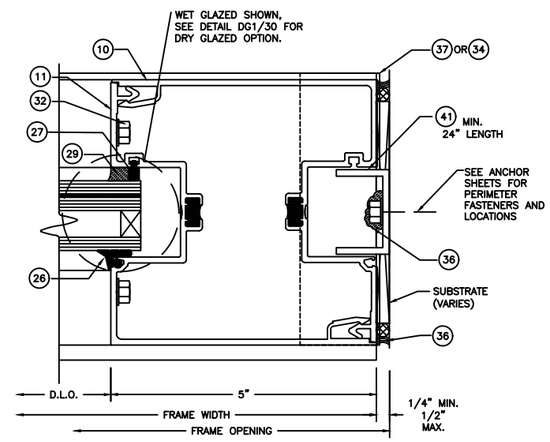

25/33 5" JAMB VERTICAL

NOTE:
MULLION CAN BE USED UNDER SITE SPECIFIC ENGINEERING AND SHALL BE APPROVED BY THE AUTHORITY HAVING JURISDICTION (AHJ).

LOCATE REINFORCEMENT FASTENERS 1-1/4" FROM EACH END.

Frank Bennardo
PE# 0046549 CA# 9885

AUGUST 31, 2022

FRANK L. BENNARDO LICENSE No. PE0046549 STATE OF FLORIDA PROFESSIONAL ENGINEER

FL#20665.3

ENGINEERING EXPRESS®
POSTAL ADDRESS:
401 W. ATLANTIC AVE R10 #219
DELRAY BEACH, FL 33444
ENGINEERINGEXPRESS.COM

OLDCASTLE BUILDING ENVELOPE®
803 AIRPORT ROAD
TERRELL, TX 75160
(972) 551-6100

FG-5750 STOREMAX® THERMAL IMPACT STOREFRONT SYSTEM WET & DRY GLAZED

REMARKS	DRWN	CHKD	DATE
INIT ISSUE	JEM	AJP	07/23/20
REVISIONS	SSQ	RS	03/11/22
-	-	-	-
-	-	-	-
-	-	-	-

COPYRIGHT ENGINEERING EXPRESS®

20-29229g

SCALE: NTS UNLESS NOTED

8/31/2022 2:18 PM SAM c:\users\sam\engineering express\production - documents\projects\20-\20-29229 oldcastle - fg 5000 & fg 5100\revision order 8879\work\drawings & cad\fg-5750t\20-29229g obe - fg-5750tg 8-24-22.dwg

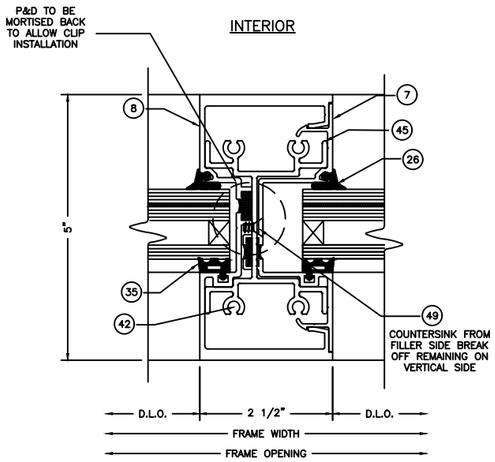

26/34 INSIDE SET CRIPPLED VERTICAL

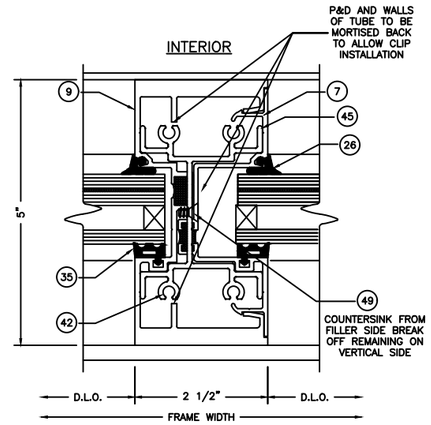

27/34 INSIDE SET CRIPPLED HEAVY VERTICAL

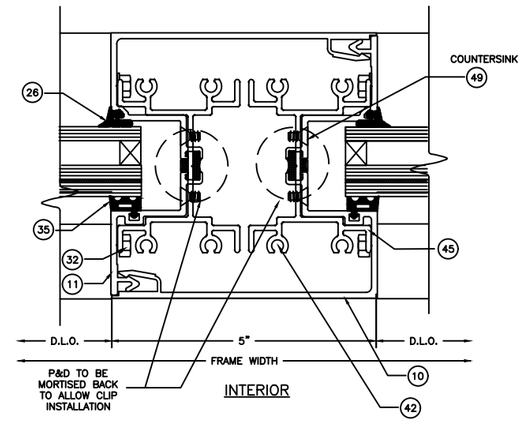

28/34 INSIDE SET CRIPPLED 5" VERTICAL MULLION

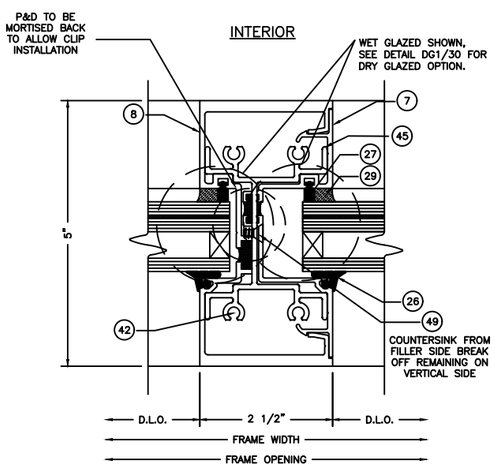

29/34 CRIPPLED VERTICAL

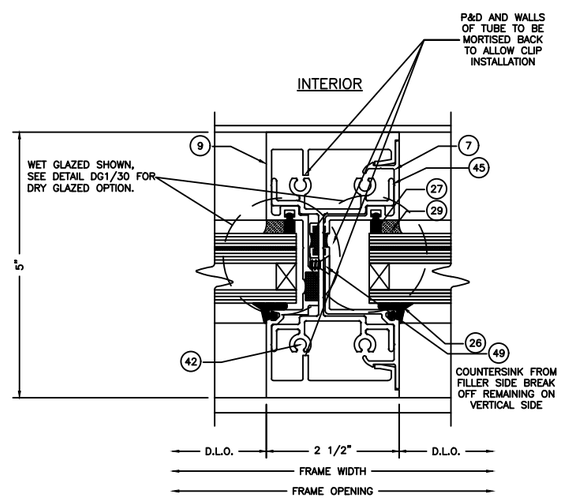

30/34 CRIPPLED HEAVY VERTICAL

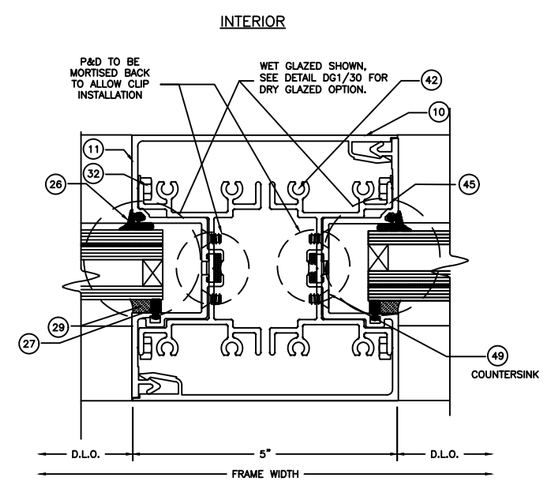

31/34 CRIPPLED 5" VERTICAL MULLION

SHEAR BLOCKS USE FOUR (4) ㊷ FASTENERS EACH.	NOTE: CRIPPLED VERTICAL MULLIONS SHOWN HEREIN CAN BE USED UNDER SITE SPECIFIC ENGINEERING AND SHALL BE APPROVED BY THE AUTHORITY HAVING JURISDICTION (AHJ).

Frank Bennardo
PE# 0046549 CA# 9885

AUGUST 31, 2022

FRANK L. BENNARDO LICENSE No. PE0046549 STATE OF FLORIDA PROFESSIONAL ENGINEER

FL#20665.3

ENGINEERING EXPRESS®
POSTAL ADDRESS:
401 W. ATLANTIC AVE R10 #219
DELRAY BEACH, FL 33444
ENGINEERINGEXPRESS.COM

OLDCASTLE BUILDING ENVELOPE®
803 AIRPORT ROAD
TERRELL, TX 75160
(972) 551-6100

FG-5750 STOREMAX® THERMAL IMPACT STOREFRONT SYSTEM WET & DRY GLAZED

REMARKS	DRWN	CHKD	DATE
INIT ISSUE	JEM	AJP	07/23/20
REVISIONS	SSQ	RS	03/11/22
-	-	-	-
-	-	-	-
-	-	-	-

COPYRIGHT ENGINEERING EXPRESS®

20-29229g

SCALE: NTS UNLESS NOTED

c:\users\sam\engineering express\production - documents\projects\20-\20-29229 oldcastle - fg 5000 & fg 5100\revision order 8879\work\drawings & cad\fg-5750t\20-29229g obe - fg-5750tg 8-24-22.dwg
8/31/2022 2:18 PM SAM

Frank Bennardo
PE# 0046549 CA# 9885

AUGUST 31, 2022

FRANK L. BENNARDO LICENSE No. PE0046549 STATE OF FLORIDA PROFESSIONAL ENGINEER

FL#20665.3

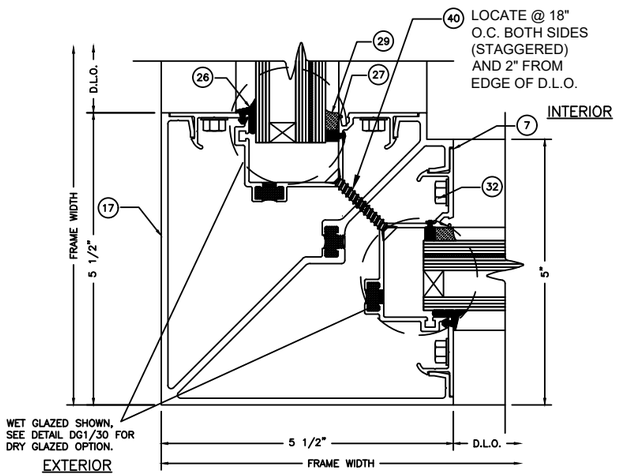

32/35 90° CORNER POST
M5
NOTE: APPROVED FOR USE OUTSIDE HVHZ

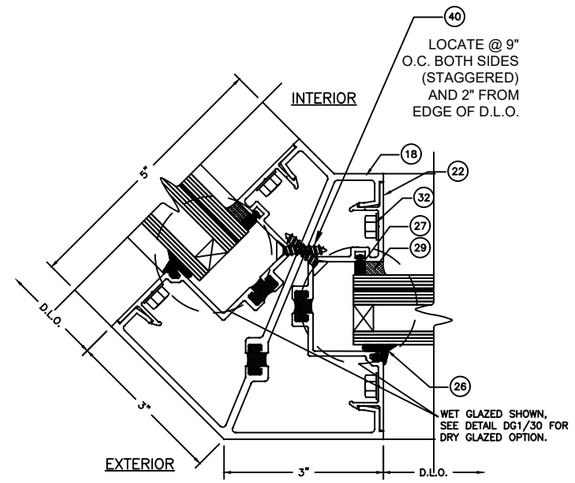

33/35 135° CORNER POST
M6
NOTE: APPROVED FOR USE OUTSIDE HVHZ

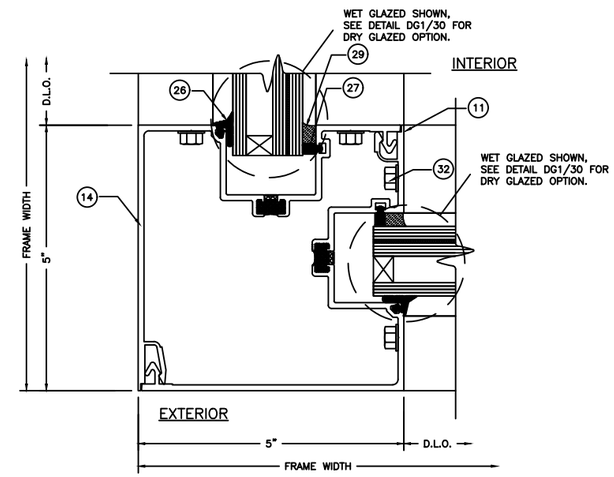

34/35 90° CORNER POST
NOTE:
MULLION CAN BE USED UNDER SITE SPECIFIC ENGINEERING AND SHALL BE APPROVED BY THE AUTHORITY HAVING JURISDICTION (AHJ).

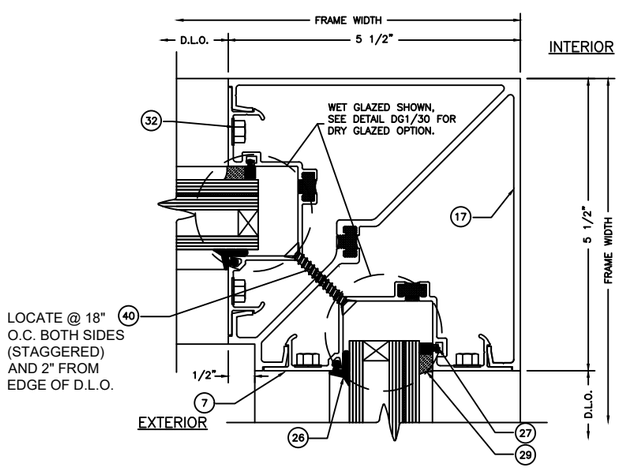

35/35 90° INSIDE CORNER POST
M5
NOTE: APPROVED FOR USE OUTSIDE HVHZ

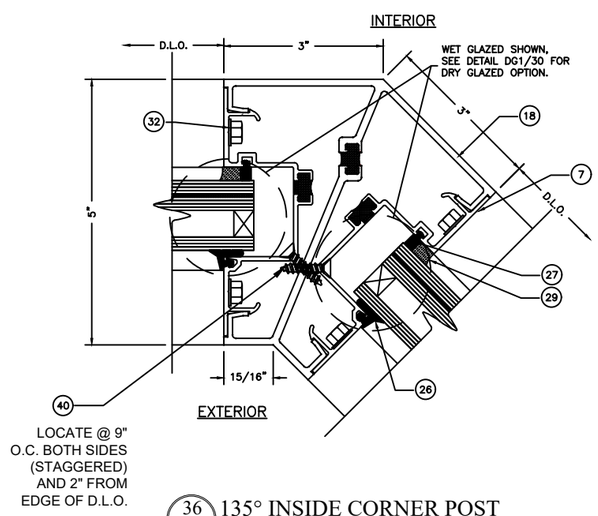

36/35 135° INSIDE CORNER POST
M6
NOTE: APPROVED FOR USE OUTSIDE HVHZ

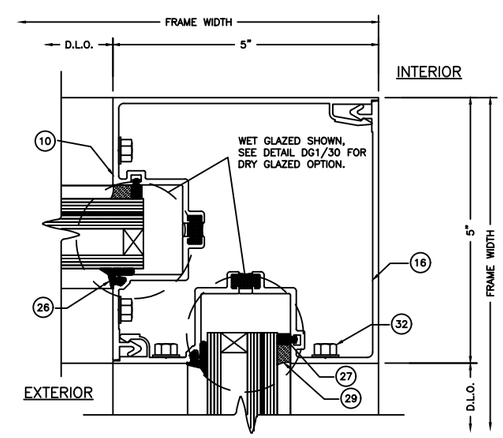

37/35 INSIDE 90° CORNER ASSEMBLY
NOTE:
MULLION CAN BE USED UNDER SITE SPECIFIC ENGINEERING AND SHALL BE APPROVED BY THE AUTHORITY HAVING JURISDICTION (AHJ).

ENGINEERING EXPRESS®
POSTAL ADDRESS:
401 W. ATLANTIC AVE R10 #219
DELRAY BEACH, FL 33444
ENGINEERINGEXPRESS.COM

OLDCASTLE BUILDING ENVELOPE®
803 AIRPORT ROAD
TERRELL, TX 75160
(972) 551-6100

FG-5750 STOREMAX® THERMAL IMPACT STOREFRONT SYSTEM WET & DRY GLAZED

REMARKS	DRWN	CHKD	DATE
INIT ISSUE	JEM	AJP	07/23/20
REVISIONS	SSQ	RS	03/11/22

COPYRIGHT ENGINEERING EXPRESS®

20-29229g

SCALE: NTS UNLESS NOTED

c:\users\sam\engineering express\production - documents\projects\20-\20-29229 oldcastle - fg 5000 & fg 5100\revision order 8879\work\drawings & cad\fg-5750t\20-29229g obe - fg-5750tg 8-24-22.dwg
8/31/2022 2:18 PM SAM

Frank Bennardo
PE# 0046549 CA# 9885

AUGUST 31, 2022

FRANK L. BENNARDO LICENSE No. PE0046549 STATE OF FLORIDA PROFESSIONAL ENGINEER

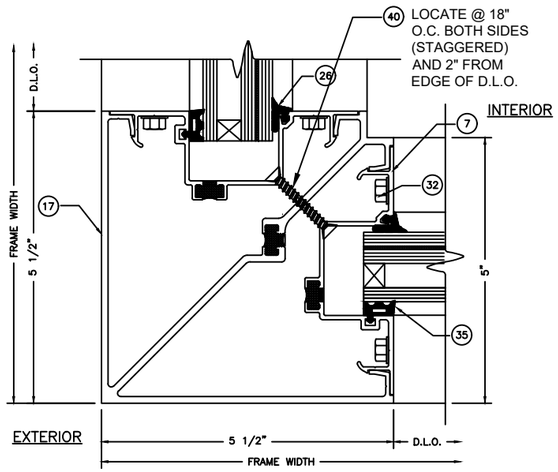

38/36 INSIDE SET 90° CORNER POST
M5

NOTE: APPROVED FOR USE OUTSIDE HVHZ

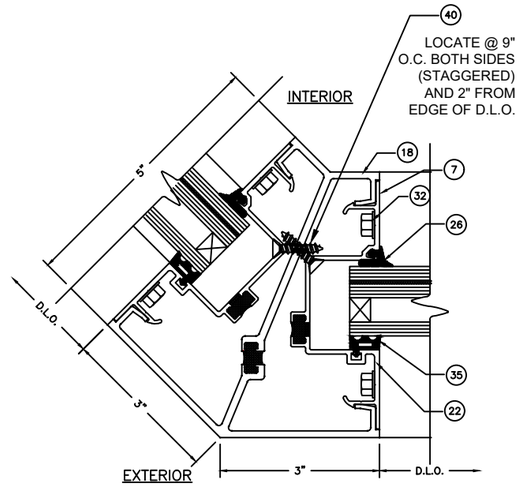

39/36 INSIDE SET 135° CORNER POST
M6

NOTE: APPROVED FOR USE OUTSIDE HVHZ

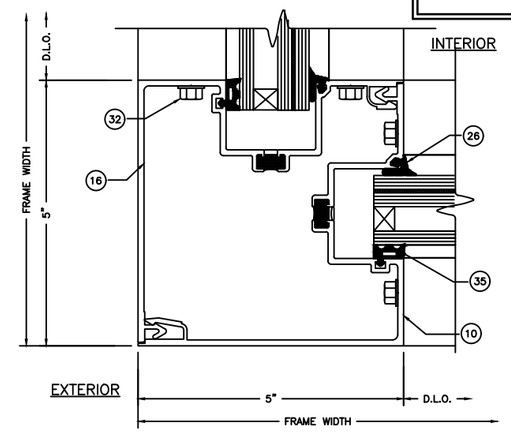

40/36 INSIDE SET 90° CORNER POST

NOTE:
MULLION CAN BE USED UNDER SITE SPECIFIC ENGINEERING AND SHALL BE APPROVED BY THE AUTHORITY HAVING JURISDICTION (AHJ).

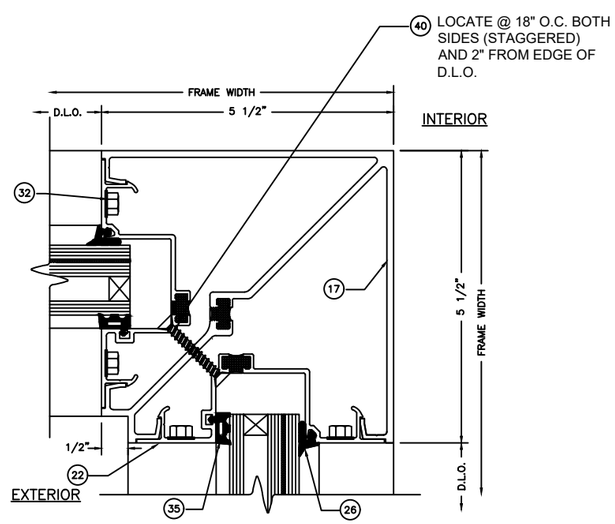

41/36 INSIDE SET 90° INSIDE CORNER POST
M5

NOTE: APPROVED FOR USE OUTSIDE HVHZ

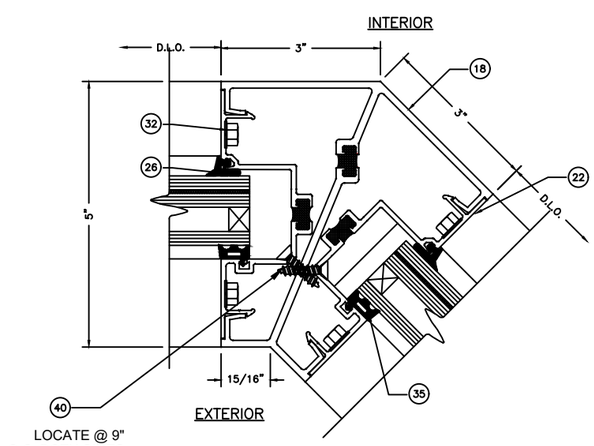

42/36 INSIDE SET 135° INSIDE CORNER POST
M6

NOTE: APPROVED FOR USE OUTSIDE HVHZ

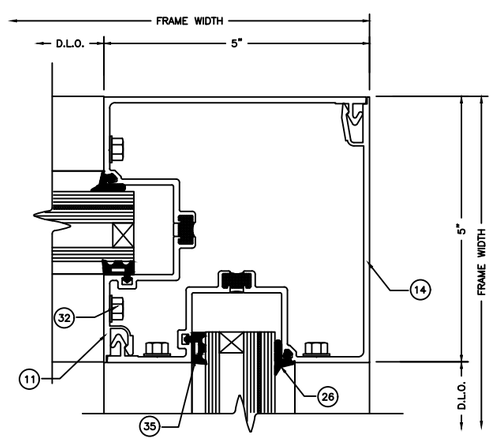

43/36 INSIDE SET INSIDE 90° CORNER ASSEMBLY

NOTE:
MULLION CAN BE USED UNDER SITE SPECIFIC ENGINEERING AND SHALL BE APPROVED BY THE AUTHORITY HAVING JURISDICTION (AHJ).

FL#20665.3

ENGINEERING EXPRESS®
POSTAL ADDRESS:
401 W. ATLANTIC AVE R10 #219
DELRAY BEACH, FL 33444
ENGINEERINGEXPRESS.COM

OLDCASTLE BUILDING ENVELOPE®
803 AIRPORT ROAD
TERRELL, TX 75160
(972) 551-6100

FG-5750 STOREMAX® THERMAL IMPACT STOREFRONT SYSTEM
WET & DRY GLAZED

REMARKS	DRWN	CHKD	DATE
INIT ISSUE	JEM	AJP	07/23/20
REVISIONS	SSQ	RS	03/11/22
-	-	-	-
-	-	-	-
-	-	-	-

COPYRIGHT ENGINEERING EXPRESS®

20-29229g

SCALE: NTS UNLESS NOTED

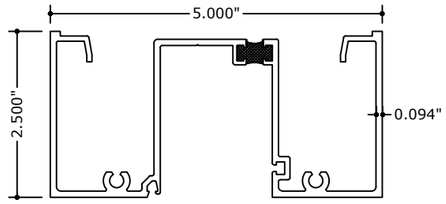

1 FGT-5770
HEAD/SILL/JAMB

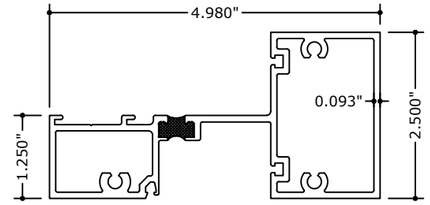

2 FGT-5772
HORIZONTAL

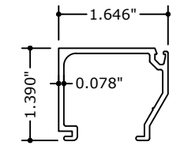

3 FG-5760
GLASS STOP

Frank Bennardo
PE# 0046549 CA# 9885

AUGUST 31, 2022

FRANK L. BENNARDO LICENSE No. PE0046549 STATE OF FLORIDA PROFESSIONAL ENGINEER

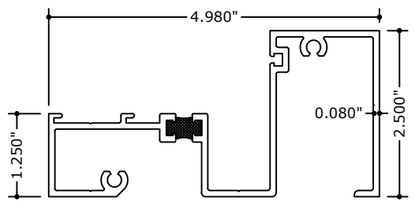

4 FGT-5771
SILL/HEAD

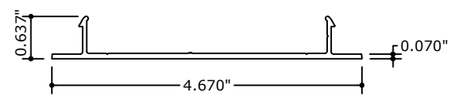

6 FG-5715
FLAT FILLER

5 FG-5719
PVC FLAT FILLER

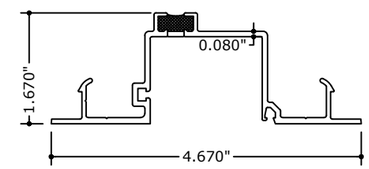

7 FGT-5780
SNAP-IN FILLER

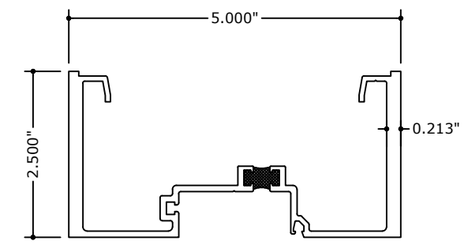

8 FGT-5773
STANDARD VERTICAL

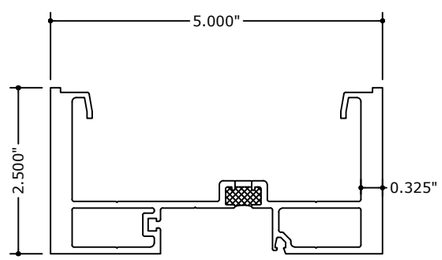

9 FGT-5774
HEAVY VERTICAL MULLION

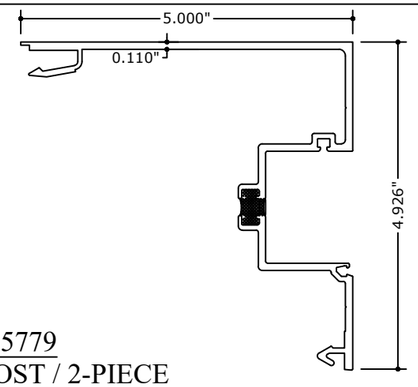

10 FGT-5779
5" POST / 2-PIECE
CORNER POST

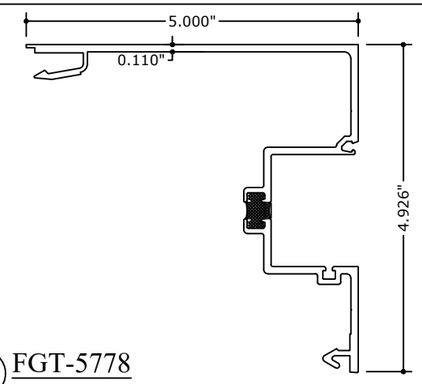

11 FGT-5778
5" VERTICAL POST

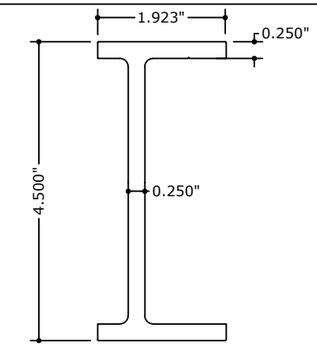

12 FG-5720
ALUMINUM STIFFENER

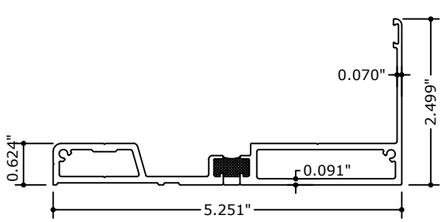

13 FGT-5712
5/8" SUBSILL

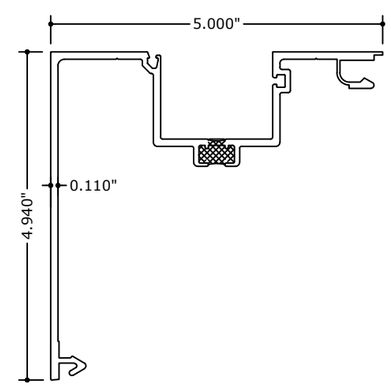

14 FGT-5784 5" POST /
2-PIECE CORNER POST

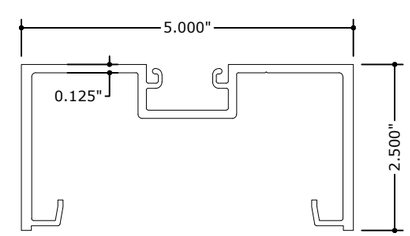

15 FG-5713
VERTICAL DOOR
MULLION W/ SIDELITE

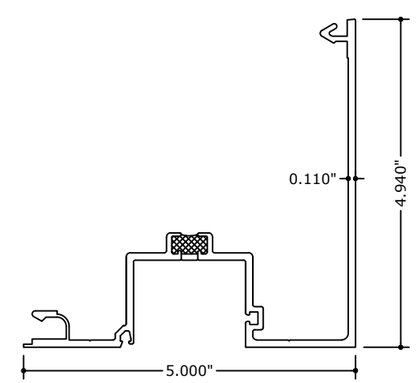

16 FGT-5785 5" POST /
2-PIECE CORNER POST

FL#20665.3

ENGINEERING EXPRESS®
POSTAL ADDRESS:
401 W. ATLANTIC AVE R10 #219
DELRAY BEACH, FL 33444
ENGINEERINGEXPRESS.COM

OLDCASTLE BUILDING ENVELOPE®
803 AIRPORT ROAD
TERRELL, TX 75160
(972) 551-6100

FG-5750 STOREMAX® THERMAL
IMPACT STOREFRONT SYSTEM
WET & DRY GLAZED

REMARKS	DRWN	CHKD	DATE
INIT ISSUE	JEM	AJP	07/23/20
REVISIONS	SSQ	RS	03/11/22
-	-	-	-
-	-	-	-
-	-	-	-

COPYRIGHT ENGINEERING EXPRESS®

20-29229g

SCALE: NTS UNLESS NOTED

c:\users\sam\engineering express\production - documents\projects\20-\20-29229 oldcastle - fg 5000 & fg 5100\revision order 8879\work\drawings & cad\fg-5750t\20-29229g obe - fg-5750tg 8-24-22.dwg
8/31/2022 2:18 PM SAM

8/31/2022 2:18 PM SAM c:\users\sam\engineering express\production - documents\projects\20-20-29229 oldcastle - fg 5000 & fg 5100\revision order 8879\work\drawings & cad\fg-5750t\20-29229g obe - fg-5750tg 8-24-22.dwg

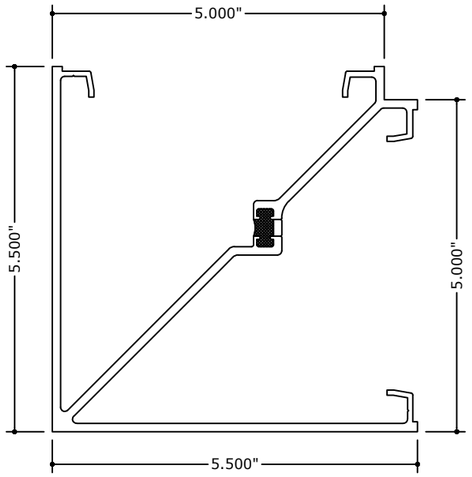

17 FGT-5706
90 DEGREE CORNER POST

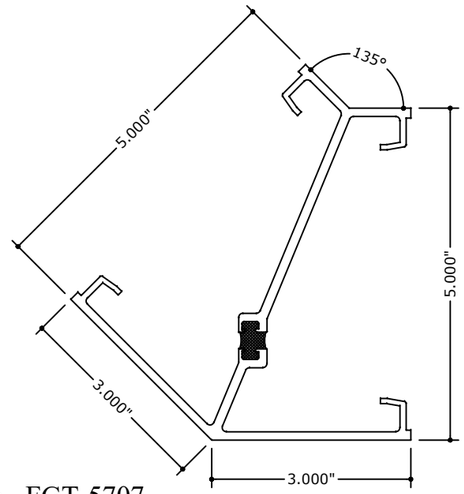

18 FGT-5707
135 DEGREE CORNER POST

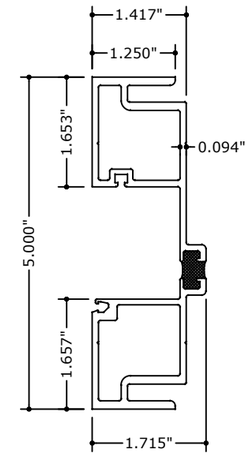

19 FGT-5782
EXPANSION MULLION (FEMALE)

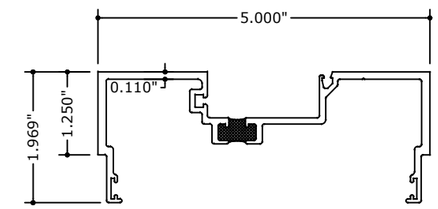

20 FGT-5783
EXPANSION MULLION (MALE)

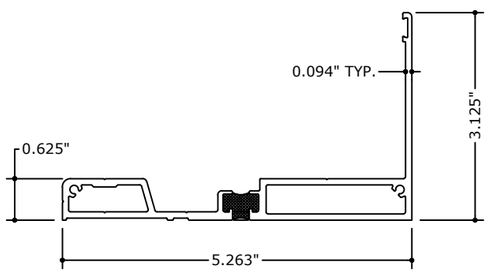

21 FGT-5726
5/8" SUBSILL

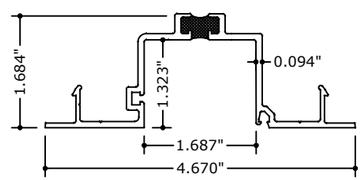

22 FGT-5781
DEEP POCKET FILLER

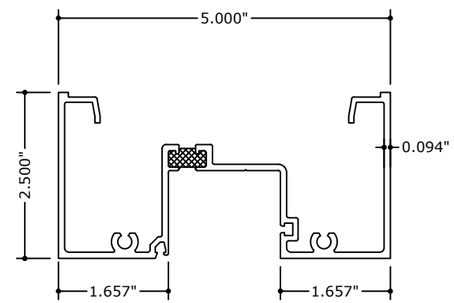

23 FGT-5786
PRE-GLAZED HEAD

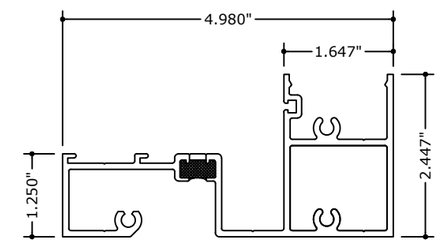

24 FGT-5787
PRE-GLAZED SILL

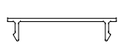

25 FG-5259
PRE-GLAZED SILL FILLER

26 FG-5730
EXTERIOR GLAZING GASKET

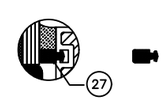

27 FG-5731
SPACER GASKET

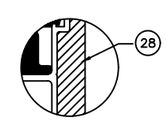

28 SM5601
JOINT TAPE

29 DOWSIL 995
SEALANT

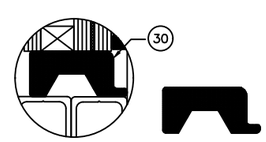

30 FG-5743
SETTING BLOCK

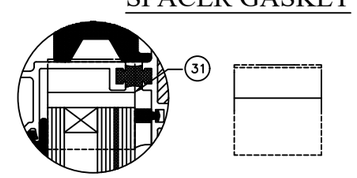

31 FG-5790-02
WATER DIVERTER

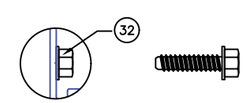

32 FS-8
JOINT FASTENER

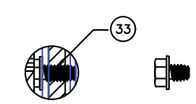

33 FS-354
REINFORCEMENT
FASTENER

Frank Bennardo
PE# 0046549 CA# 9885

AUGUST 31, 2022

FRANK L. BENNARDO LICENSE No. PE0046549 STATE OF FLORIDA PROFESSIONAL ENGINEER

FL#20665.3

ENGINEERING EXPRESS®
POSTAL ADDRESS:
401 W. ATLANTIC AVE R10 #219
DELRAY BEACH, FL 33444
ENGINEERINGEXPRESS.COM

OLDCASTLE BUILDING ENVELOPE®
803 AIRPORT ROAD
TERRELL, TX 75160
(972) 551-6100

FG-5750 STOREMAX® THERMAL
IMPACT STOREFRONT SYSTEM
WET & DRY GLAZED

REMARKS	DRWN	CHKD	DATE
INIT ISSUE	JEM	AJP	07/23/20
REVISIONS	SSQ	RS	03/11/22
-	-	-	-
-	-	-	-
-	-	-	-

COPYRIGHT ENGINEERING EXPRESS®

20-29229g

SCALE: NTS UNLESS NOTED

c:\users\sam\engineering express\production - documents\projects\20-\20-29229 oldcastle - fg 5000 & fg 5100\revision order 8879\work\drawings & cad\fg-5750t\20-29229g obe - fg-5750tg 8-24-22.dwg
8/31/2022 2:18 PM SAM

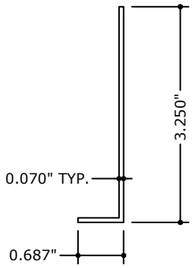

34 AN-104-01 SILL END DAM
FOR USE WITH FGT-5726 SUBSILL

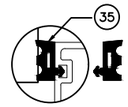

35 FG-5732
DRY GLAZE GASKET

37 AN-101-01
SILL END DAM
FOR USE WITH
FGT-5712 SUBSILL

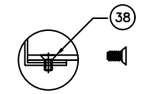

38 FS-23
SILL END DAM
FASTENER

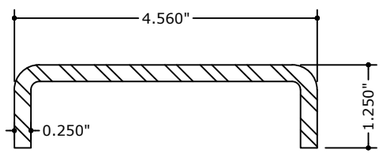

39 FG5000-PP-8
STEEL REINF. AT DOOR JAMB

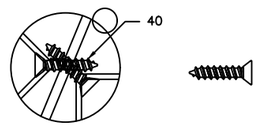

40 FS-58
CORNER ASSEMBLY FASTENER

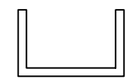

41 CH55
U-CHANNEL

42 FS-96
SHEAR BLOCK
FASTENER

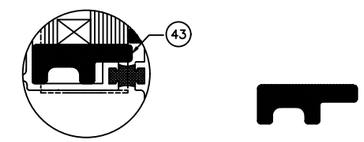

43 FG-5763
SETTING BLOCK

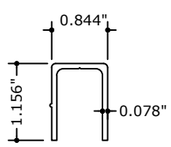

44 FG-5721-01
SETTING CHAIR

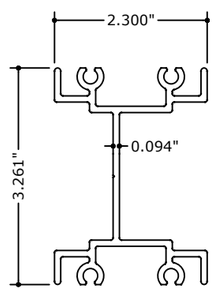

45 FG-5714-01
SHEAR BLOCK

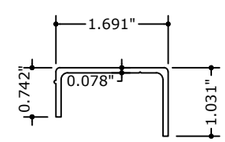

46 FG-5723-01
SETTING CHAIR

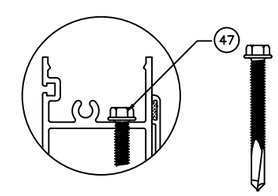

47 FS-128
PRE-GLAZE SILL FASTENER

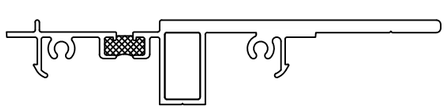

48 FGT-5788-01
PRE-GLAZE HEAD
ANCHOR

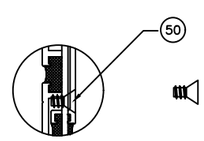

49 FS-56
FG-5714 FASTENER

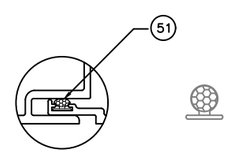

50 CW-998
EXPANSION
MULL GASKET

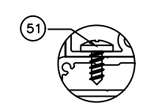

51 FS-27
FASTENER

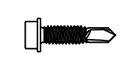

52 FS-336
FASTENER

Frank Bennardo
PE# 0046549 CA# 9885

AUGUST 31, 2022

FRANK L. BENNARDO LICENSE No. PE0046549 STATE OF FLORIDA PROFESSIONAL ENGINEER

FL#20665.3

ENGINEERING EXPRESS®
POSTAL ADDRESS:
401 W. ATLANTIC AVE R10 #219
DELRAY BEACH, FL 33444
ENGINEERINGEXPRESS.COM

OLDCASTLE BUILDING ENVELOPE®
803 AIRPORT ROAD
TERRELL, TX 75160
(972) 551-6100

FG-5750 STOREMAX® THERMAL
IMPACT STOREFRONT SYSTEM
WET & DRY GLAZED

REMARKS	DRWN	CHKD	DATE
INIT ISSUE	JEM	AJP	07/23/20
REVISIONS	SSQ	RS	03/11/22
-	-	-	-
-	-	-	-
-	-	-	-

COPYRIGHT ENGINEERING EXPRESS®

20-29229g

SCALE: NTS UNLESS NOTED

8/31/2022 2:18 PM SAM c:\users\sam\engineering express\production - documents\projects\20-20-29229 oldcastle - fg 5000 & fg 5100\revision order 8879\work\drawings & cad\fg-5750t\20-29229g obe - fg-5750tg 8-24-22.dwg

Frank Bennardo
PE# 0046549 CA# 9885

AUGUST 31, 2022

FRANK L. BENNARDO LICENSE No. PE0046549 STATE OF FLORIDA PROFESSIONAL ENGINEER

BILL OF MATERIALS

ITEM NO.	P/N	DESCRIPTION	DIMENSIONS	MATERIAL	MANUFACTURER	NOTES
			ALUMINUM PARTS			
1	FGT–5770	HEAD/SILL/JAMB	2.500 x 5.000 x 0.094	6063–T6 ALUMINUM	OBE	
2	FGT–5772	HORIZONTAL MULLION	2.500 x 4.980 x 0.094	6063–T6 ALUMINUM	OBE	
3	FG–5760	GLASS STOP	1.250 x 1.650 x 0.078	6063–T6 ALUMINUM	OBE	
4	FGT–5771	HEAD/SILL	2.500 x 4.980 x 0.094	6063–T6 ALUMINUM	OBE	
5	FG–5719	PVC FLAT FILLER	0.636 x 4.670 x 0.080	PVC	OBE	
6	FG–5715	FLAT FILLER	0.636 x 4.670 x 0.080	6063–T6 ALUMINUM	OBE	RUNS FULL LENGTH
7	FGT–5780	SNAP–IN FILLER	0.681 x 4.670 x 0.080	6063–T6 ALUMINUM	OBE	
8	FGT–5773	VERTICAL MULLION	2.500 x 5.000 x 0.094	6063–T6 ALUMINUM	OBE	
9	FGT–5774	HEAVY MULLION	2.500 x 5.000 x 0.213	6063–T6 ALUMINUM	OBE	
10	FGT–5779	5" VERTICAL POST	5.000 x 4.941 x 0.110	6063–T6 ALUMINUM	OBE	
11	FGT–5778	5" VERTICAL POST	4.941 x 5.000 x 0.110	6063–T6 ALUMINUM	OBE	
12	FG–5720	ALUMINUM STIFFENER	4.500 x 1.9375 x 0.250	6063–T6 ALUMINUM	OBE	MAXIMUM LENGTH OF 144"
13	FGT–5712	5/8" SUBSILL	5.276 x 2.750 x 0.100	6063–T6 ALUMINUM	OBE	
14	FGT–5784	5" CORNER POST	5.000 x 4.940 x 0.110	6063–T6 ALUMINUM	OBE	
15	FG–5713	VERTICAL DOOR MULLION W/ SIDELITE	2.500 x 5.000 x 0.125	6063–T6 ALUMINUM	OBE	
16	FGT–5785	5" CORNER POST	5.000 x 4.940 x 0.110	6063–T6 ALUMINUM	OBE	
17	FGT–5706	90° CORNER MULLION	5.500 X 5.500 X 0.125	6063–T6 ALUMINUM	OBE	
18	FGT–5707	135° CORNER MULLION	3.000 x 5.000 x 0.125	6063–T6 ALUMINUM	OBE	
19	FGT–5782	EXPANSION MULLION (FEMALE)	1.715 x 5.000 x 0.094	6063–T6 ALUMINUM	OBE	
20	FGT–5783	EXPANSION MULLION (MALE)	1.969 x 5.000 x 0.110	6063–T6 ALUMINUM	OBE	
21	FGT–5726	5/8" SUBSILL	5.263 x 3.125 x 0.940	6063–T6 ALUMINUM	OBE	
22	FGT–5781	DEEP POCKET FILLER	0.681 x 4.670 x 0.080	6063–T6 ALUMINUM	OBE	
23	FGT–5786	PRE–GLAZE HEAD	2.500 X 5.000 X 0.094	6063–T6 ALUMINUM	OBE	
24	FGT–5787	PRE–GLAZE SILL	2.446 X 5.000 X 0.094	6063–T6 ALUMINUM	OBE	
25	FG–5259	PRE–GLAZE SILL FILLER	.344 X 1.638 X 0.050	6063–T5 ALUMINUM	OBE	

FL#20665.3

ENGINEERING EXPRESS®
POSTAL ADDRESS:
401 W. ATLANTIC AVE R10 #219
DELRAY BEACH, FL 33444
ENGINEERINGEXPRESS.COM

OLDCASTLE BUILDING ENVELOPE®
803 AIRPORT ROAD
TERRELL, TX 75160
(972) 551-6100

FG-5750 STOREMAX® THERMAL IMPACT STOREFRONT SYSTEM WET & DRY GLAZED

REMARKS	DRWN	CHKD	DATE
INIT ISSUE	JEM	AJP	07/23/20
REVISIONS	SSQ	RS	03/11/22
-	-	-	-
-	-	-	-
-	-	-	-

COPYRIGHT ENGINEERING EXPRESS®

20-29229g

SCALE: NTS UNLESS NOTED

8/31/2022 2:18 PM SAM c:\users\sam\engineering express\production - documents\projects\20-\20-29229 oldcastle - fg 5000 & fg 5100\revision order 8879\work\drawings & cad\fg-5750t\20-29229g obe - fg-5750tg 8-24-22.dwg

Frank Bennardo
PE# 0046549 CA# 9885

AUGUST 31, 2022

FRANK L. BENNARDO LICENSE No. PE0046549 STATE OF FLORIDA PROFESSIONAL ENGINEER

BILL OF MATERIALS

ITEM NO.	P/N	DESCRIPTION	DIMENSIONS	MATERIAL	MANUFACTURER	NOTES
			ACCESSORY PARTS			
26	FG–5730	EXTERIOR GLAZING GASKET	0.120 SPACE	EPDM	VARIES	
27	FG–5731	SPACER GASKET	0.250 SPACE	SILICONE	VARIES	
28	SM5601	JOINT SEALANT TAPE	0.500 x 0.125 x VARIES	POLYISOBUTYLENE	SCHNEE–MOOREHEAD	
29	DOWSIL 995	STRUCTURAL SEALANT	––	SILICONE	DOW CHEMICAL COMPANY	FOR WET GLAZING AND FRAME ASSEMBLY
30	FG–5743	SETTING BLOCK	1.468 x 0.688 x 4.000	SILICONE	VARIES	2 PER LITE
31	FG–5790–02	WATER DIVERTER	1.358 x 1.312 x 0.050	INJECTION MOLDED PLASTIC	OBE	AT EACH END OF INTERMEDIATE HORIZONTALS
32	FS–8	FASTENER	#14 x 1" HHSTS	STEEL (DACROMET)	VARIES	SCREW SPLINE SCREW, ALUMINUM REINFORCEMENT SCREW
33	FS–354	FASTENER	#1/4–20 x 3/8" HEXHEAD TYPE F	STEEL (GEOMET)	VARIES	REINFORCEMENT SCREW, 1–1/4" FROM EACH END
34	AN–104–01	SILL FLASHING END DAM	3.250 x 0.687 x 0.700	6063–T6 ALUMINUM	OBE	
35	FG–5732	DRY GLAZE GASKET	0.250 SPACE	EPDM	VARIES	
36	DOWSIL 795	PERIMETER SEALANT	––	SILICONE	DOW CHEMICAL COMPANY	
37	AN–101–01	SILL FLASHING END DAM	2.688 x 0.625 x 0.063 x 5.125	6063–T6 ALUMINUM	OBE	FOR USE WITH FGT–5712 SUBSILL
38	FS–23	FASTENER	#6 x 3/8" PPH	STEEL (ZINC PLATED)	VARIES	ATTACH END DAM TO SUBSILL
39	FG5000–PP–8	STEEL REINF. AT DOOR JAMB	4.560 x 1.250 x 0.250	STEEL (ZINC PLATED)	VARIES	USED AT DOOR JAMBS
40	FS–58	FASTENER	#10 x 1" PHILLIPS FLAT HEAD	STAINLESS STEEL	VARIES	USED AT CORNERS
41	CH55	U–CHANNEL	1.000 x 1.593 x 0.125"	6063–T6 ALUMINUM	OBE	
42	FS–96	FASTENER	#12 x 2–1/2" PPH SMS A pt	STEEL (GEOMET)	VARIES	SHEAR BLOCK SCREW
43	FG–5763	SETTING BLOCK	0.579 x 0.250 x 1.500	SILICONE	VARIES	
44	FG–5721–01	SETTING CHAIR	1.156 x 0.844 x 0.078	6063–T6 ALUMINUM	OBE	2 PER LITE, 4" LONG
45	FG–5714–01	SHEAR BLOCK	2.300 x 3.261 x 0.094	6063–T6 ALUMINUM	OBE	2" IN LENGTH
46	FG–5723–01	SETTING CHAIR	1.031 x 1.691 x 0.078	6063–T6 ALUMINUM	OBE	2 PER LITE, 4" LONG
47	FS–128	FASTENER	5/16"x24x 2" HEX WASHER HEAD	STEEL (DACROMET)	VARIES	(2) FASTENERS PER SIDE (1 ½" AND 4 ½" ON EACH SIDE OF MULLION)
48	FGT–5788–01	PRE–GLAZE HEAD ANCHOR	1.679 x 0.588 x 4.000	6063–T6 ALUMINUM	OBE	
49	FS–56	FASTENER	#10 X 1/2" UCPFH SMS	STAINLESS STEEL	VARIES	
50	CW–998	BULB GASKET		FOAM–TITE BULB	AMESBURY	
51	FS–27	FASTENER (SILL–TO–SUBSILL)	#12 x 1/2" PPH SMS A pt	STEEL (DRACOMET)	VARIES	(4) FASTENERS PER SIDE (2" FROM MULLION & 2" O.C.)
52	FS–336	FASTENER	1/4–20 x 1–1/8" HWH KWIKFLEX		HILTI	(2) FASTENERS PER SIDE (1 ½" AND 4 ½" ON EACH SIDE OF MULLION)

FL#20665.3

ENGINEERING EXPRESS®
POSTAL ADDRESS:
401 W. ATLANTIC AVE R10 #219
DELRAY BEACH, FL 33444
ENGINEERINGEXPRESS.COM

OLDCASTLE BUILDING ENVELOPE®
803 AIRPORT ROAD
TERRELL, TX 75160
(972) 551-6100

FG-5750 STOREMAX® THERMAL IMPACT STOREFRONT SYSTEM WET & DRY GLAZED

REMARKS	DRWN	CHKD	DATE
INIT ISSUE	JEM	AJP	07/23/20
REVISIONS	SSQ	RS	03/11/22
-	-	-	-
-	-	-	-
-	-	-	-

COPYRIGHT ENGINEERING EXPRESS®

20-29229g

SCALE: NTS UNLESS NOTED