# DURA-STORM SERIES 3000 AUTO SGD

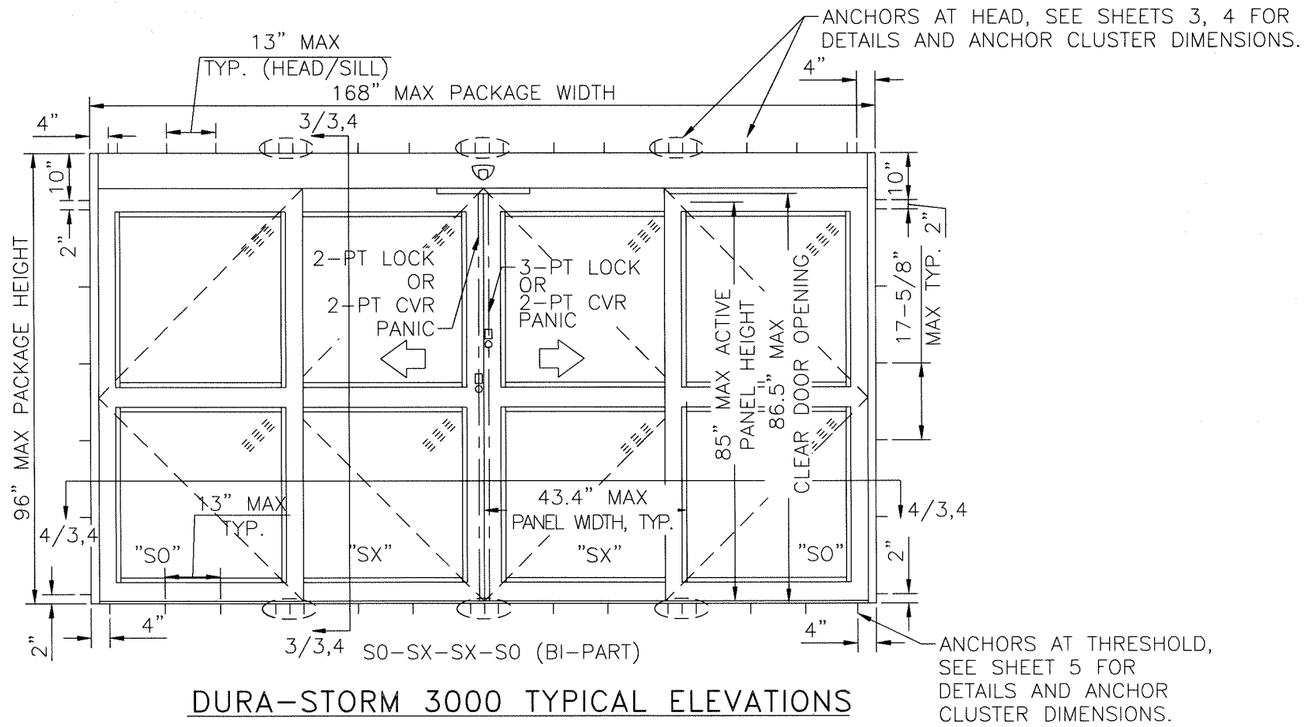


DURA-STORM 3000 TYPICAL ELEVATIONS

# DURA-STORM SERIES 3000 LOCKING ARRANGEMENTS

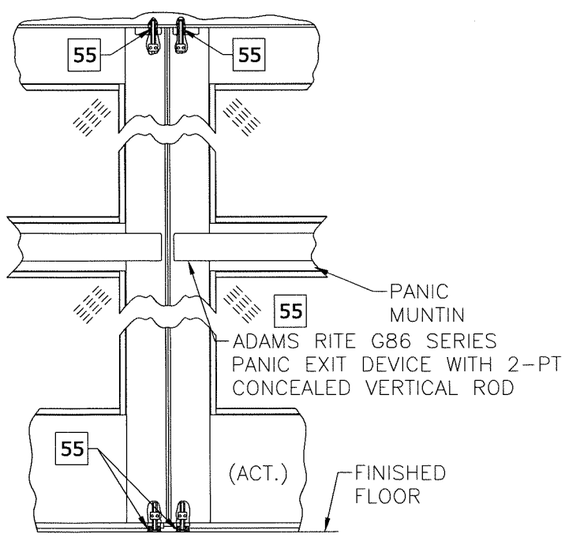


4-PT CONCEALED VERTICAL ROD WITH PANIC RELEASE LOCKING SYSTEM SERIES 3000 BI-PARTING

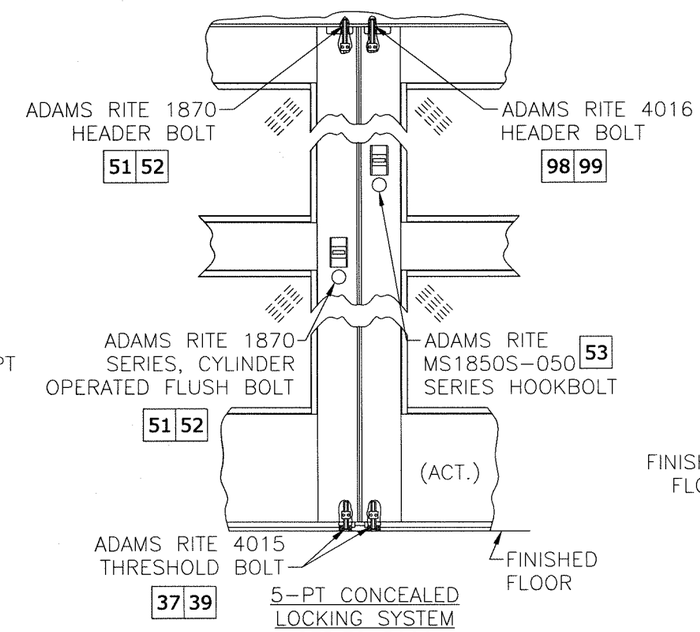


5-PT CONCEALED LOCKING SYSTEM SERIES 3000 BI-PARTING

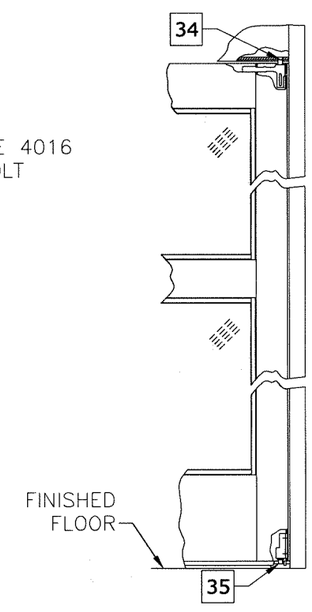


SERIES 3000 SO-PANEL

GENERAL NOTES

1. DOORS HAVE BEEN TESTED & DESIGNED IN ACCORDANCE WITH THE REQUIREMENTS OF THE FLORIDA BUILDING CODE SIXTH EDITION (2017) HIGH VELOCITY HURRICANE ZONE (HVHZ) AND MIAMI-DADE COUNTY PROTOCOLS TAS 201 FOR LARGE MISSILE IMPACT LEVEL E (RISK CATEGORY IV, 80 FT/S), TAS 202 FOR UNIFORM STATIC AIR PRESSURE AND TAS 203 FOR CYCLIC WIND LOADING.
2. PERMIT HOLDER SHALL VERIFY THE ADEQUACY OF THE EXISTING STRUCTURE TO WITHSTAND ADDITIONAL IMPOSED LOADS. 1X OR 2X WOOD BUCKS BY OTHERS SHALL BE ANCHORED PROPERLY TO TRANSFER LOADS TO THE EXISTING STRUCTURE.
3. NO INCREASE IN ALLOWABLE STRESS HAS BEEN USED IN THE DESIGN OF THESE PRODUCTS. WIND LOAD DURATION FACTOR, CD = 1.6 WAS USED FOR WOOD ANCHOR DESIGN.
4. POSITIVE AND NEGATIVE DESIGN PRESSURES CALCULATED FOR USE WITH THIS SYSTEM SHALL BE DETERMINED PER SEPARATE ENGINEERING IN ACCORDANCE WITH THE GOVERNING CODE. PRESSURE REQUIREMENTS AS DETERMINED IN ACCORDANCE WITH ASCE 7 AND CHAPTER 1609 OF THE FLORIDA BUILDING CODE SHALL BE LESS THAN OR EQUAL TO THE POSITIVE OR NEGATIVE DESIGN PRESSURE CAPACITY VALUES LISTED HEREIN FOR ANY ASSEMBLY AS SHOWN.
5. DESIGN PRESSURES NOTED HEREIN ARE BASED ON MAXIMUM TESTED PRESSURES DIVIDED BY A 1.5 SAFETY FACTOR.
6. DOORS DETAILED HEREIN HAVE BEEN DESIGNED AND TESTED TO THE MAXIMUM SPANS AND LOADS SHOWN ON THESE DRAWINGS REFERENCE FENESTRATION TESTING LAB REPORT 9322.
7. ANCHORS SHALL BE INSTALLED PER MANUFACTURER'S SPECIFICATIONS, SPACED AS NOTED HEREIN. MINIMUM EMBEDMENT AND EDGE DISTANCE EXCLUDES STUCCO, FOAM, BRICK, AND OTHER WALL FINISHES.
8. WHERE EXISTING STRUCTURE IS WOOD FRAMING, EXISTING CONDITIONS MAY VARY. FIELD VERIFY THAT FASTENERS ARE INTO ADEQUATE WOOD FRAMING MEMBERS, NOT INTO PLYWOOD.
9. WOOD HOST STRUCTURE SHALL BE "SOUTHERN PINE" G=0.55 OR GREATER DENSITY.
10. THE SYSTEM DETAILED HEREIN IS GENERIC AND DOES NOT PROVIDE INFORMATION FOR A SPECIFIC SITE. FOR SITE CONDITIONS DIFFERENT FROM THE CONDITIONS DETAILED HEREIN, A LICENSED ENGINEER OR REGISTERED ARCHITECT SHALL PREPARE SITE SPECIFIC DOCUMENTS FOR USE IN CONJUNCTION WITH THIS DOCUMENT FOR INSTALLATIONS OUTSIDE THE HVHZ; WITHIN THE HVHZ, A ONE-TIME APPROVAL FROM MIAMI-DADE COUNTY SHALL BE OBTAINED.
11. ALL BOLTS AND WASHERS SHALL BE ZINC COATED, GALVANIZED, OR STAINLESS STEEL WITH A MINIMUM TENSILE STRENGTH OF 60 KSI, EXCEPT INSTALLATION ANCHORS.
12. PRODUCT SHALL BE PERMANENTLY LABELED WITH A MINIMUM OF ONE LABEL PER SYSTEM CONTAINING THE FOLLOWING:
    STANLEY ACCESS TECHNOLOGIES
    FARMINGTON, CT
    TAS 201 / TAS 202 / TAS 203 - MISSILE LEVEL E
    FLORIDA PRODUCT APPROVAL NUMBER

SYSTEM NOTES

1. ALL ALUMINUM PARTS SHALL BE 6063-T6 ALUMINUM ALLOY AND TEMPER, UNLESS OTHERWISE NOTED.
2. GLAZING 5/8" LAMINATED, IMPACT RATED (SEE GLAZING DETAIL SHEET 7)
3. CORNER PANEL CONSTRUCTION: PANEL CORNERS ARE BUTT JOINED, SECURED WITH FOUR (4) FULL WIDTH 5/16" THREADED TIE RODS AT TOP RAIL, INTERMEDIATE HORIZONTAL MUNTIN BAR, AND BOTTOM RAIL. ALL JOINTS ARE WELDED.
4. THE GLAZING MATERIAL IN BOTH FIXED AND SLIDING PANELS OF ALL SLIDING DOORS MUST COMPLY WITH THE REQUIREMENTS IN THE PERFORMANCE SPECIFICATIONS AND METHODS OF TEST FOR SAFETY GLAZING MATERIALS USED IN BUILDINGS, PER FBC REQUIREMENTS


FRANK L. BENNARDO, P.E.
PE# DD46549
10/17/2017
STATE OF FLORIDA
PROFESSIONAL ENGINEER
No PE0046549

ENGINEERING EXPRESS®
CORPORATE OFFICE:
160 SW 12th AVE, SUITE 106
DEERFIELD BEACH, FL 33442
P: (954) 354-0660 F: (954) 354-0443
E: HELLO@ENGINEERINGEXPRESS.COM
ENGINEERINGEXPRESS.COM
CERT OF AUTH #9885


65 SCOTT SWAMP ROAD
FARMINGTON, CT 06032

STANLEY. Security
ACCESS TECHNOLOGIES

DURA-STORM 3000 SERIES AUTO SGD
BI-PARTING AUTOMATIC SLIDING LMI (MISSILE LEVEL E)
FL# 23979.1

| REMARKS | DRWN | CHKD | DATE |
|---|---|---|---|
| INIT ISSUE | JPOSA | AJP | 10/16/17 |


THIS DOCUMENT IS THE PROPERTY OF ENGINEERING EXPRESS, AND SHALL NOT BE REPRODUCED IN WHOLE OR PART WITHOUT WRITTEN CONSENT OF ENGINEERING EXPRESS. ALTERATIONS, ADDITIONS, OR OTHER MARKINGS TO THIS DOCUMENT ARE NOT PERMITTED AND INVALIDATE OUR CERTIFICATION.

COPYRIGHT ENGINEERING EXPRESS®


17-5129

SCALE: NTS UNLESS NOTED




10/17/2017 - 3:31pm zachr V:\Projects\17-5129 Pending Miami NOA (Level E)\01\Drawings\17-5129b - Dura-Storm 3K LevelE LMI.dwg

# DURA-STORM SERIES 3000 ELEVATION AND PLAN

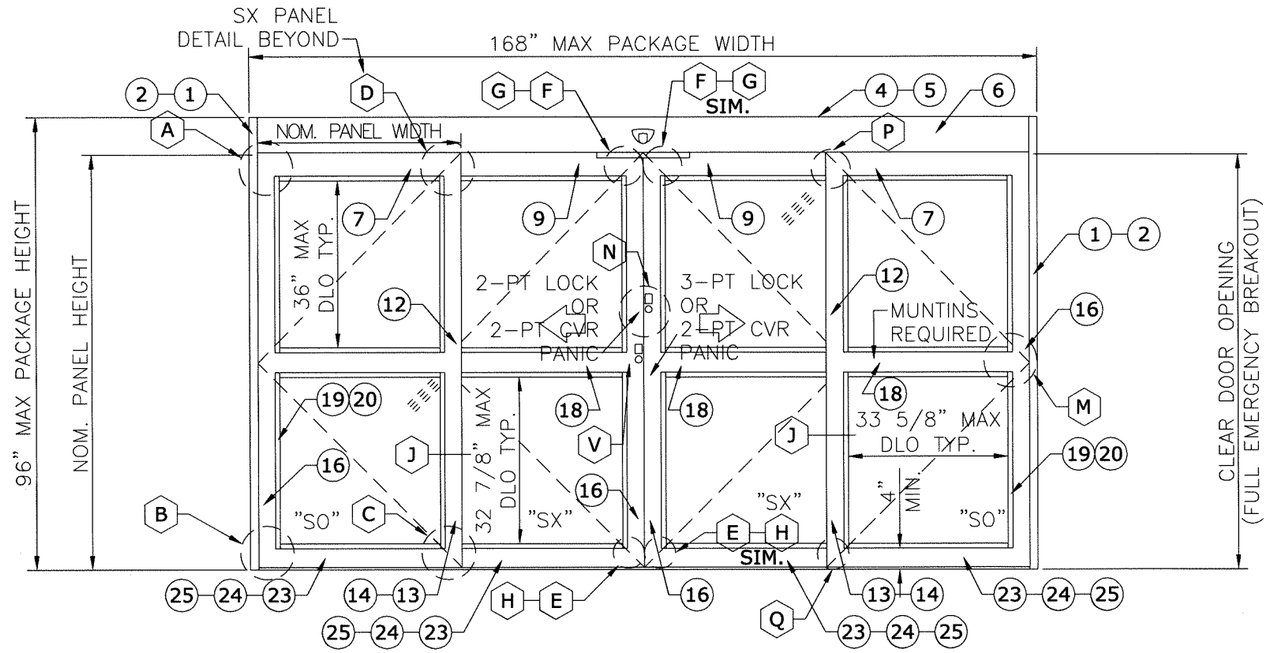


EXTERIOR ELEVATION

(XX) : EXTRUSION
(XX)(XX) : EXTRUSION, MULTI-PIECE
(XX)—(XX) : EXTRUSION, OPTION
[XX] : PART
[XX][XX] : PART, MULTI-PIECE
[XX]—[XX] : PART, OPTION
⟨XX⟩ : DETAIL
⟨XX⟩—⟨XX⟩ : DETAIL, OPTION

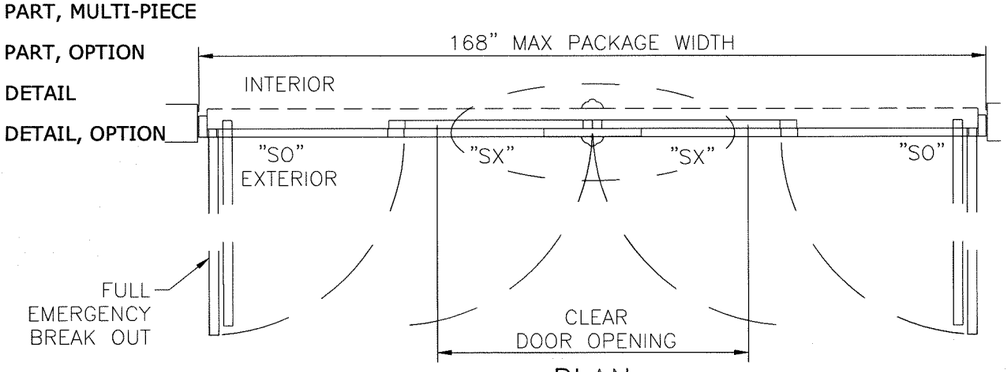


PLAN

NOTES
1. TYPICAL DOOR SHOWN. RAIL OPTIONS AVAILABLE AS INDICATED.
2. HORIZONTAL MUNTIN BAR REQUIRED.
3. 5-POINT LOCKING STANDARD (3-PT ACTIVE & 2-PT ACTIVE).
4. PRODUCT SHALL BE MANUFACTURED AND INSTALLED IN ACCORDANCE WITH PRODUCT APPROVALS.
5. SEE SHEETS 3 THROUGH 5 FOR REQUIRED ANCHORAGE.
6. SEE SHEET 7 FOR GLAZING DETAILS.

| DESIGN RATINGS | | |
|---|---|---|
| MISSILE IMPACT RATING | | |
| ☒ | LARGE AND SMALL MISSILE IMPACT | |
| ☒ | RISK CATEGORY IV, 80 FT/S, "LEVEL E" | |
| DESIGN PRESSURE RATING (PSF[Pa]) | | |
| | WHERE WATER INFILTRATION RATING IS REQUIRED | WHERE WATER INFILTRATION RATING IS NOT REQUIRED |
| POSITIVE | NOT APPROVED | 75 PSF |
| NEGATIVE | NOT APPROVED | 75 PSF |

| SERIES 3000 BI-PART AVAILABLE PACKAGE WIDTH INFORMATION | | | | | | |
|---|---|---|---|---|---|---|
| PACKAGE WIDTH | ROUGH OPENING | STILE TYPE | NOMINAL CLEAR DOOR OPENING | NOMINAL PANEL WIDTH (SX) | NOMINAL PANEL WIDTH (O) | CAULKING ALLOWANCE |
| 168.0" | 168.5" | MEDIUM | 66.3" | 43.4" | 43.4" | 1/4" / SIDE |

| SERIES 3000 BI-PART AVAILABLE PACKAGE HEIGHT INFORMATION | | | | | | |
|---|---|---|---|---|---|---|
| PACKAGE HEIGHT | ROUGH OPENING | STILE TYPE | NOMINAL CLEAR DOOR OPENING | NOMINAL PANEL HEIGHT (SX) | NOMINAL PANEL HEIGHT (O) | CAULKING ALLOWANCE |
| 96.0" | 96.3" | MEDIUM | 86.5" | 90.4" | 87.3" | 1/4" TOP |


FRANK L. BENNARDO, P.E.
PE# 0046549
10/17/2017
STATE OF FLORIDA
ENGINEERING EXPRESS
CORPORATE OFFICE:
160 SW 12th AVE, SUITE 106
DEERFIELD BEACH, FL 33442
P: (954) 354-0660 F: (954) 354-0443
E: HELLO@ENGINEERINGEXPRESS.COM
ENGINEERINGEXPRESS.COM
CERT OF AUTH #9885


65 SCOTT SWAMP ROAD
FARMINGTON, CT 06032

STANLEY. Security
ACCESS TECHNOLOGIES

DURA-STORM 3000 SERIES AUTO SGD
BI-PARTING AUTOMATIC SLIDING LMI (MISSILE LEVEL E)
FL# 23979.1

| REMARKS | DRWN | CHKD | DATE |
|---|---|---|---|
| INIT ISSUE | JPOSA | AJP | 10/16/17 |


THIS DOCUMENT IS THE PROPERTY OF ENGINEERING EXPRESS, AND SHALL NOT BE REPRODUCED IN WHOLE OR PART WITHOUT WRITTEN CONSENT OF ENGINEERING EXPRESS. ALTERATIONS, ADDITIONS, OR OTHER MARKINGS TO THIS DOCUMENT ARE NOT PERMITTED AND INVALIDATE OUR CERTIFICATION.
COPYRIGHT ENGINEERING EXPRESS®


17-5129

SCALE: NTS UNLESS NOTED




10/17/2017 - 3:31pm zachr V:\Projects\17-5129 Pending Miami NOA (Level E)\01\Drawings\17-5129b - Dura-Storm 3K LevelE LMI.dwg

# DURA-STORM SERIES 3000 SECTIONS & ANCHORING, PANIC RELEASE 4-PT LOCKS

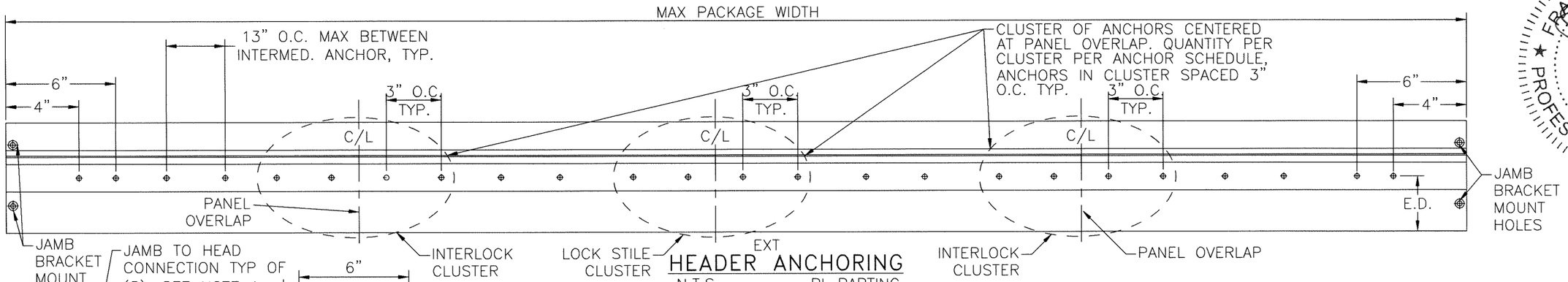


## HEADER ANCHORING
N.T.S.

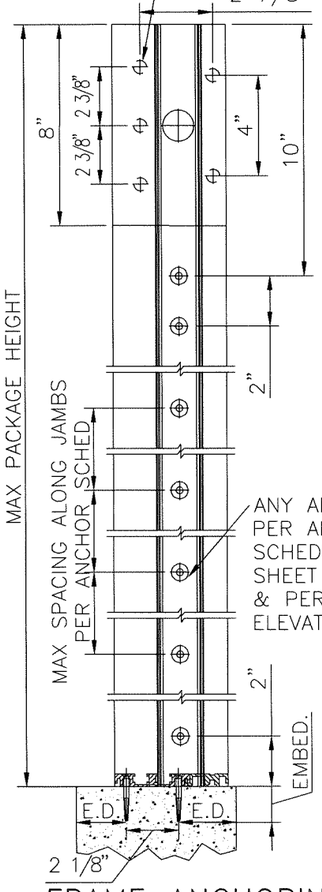


## FRAME ANCHORING
N.T.S.

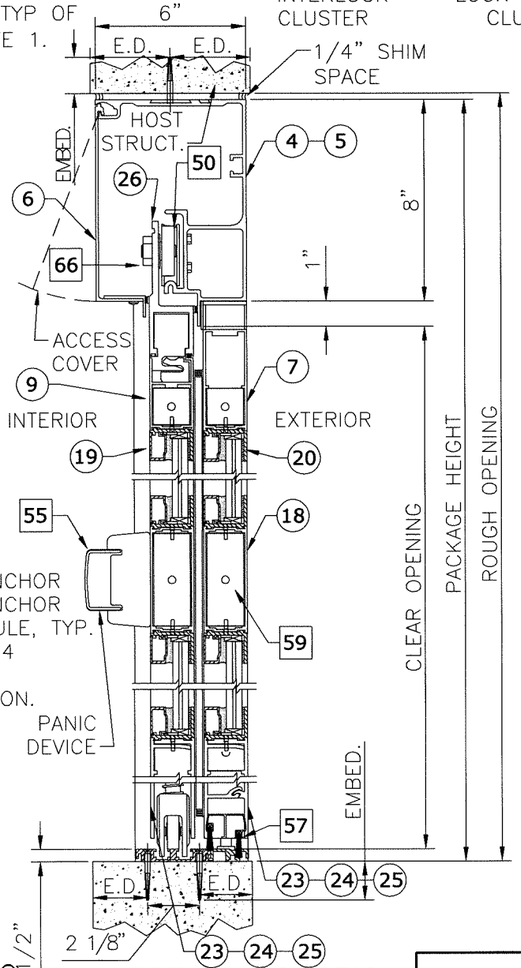


## VERTICAL SECTION
2"=1'-0"

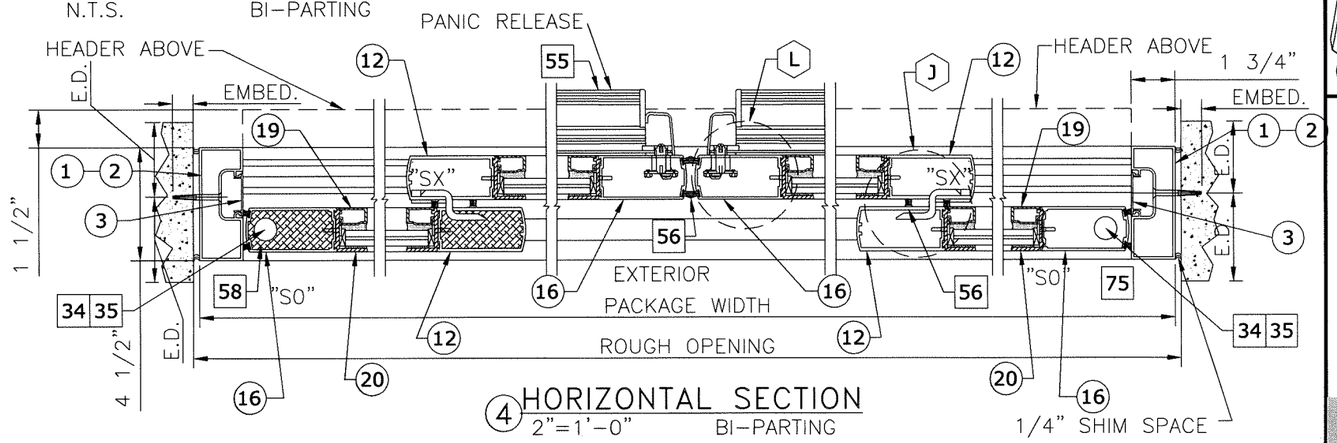


## HORIZONTAL SECTION
2"=1'-0" BI-PARTING

NOTE: ITEM 58 "FOAM BLOCK" INSTALLED IN ALL STILES, EXCEPT LOCKING STILES. NOT SHOWN IN ALL STILES FOR CLARITY

(XX) : EXTRUSION
(XX)(XX) : EXTRUSION, MULTI-PIECE
(XX)-(XX) : EXTRUSION, OPTION
[XX] : PART
[XX][XX] : PART, MULTI-PIECE
[XX]-[XX] : PART, OPTION
⟨XX⟩ : DETAIL
⟨XX⟩-⟨XX⟩ : DETAIL, OPTION

SEE THRESHOLD ANCHORS SHEET 5. APPLICABLE TO 3 KSI CONCRETE ONLY.

NOTES
1. JAMB TO HEAD CONNECTION FASTENERS; 5/16-18 HHMS WITH WASHER.

**ANCHOR SCHEDULE**

| HOST STRUCTURE | ANCHOR | EMBEDMENT | EDGE DISTANCE | NUMBER OF ANCHORS PER INTERLOCK/LOCK STILE CLUSTER | | MAX INTERMEDIATE ANCHOR SPACING ALONG HEAD & THRESHOLD | MAX ANCHOR SPACING ALONG JAMBS |
|---|---|---|---|---|---|---|---|
| | | | | HEAD | THRESHOLD | | |
| 3KSI MIN. CONCRETE | 1/4" POWERS/RAWL PERMASEAL TAPPER | 1-1/2" | 3" | 4 | 6 | 13" O.C. MAX | 17-5/8" O.C. MAX |
| 3/16" MIN. A36 STEEL | 1/4-20 SAE GR. 5 SMS | FULL THREAD ENGAGEMENT | 1/2" | 4 | N/A | 13" O.C. MAX | 17-5/8" O.C. MAX |
| G=0.55 MIN. WOOD | #14 SMS SCREW | 2" | 3/4" | 4 | N/A | 13" O.C. MAX | 17-5/8" O.C. MAX |
| 0.090" MIN. 6063-T5 ALUM. | #14 SAE GR. 5 SDS | FULL THREAD ENGAGEMENT | 1/2" | 4 | N/A | 13" O.C. MAX | 17-5/8" O.C. MAX |


FRANK L. BENNARDO, P.E.
PE# 0046549
10/17/2017
FRANK L. BENNARDO
No. PE0046549
STATE OF FLORIDA
PROFESSIONAL ENGINEER
ENGINEERING EXPRESS®
CORPORATE OFFICE:
160 SW 12th AVE, SUITE 106
DEERFIELD BEACH, FL 33442
P: (954) 354-0660 F: (954) 354-0443
E: HELLO@ENGINEERINGEXPRESS.COM
ENGINEERINGEXPRESS.COM
CERT OF AUTH #9885


65 SCOTT SWAMP ROAD
FARMINGTON, CT 06032

STANLEY. Security
ACCESS TECHNOLOGIES

DURA-STORM 3000 SERIES AUTO SGD
BI-PARTING AUTOMATIC SLIDING LMI (MISSILE LEVEL E)
FL# 23979.1

| REMARKS | DRWN | CHKD | DATE |
|---|---|---|---|
| INIT ISSUE | JPOSA | AJP | 10/16/17 |


THIS DOCUMENT IS THE PROPERTY OF ENGINEERING EXPRESS, AND SHALL NOT BE REPRODUCED IN WHOLE OR PART WITHOUT WRITTEN CONSENT OF ENGINEERING EXPRESS. ALTERATIONS, ADDITIONS, OR OTHER MARKINGS TO THIS DOCUMENT ARE NOT PERMITTED AND INVALIDATE OUR CERTIFICATION.
COPYRIGHT ENGINEERING EXPRESS®


17-5129

SCALE: NTS UNLESS NOTED




10/17/2017 - 3:31pm zachr V:\Projects\17-5129 Pending Miami NOA (Level E)\01\Drawings\17-5129b - Dura-Storm 3K LevelE LMI.dwg

# DURA-STORM SERIES 3000 SECTIONS & ANCHORING, STANDARD 5-PT LOCKS

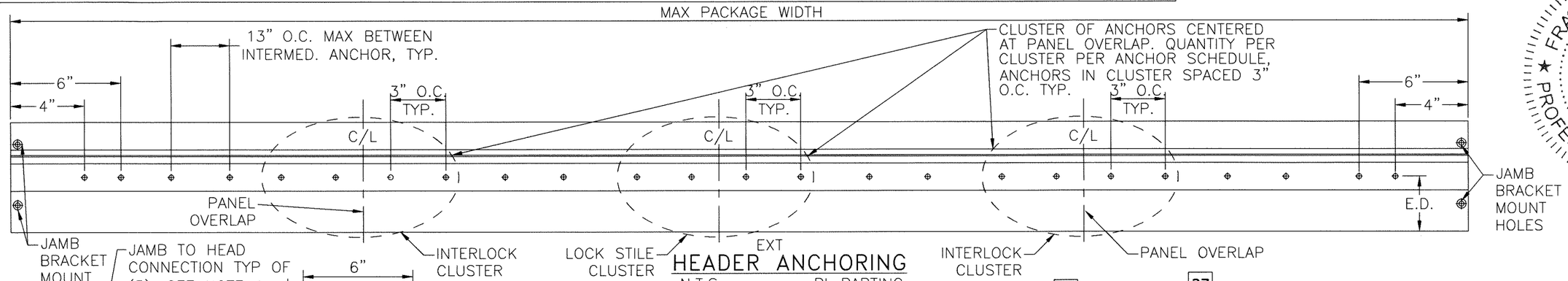


## HEADER ANCHORING

N.T.S. BI-PARTING

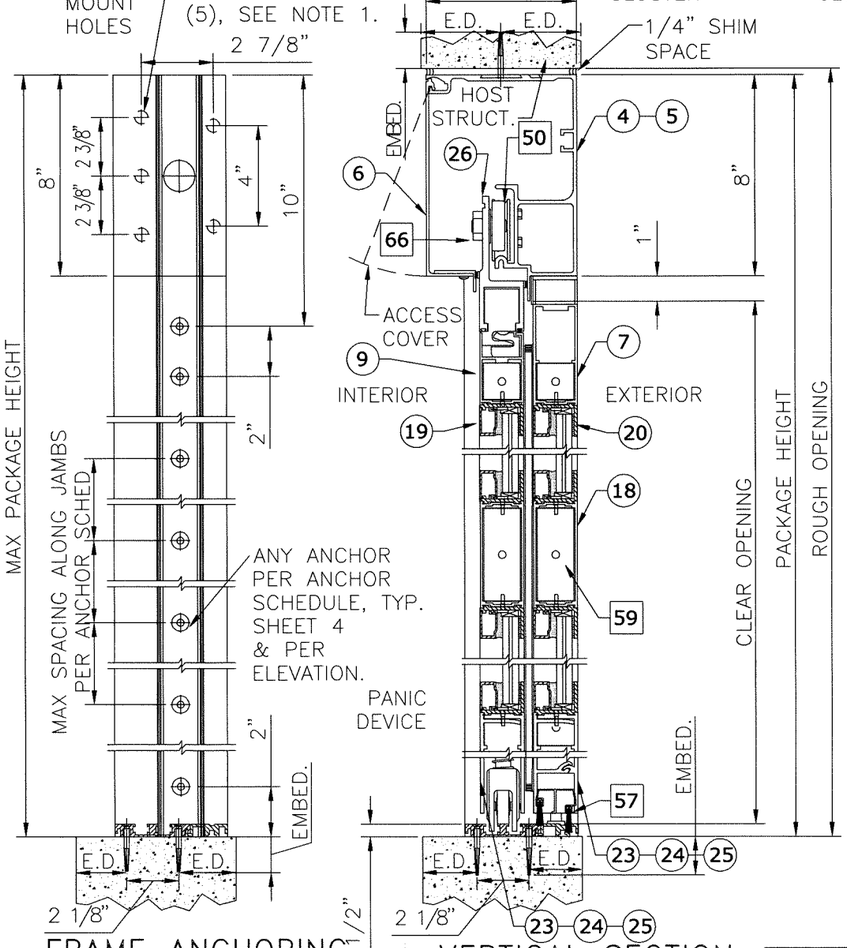


## FRAME ANCHORING

N.T.S.

## 3 VERTICAL SECTION

2"=1'-0"

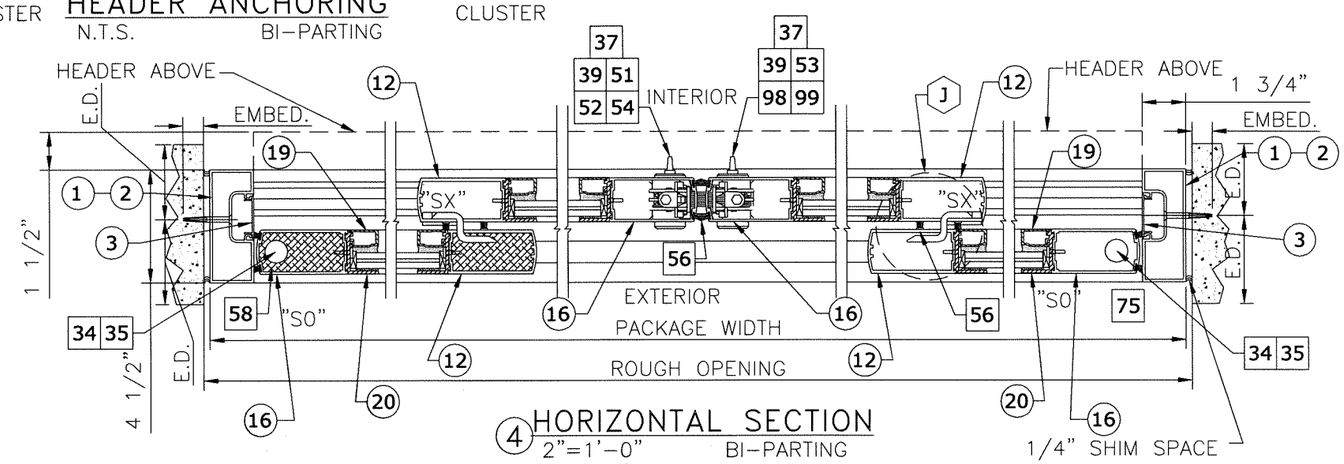


## 4 HORIZONTAL SECTION

2"=1'-0" BI-PARTING

NOTE: ITEM 58 "FOAM BLOCK" INSTALLED IN ALL STILES, EXCEPT LOCKING STILES. NOT SHOWN IN ALL STILES FOR CLARITY

(XX) : EXTRUSION
(XX)(XX) : EXTRUSION, MULTI-PIECE
(XX)-(XX) : EXTRUSION, OPTION
[XX] : PART
[XX][XX] : PART, MULTI-PIECE
[XX]-[XX] : PART, OPTION
⟨XX⟩ : DETAIL
⟨XX⟩-⟨XX⟩ : DETAIL, OPTION

SEE THRESHOLD ANCHORS SHEET 5. APPLICABLE TO 3 KSI CONCRETE ONLY.

NOTES

1. JAMB TO HEAD CONNECTION FASTENERS; 5/16-18 HHMS WITH WASHER.

**ANCHOR SCHEDULE**

| HOST STRUCTURE | ANCHOR | EMBEDMENT | EDGE DISTANCE | NUMBER OF ANCHORS PER INTERLOCK/LOCK STILE CLUSTER | | MAX INTERMEDIATE ANCHOR SPACING ALONG HEAD & THRESHOLD | MAX ANCHOR SPACING ALONG JAMBS |
|---|---|---|---|---|---|---|---|
| | | | | HEAD | THRESHOLD | | |
| 3KSI MIN. CONCRETE | 1/4" POWERS/RAWL PERMASEAL TAPPER | 1-1/2" | 3" | 4 | 6 | 13" O.C. MAX | 17-5/8" O.C. MAX |
| 3/16" MIN. A36 STEEL | 1/4-20 SAE GR. 5 SMS | FULL THREAD ENGAGEMENT | 1/2" | 4 | N/A | 13" O.C. MAX | 17-5/8" O.C. MAX |
| G=0.55 MIN. WOOD | #14 SMS SCREW | 2" | 3/4" | 4 | N/A | 13" O.C. MAX | 17-5/8" O.C. MAX |
| 0.090" MIN. 6063-T5 ALUM. | #14 SAE GR. 5 SDS | FULL THREAD ENGAGEMENT | 1/2" | 4 | N/A | 13" O.C. MAX | 17-5/8" O.C. MAX |


FRANK L. BENNARDO, P.E.
PE# 0046549
10/17/2017
STATE OF FLORIDA
ENGINEERING EXPRESS®
CORPORATE OFFICE:
160 SW 12th AVE, SUITE 206
DEERFIELD BEACH, FL 33442
P: (954) 354-0660 F: (954) 354-0443
E: HELLO@ENGINEERINGEXPRESS.COM
ENGINEERINGEXPRESS.COM
CERT OF AUTH #9885


65 SCOTT SWAMP ROAD
FARMINGTON, CT 06032

DURA-STORM 3000 SERIES AUTO SGD
BI-PARTING AUTOMATIC SLIDING LMI (MISSILE LEVEL E)
FL# 23979.1

STANLEY. Security
ACCESS TECHNOLOGIES

| REMARKS | DRWN | CHKD | DATE |
|---|---|---|---|
| INIT ISSUE | JPOSA | AJP | 10/16/17 |


THIS DOCUMENT IS THE PROPERTY OF ENGINEERING EXPRESS, AND SHALL NOT BE REPRODUCED IN WHOLE OR PART WITHOUT WRITTEN CONSENT. ENGINEERING EXPRESS, LLP TAKES NO ADDITIONAL CERTIFICATION OR LIABILITY TO THIS DOCUMENT ARE NOT PERMITTED AND INVALIDATE OUR CERTIFICATION.

COPYRIGHT ENGINEERING EXPRESS®


17-5129

SCALE: NTS UNLESS NOTED




V:\Projects\17-5129 Pending Miami NOA (Level E)\01\Drawings\17-5129b - Dura-Storm 3K LevelE LMI.dwg
zachr
10/17/2017 - 3:31pm

# DURA-STORM SERIES 3000 THRESHOLDS & ANCHORING

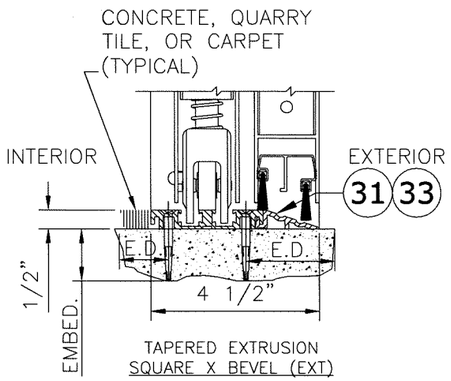


THRESHOLD–TAPERED EXT
3"=1'–0" 3000

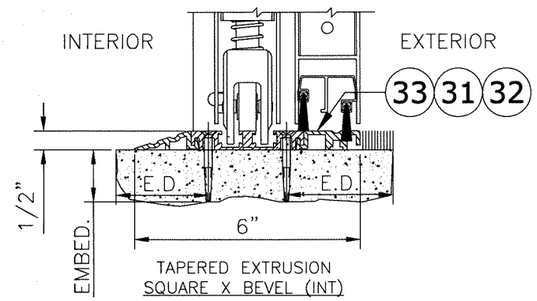


THRESHOLD–TAPERED INT
3"=1'–0" 3000

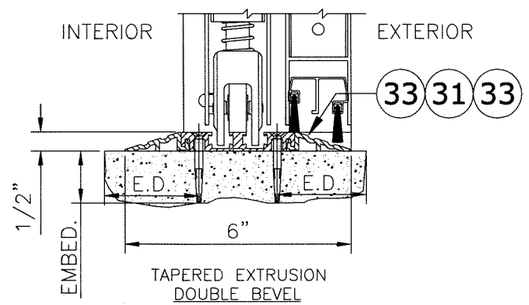


THRESHOLD–TAPERED
3"=1'–0" 3000

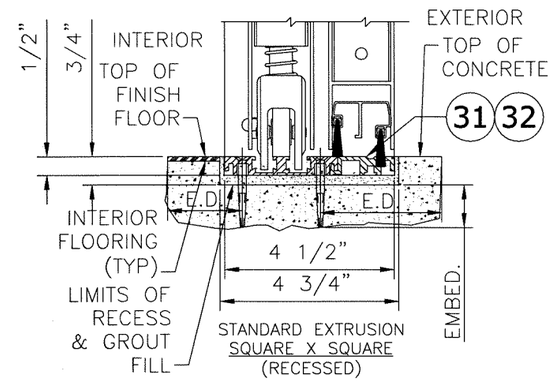


THRESHOLD–SQUARE
3"=1'–0" 3000

**NOTE: USE CONCRETE ANCHOR PER ANCHOR SCHEDULE FOR ALL THRESHOLD ANCHORAGE DETAILS SHOWN HEREIN. SEE SHEETS 3 & 4 FOR ANCHOR SCHEDULE AND ALLOWABLE CONCRETE ANCHOR TYPES**

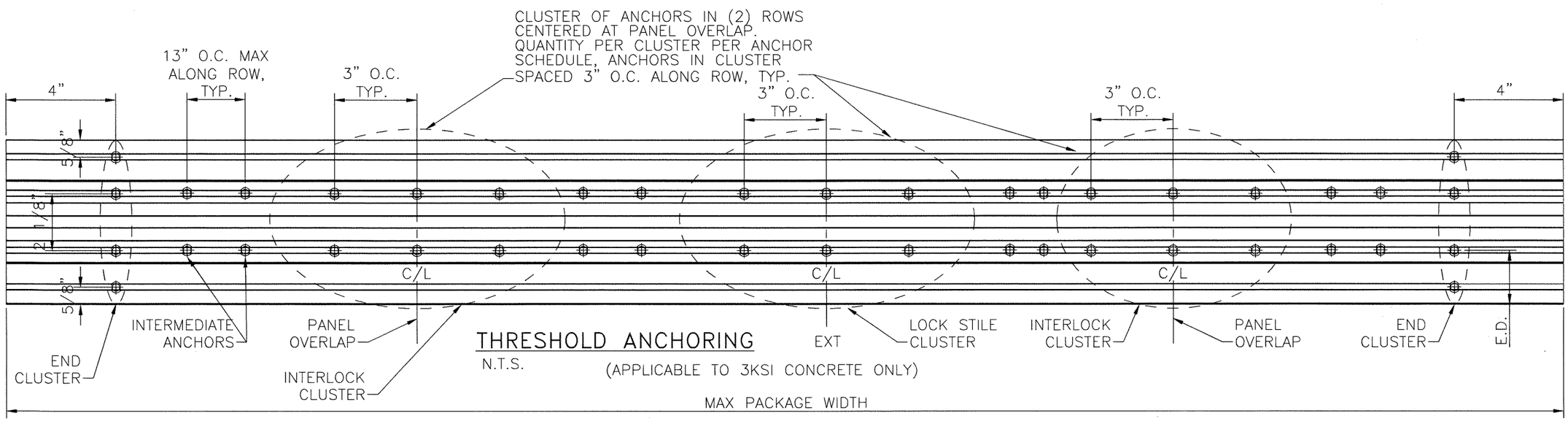


THRESHOLD ANCHORING
N.T.S.
(APPLICABLE TO 3KSI CONCRETE ONLY)

FRANK L. BENNARDO, P.E.
PE# 0046549
10/17/2017
STATE OF FLORIDA
NO PE0046549


ENGINEERING EXPRESS®
CORPORATE OFFICE: FL 106
160 SW 12th AVE, SUITE 106
DEERFIELD BEACH, FL 33442
P: (954) 354-0560 F: (954) 354-0443
E: HELLO@ENGINEERINGEXPRESS.COM
ENGINEERINGEXPRESS.COM
CERT OF AUTH #9885


65 SCOTT SWAMP ROAD
FARMINGTON, CT 06032

STANLEY. Security
ACCESS TECHNOLOGIES

DURA-STORM 3000 SERIES AUTO SGD
BI-PARTING AUTOMATIC SLIDING LMI (MISSILE LEVEL E)
FL# 23979.1

| REMARKS | DRWN | CHKD | DATE |
|---|---|---|---|
| INIT ISSUE | JPOSA | AJP | 10/16/17 |


THIS DOCUMENT IS THE PROPERTY OF ENGINEERING EXPRESS, AND SHALL NOT BE REPRODUCED IN WHOLE OR PART WITHOUT WRITTEN CONSENT. ALTERATIONS, ADDITIONS, OR OTHER MARKINGS TO THIS DOCUMENT ARE NOT PERMITTED AND INVALIDATE OUR CERTIFICATION.

COPYRIGHT ENGINEERING EXPRESS®


17-5129

SCALE: NTS UNLESS NOTED




V:\Projects\17-5129 Pending Miami NOA (Level E)\01\Drawings\17-5129b - Dura-Storm 3K LevelE LMI.dwg
10/17/2017 - 3:31pm zachr

# DURA-STORM SERIES 3000 EXTRUSIONS

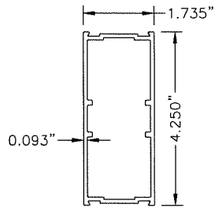


18 MUNTIN BAR
N.T.S. 6063-T6

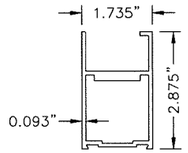


9 TOP RAIL, SX
N.T.S. 3000 6063-T6

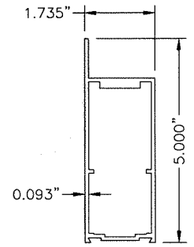


7 TOP RAIL, SO
N.T.S. 3000 6063-T6

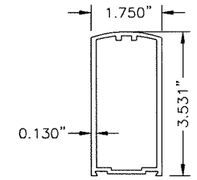


12 STILE
N.T.S. 6063-T6

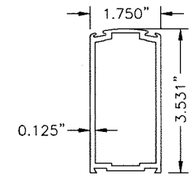


16 STILE LOCK
N.T.S. 6063-T6

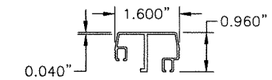


30 SWEEP HOLDER
N.T.S. 6063-T6

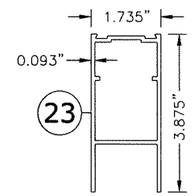


23 BOTTOM RAIL, SX/SO
N.T.S. 6063-T6

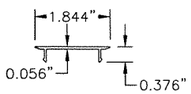


3 JAMB INSERT
N.T.S. 6063-T6

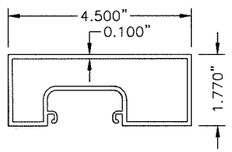


1 JAMB 4 1/2
N.T.S. 6063-T6

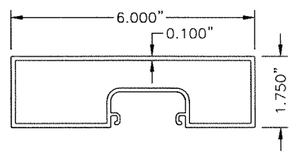


2 JAMB 6
N.T.S. 6063-T6

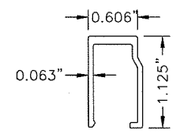


19 GLASS STOP
N.T.S. 6063-T6

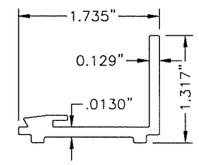


20 GUTTER
N.T.S. 6063-T6

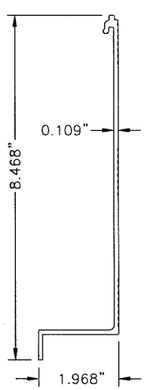


6 HEADER COVER
N.T.S. 6063-T6

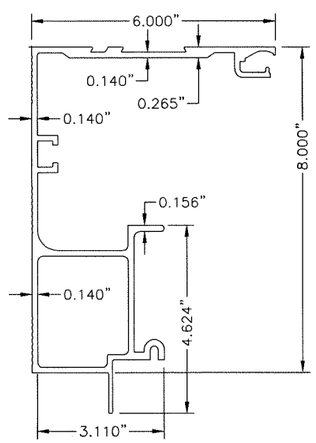


4 HEADER
N.T.S. 6063-T6

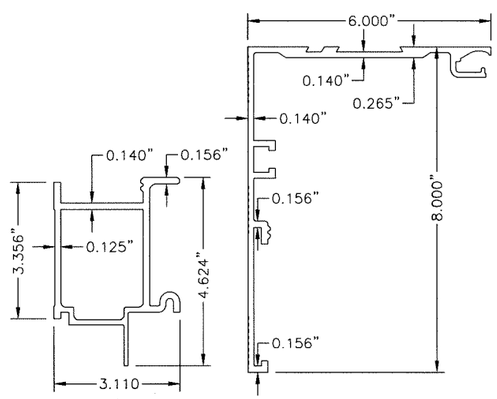


5 HEADER (2 PC.)
N.T.S. 6063-T6

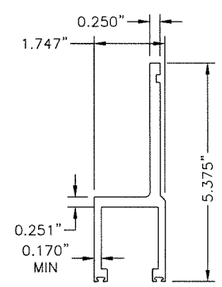


26 HANGER
N.T.S. 6063-T6

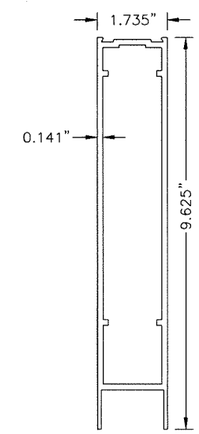


(SERIES 3000)
24 BOTTOM RAIL, SX/SO
N.T.S. 1-PIECE 6063-T6

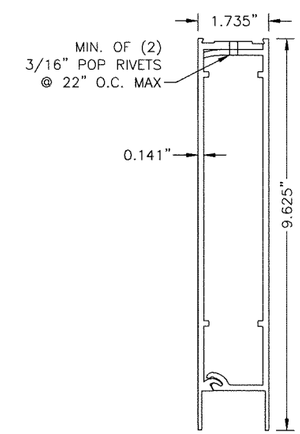


(SERIES 3000)
25 BOTTOM RAIL, SX/SO
N.T.S. 2-PIECE 6063-T6

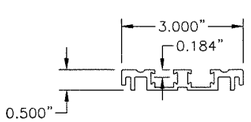


31 COMPONENT THRESHOLD
N.T.S. 6063-T6

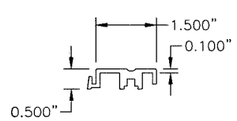


32 COMPONENT THRESHOLD
N.T.S. 6063-T6

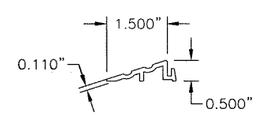


33 COMPONENT THRESHOLD
N.T.S. 6063-T6

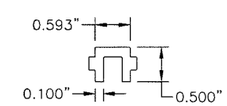


27 THRESHOLD FILLER
N.T.S. 6063-T6


FRANK L. BENNARDO, P.E.
PE# 0046549
LICENSE No PE0046549
STATE OF FLORIDA
PROFESSIONAL ENGINEER
10/17/2017

ENGINEERING EXPRESS®
CORPORATE OFFICE:
160 SW 12th AVE, SUITE 106
DEERFIELD BEACH, FL 33442
P: (954) 354-0660 F: (954) 354-0443
E: HELLO@ENGINEERINGEXPRESS.COM
ENGINEERINGEXPRESS.COM
CERT OF AUTH #9885


65 SCOTT SWAMP ROAD
FARMINGTON, CT 06032

STANLEY. Security
ACCESS TECHNOLOGIES

DURA-STORM 3000 SERIES AUTO SGD
BI-PARTING AUTOMATIC SLIDING LMI (MISSILE LEVEL E)
FL# 23979.1

| REMARKS | DRWN | CHKD | DATE |
|---|---|---|---|
| INIT ISSUE | JPOSA | AJP | 10/18/17 |


THIS DOCUMENT IS THE PROPERTY OF ENGINEERING EXPRESS, AND SHALL NOT BE REPRODUCED IN WHOLE OR IN PART WITHOUT WRITTEN CONSENT OF ENGINEERING EXPRESS. ALTERATIONS, ADDITIONS, OR OTHER MARKINGS TO THIS DOCUMENT ARE NOT PERMITTED AND INVALIDATE OUR CERTIFICATION.

COPYRIGHT ENGINEERING EXPRESS®


17-5129

SCALE: NTS UNLESS NOTED




V:\Projects\17-5129 Pending Miami NOA (Level E)\01\Drawings\17-5129b - Dura-Storm 3K LevelE LMI.dwg
10/17/2017 - 3:31pm zachr

# DURA-STORM SERIES 3000 DETAILS

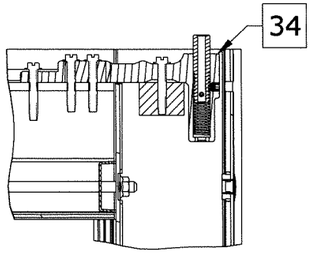


A SO PIVOT TOP
NTS SERIES 3000

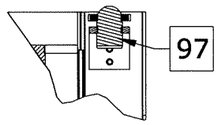


P SO PANEL BALL DETENT TOP
NTS SERIES 3000

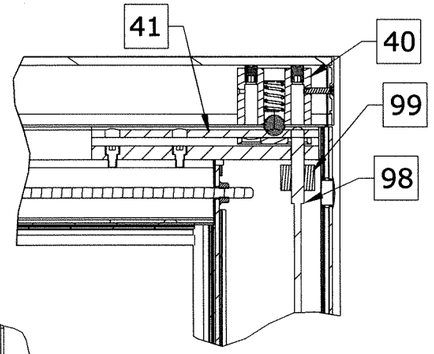


F STD BOLT TOP
NTS SERIES 3000

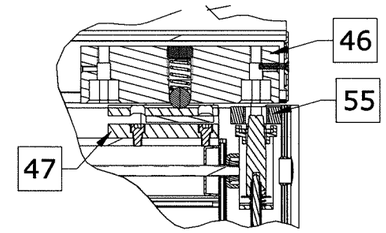


G PANIC BOLT TOP
NTS 3000

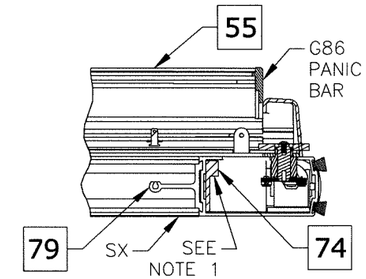


L PANIC REINFORCING
NTS SERIES 3000

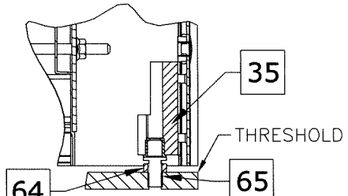


B SO PIVOT BOTTOM
NTS SERIES 3000

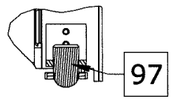


Q SO PANEL BALL DETENT BOTTOM
NTS SERIES 3000

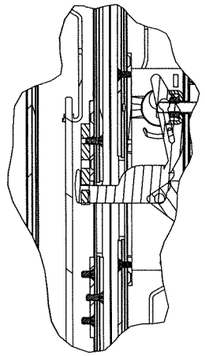

N LATCH DETAIL
NTS SERIES 3000

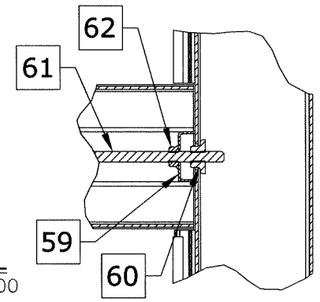


M MUNTIN DETAIL
NTS SERIES 3000

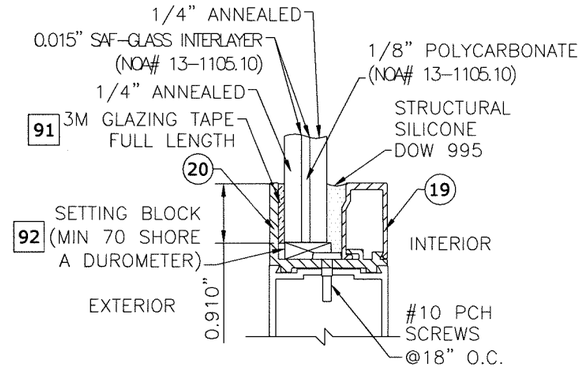


5/8" LAMINATED GLAZING DETAIL
NTS

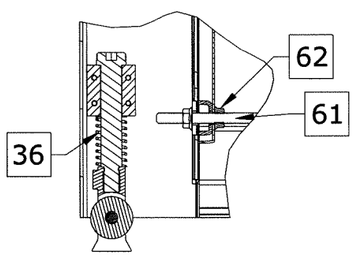


C SX GUIDE/PIVOT BOTTOM
NTS SERIES 3000

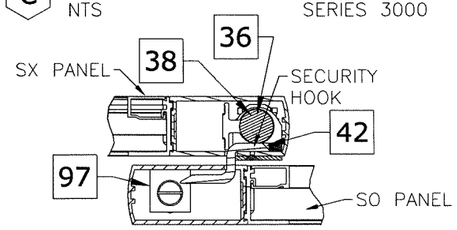


J SECURITY HOOK
NTS SERIES 3000
(SX-SO INTERLOCK)

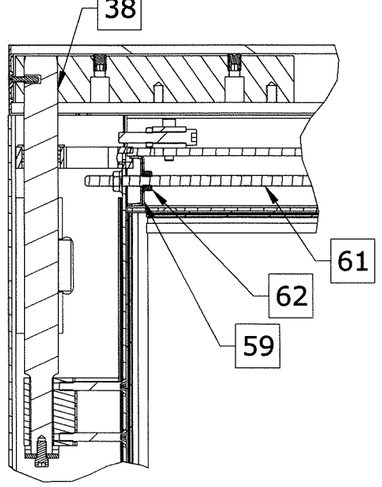


D SX PIVOT TOP
NTS SERIES 3000

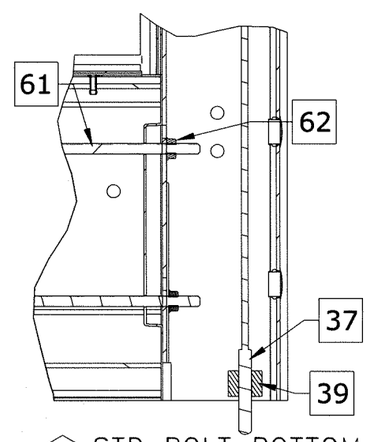


E STD BOLT BOTTOM
NTS SERIES 3000

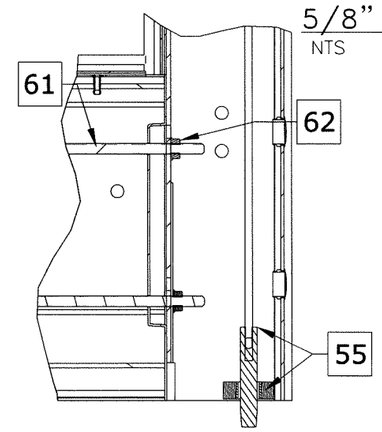


H PANIC BOLT BOTTOM
NTS 3000

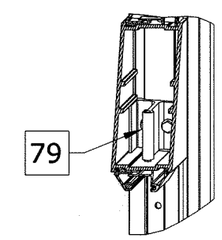


V PANIC MUNTIN DETAIL
NTS 3000

NOTES
1. ITEM 74, "STEEL PLATE-PANIC REINFORCING", IS CONTAINED WITHIN VERTICAL STILE, HAS A MINIMUM LENGTH OF 48", AND IS CENTERED VERTICALLY ABOUT CENTERLINE OF HORIZONTAL MUNTIN. ITEM 74 IS FASTENED AS FOLLOWS: SINGLE ROW #10 X 32 X 1/2" FHTCMS @ 6" OC.


FRANK L. BENNARDO, P.E.
PE# 0046549
10/17/2017
STATE OF FLORIDA
No PE0046549
PROFESSIONAL ENGINEER
ENGINEERING EXPRESS®
CORPORATE OFFICE:
160 SW 12th AVE, SUITE 106
DEERFIELD BEACH, FL 33442
P: (954) 354-0660 F: (954) 354-0443
E: HELLO@ENGINEERINGEXPRESS.COM
ENGINEERINGEXPRESS.COM
CERT OF AUTH #9885


65 SCOTT SWAMP ROAD
FARMINGTON, CT 06032

STANLEY. Security
ACCESS TECHNOLOGIES

DURA-STORM 3000 SERIES AUTO SGD
BI-PARTING AUTOMATIC SLIDING LMI (MISSILE LEVEL E)
FL# 23979.1

| REMARKS | DRWN | CHKD | DATE |
|---|---|---|---|
| INIT ISSUE | JPOSA | AJP | 10/16/17 |


THIS DOCUMENT IS THE PROPERTY OF ENGINEERING EXPRESS, AND SHALL NOT BE REPRODUCED IN WHOLE OR IN PART WITHOUT WRITTEN CONSENT OF ENGINEERING EXPRESS. ALTERATIONS, ADDITIONS, OR OTHER MARKINGS TO THIS DOCUMENT ARE NOT PERMITTED AND INVALIDATE OUR CERTIFICATION.

COPYRIGHT ENGINEERING EXPRESS®


17-5129

SCALE: NTS UNLESS NOTED




V:\Projects\17-5129 Pending Miami NOA (Level E)\01\Drawings\17-5129b - Dura-Storm 3K LevelE LMI.dwg
zachr
10/17/2017 - 3:31pm

# DURA-STORM SERIES 3000 BILL OF MATERIALS

| BILL OF MATERIALS | |
|---|---|
| REFERENCE | DESCRIPTION |
| 1 | Extrusion - Jamb - 4 1/2" |
| 2 | Extrusion - Jamb - 6" |
| 3 | Extrusion - Jamb - Insert |
| 4 | Extrusion - Header - 1 PC |
| 5 | Extrusion - Header - 2 PC |
| 6 | Extrusion - Header Cover - |
| 7 | Extrusion - Top Rail - SO |
| 9 | Extrusion - Top Rail - SX |
| 12 | Extrusion - Stile |
| 16 | Extrusion - Stile - Lock |
| 18 | Extrusion - Muntin Bar - 4.25" |
| 19 | Extrusion - Glass Stop - |
| 20 | Extrusion - Glass Gutter - |
| 23 | Extrusion - Bottom Rail SX/SO - 1 PC - 4" |
| 24 | Extrusion - Bottom Rail SX/SO - 1 PC - 10" |
| 25 | Extrusion - Bottom Rail SX/SO - 2 PC - 10" |
| 26 | Extrusion - Hanger - |
| 27 | Extrusion - Threshold - Filler |
| 30 | Extrusion - Sweep Holder |
| 31 | Extrusion - Threshold - Core |
| 32 | Extrusion - Threshold - Square |
| 33 | Extrusion - Threshold - Bevel |
| 34 | Component - Top Pivot - SO - 3000 |
| 35 | Component - Bottom Pivot - SO - 3000 |
| 36 | Component - Bottom Guide - SX - 3000 |
| 37 | Component - Throw Bolt - Std - Adams Rite 4015 |
| 38 | Component - Top pivot - SX |
| 39 | Component - Guide - Throw Bolt - Adams Rite 4015 |
| 40 | Component - Ball Detent - Std |
| 41 | Component - Detent Block - Std |
| 42 | Component - Security Hook - Std |
| 46 | Component - Ball Detent |
| 47 | Component - Detent Block |
| 50 | Component - Load Wheel - Steel/Aluminum/Plastic |
| 51 | Component - 2-PT Lock - Cylinder - Adams Rite 1870 Flushbolt, to be used with A.R. 4015 bottom bolt. |
| 52 | Component - 2-PT Lock - Thumb Turn - Adams Rite 1870 Flushbolt, to be used with A.R. 4015 bottom bolt. |

| BILL OF MATERIALS | |
|---|---|
| REFERENCE | DESCRIPTION |
| 53 | Component - 8 Ply Hookbolt Lock - Single Action - Adams Rite MS1850S-050 (Deadbolt), Used w/ Adams Rite 4015 and 4016 Bolts |
| 54 | Component - Exit Indicator - |
| 55 | Component - 2-Pt Panic Device - Adams Rite G86 with concealed vertical rod (top/bottom) and latch assembly. |
| 56 | Component - Pile - Adhesive/non Adhesive backed |
| 57 | Component - Brush - Sweep |
| 58 | Component - Foam Block - |
| 59 | Hardware - Tie Rod - Plate |
| 60 | Hardware - Tie Rod - Nut - 5/16-18 - Steel |
| 61 | Hardware - Threaded Rod - 5/16-18 - Steel |
| 62 | Hardware - 5/16 - 18 - Nut - Steel |
| 63 | Hardware - Tie Rod / Rail - Plate - Steel |
| 64 | Hardware - 7/16-20 Jamb Nut - Steel |
| 65 | Hardware - 7/16 SO Pivot Pin - Steel |
| 66 | Hardware - 5/8-11 Nut - Steel |
| 74 | Component - Steel Plate - Panic Reinforcing (48" Min.) |
| 79 | Component - Muntin Clip (with Panic) |
| 91 | Glazing - 3M Tape - |
| 92 | Glazing - Setting Block - |
| 97 | Component - Ball Detent - SO |
| 98 | Component - Throw Bolt - Std - Adams Rite 4016 |
| 99 | Component - Guide - Throw Bolt - Adams Rite 4016 |
| 100 | Extrusion - 1"x1"x3/16" Angle |


FRANK L. BENNARDO, P.E.
PE# D046549
10/17/2017
STATE OF FLORIDA
No PE0046549
PROFESSIONAL ENGINEER

ENGINEERING EXPRESS®
CORPORATE OFFICE
160 SW 12th AVE, SUITE 106
DEERFIELD BEACH, FL 33442
P: (954) 354-0660 F: (954) 354-0445
E: HELLO@ENGINEERINGEXPRESS.COM
ENGINEERINGEXPRESS.COM
CERT OF AUTH #9885


65 SCOTT SWAMP ROAD
FARMINGTON, CT 06032

STANLEY. Security
ACCESS TECHNOLOGIES

DURA-STORM 3000 SERIES AUTO SGD
BI-PARTING AUTOMATIC SLIDING LMI (MISSILE LEVEL E)
FL# 23979.1

| REMARKS | DRWN | CHKD | DATE |
|---|---|---|---|
| INIT ISSUE | JPOSA | AJP | 10/16/17 |
| - | - | - | - |
| - | - | - | - |
| - | - | - | - |
| - | - | - | - |


THIS DOCUMENT IS THE PROPERTY OF ENGINEERING EXPRESS, AND SHALL NOT BE REPRODUCED IN WHOLE OR PART WITHOUT WRITTEN CONSENT OF ENGINEERING EXPRESS. ALTERATIONS, ADDITIONS, OR OTHER MARKINGS TO THIS DOCUMENT ARE NOT PERMITTED AND INVALIDATE OUR CERTIFICATION.

COPYRIGHT ENGINEERING EXPRESS®


17-5129

SCALE: NTS UNLESS NOTED




10/17/2017 - 3:31pm zachr V:\Projects\17-5129 Pending Miami NOA (Level E)\01\Drawings\17-5129b - Dura-Storm 3K LevelE LMI.dwg