# FLORIDA PRODUCT APPROVAL DRAWINGS FOR FL300

GENERAL NOTES:

TEST STANDARDS:
AIR - ASTM E283
WATER - ASTM E331
STATIC - ASTM E330

DESIGN PRESSURE:
+40/-40 PSF

ALL ALUMINUM EXTRUSIONS SHALL BE MADE FROM 6063-T6 ALLOY AND TEMPER.

THIS PRODUCT HAS BEEN DESIGNED AND TESTED TO COMPLY WITH CURRENT FLORIDA BUILDING CODE.

THIS PRODUCT IS NOT FOR USE IN HVHZ.

MATERIALS, INCLUDING BUT NOT LIMITED TO STEEL SCREWS, THAT COME IN CONTACT WITH OTHER DISSIMILAR MATERIALS SHALL MEET THE REQUIREMENTS OF CURRENT FLORIDA BUILDING CODE.

MINIMUM SHIM SPACE 1/4", MAXIMUM SHIM SPACE 3/4" ALL DETAILS

ABBREVIATIONS:
DIA. = DIAMETER
D.L.O. = DAY LIGHT OPENING
D.O.H. = DOOR OPENING HEIGHT
D.O.W. = DOOR OPENING WIDTH
EXT. = EXTERIOR
ELEVS. = ELEVATIONS
INT. = INTERIOR
MAX. = MAXIMUM
MIN. = MINIMUM
O.C. = ON CENTER
OPP. = OPPOSITE
TYP. = TYPICAL

INDEX TO DRAWINGS


| | |
|---|---|
| 1 | INDEX TO DRAWING AND NOTES |
| 2 | FRAMING ELEVATION |
| 3 | GLASS SCHEDULE & MULLION CHARTS |
| 4 | STANDARD FRAMING DETAILS |
| 5 | STANDARD FRAMING DETAILS |
| 6 | STANDARD FRAMING DETAILS |
| 7 | DOOR FRAMING DETAILS |
| 8 | DOOR FRAMING DETAILS |
| 9 | CORNER FRAMING DETAILS |
| 10 | BILL OF MATERIALS |
| 11 | DIE DRAWINGS |
| 12 | DIE DRAWINGS |
| 13 | DIE DRAWINGS |
| 14 | WOOD FASTENER LOCATIONS |
| 15 | CONCRETE FASTENER LOCATIONS |
| 16 | LIGHT GAUGE STEEL FASTENER LOCATIONS |
| 17 | HOT ROLLED STEEL FASTENER LOCATIONS |


Elizabeth A. Broadway, P.E.

Digitally signed by Elizabeth A. Broadway, P.E.
DN: cn=Elizabeth A. Broadway, P.E., o, ou, email=ebroadway@broadway-eng.com, c=US
Date: 2018.03.28 14:16:58 -04'00'

ELIZABETH A. BROADWAY
LICENSE
No 38553
STATE OF FLORIDA

ELIZABETH A. BROADWAY
PROFESSIONAL ENGINEER
FLORIDA REGISTRATION NO. 38558
3/22/18


BROADWAY ENGINEERING, P.A.
CIVIL, MECHANICAL, STRUCTURAL AND BUILDING DESIGN
See Us At www.Broadway-Eng.Com
1335 W. Cass Street
Tampa, Florida 33606 813-251-9244
Fax 813-251-9330 Bus. Email: Info@Broadway-Eng.Com
Cadd. Email: DGarr@Broadway-Eng.Com
BE-4882 Certificate of Authorization No. 4599


| REV | BY | DATE | DESCRIPTION |
|---|---|---|---|


Coral
Architectural Products
3010 RICE MINE ROAD, TUSCALOOSA, AL 35406
PHONE 800-772-7737 FAX 800-255-7320


FLORIDA PRODUCT APPROVAL DRAWINGS FOR FL300

INDEX TO DRAWINGS AND NOTES

| | |
|---|---|
| PROJECT NO. | FL300 |
| DRAWN DEG | DATE 3/22/18 |
| CHECKED WS | APPROVED EAB |
| SHEET | 1 OF 17 |

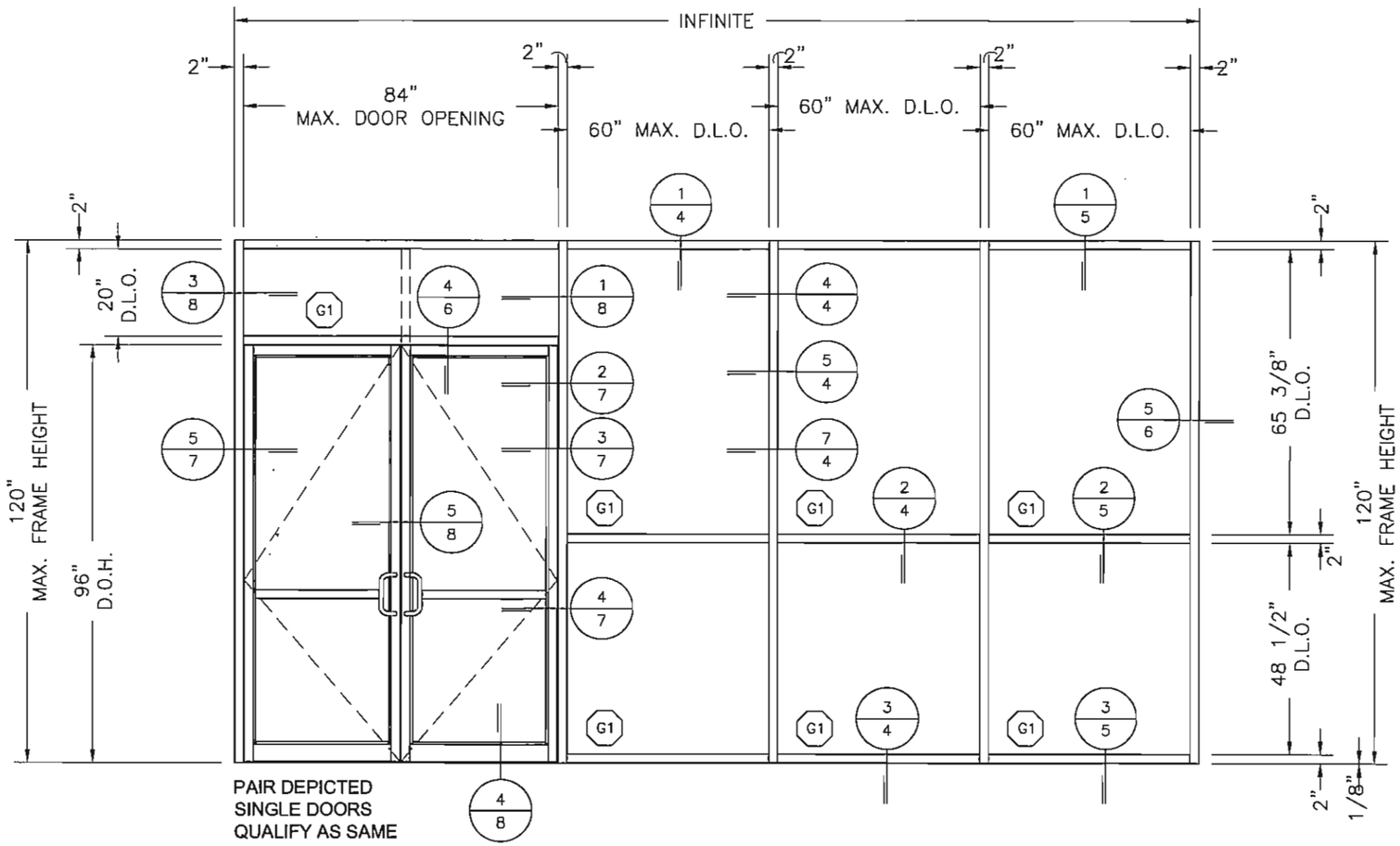


# TYPICAL STANDARD MULLION

NOTES:
1. SEE SHEET 3 FOR MULLION TYPES, HEIGHTS AND WIDTHS, AND WIND PRESSURES.
2. SEE SHEETS 14, 15, 16, AND 17 FOR PERIMETER FASTENER SCHEDULE AND LOCATIONS FOR ELEVATIONS WITH DOORS.
3. D.L.O. = DAYLIGHT OPENING; D.O. = DOOR OPENING
4. DOORS ARE SHOWN ON SEPARATE SUBMITTAL: SEE NS213, MS380 & WS500 DOOR PRODUCT APPROVALS. LESSER PRESSURE OF DOOR AND STOREFRONT SYSTEM SHALL PREVAIL.

TEST PARAMETERS:
1. DESIGN PRESSURE = +/-40 PSF
2. AIR TEST AT 6.24 PSF
3. WATER TEST AT 15 PSF
4. MAXIMUM DEFLECTION = L/175 OR .685"

| REV | BY | DATE | DESCRIPTION |
|---|---|---|---|

Coral
Architectural Products
3010 RICE MINE ROAD TUSCALOOSA, AL 35406
PHONE: 800-772-7737 FAX: 800-255-7320

FLORIDA PRODUCT APPROVAL DRAWINGS FOR FL300

FRAMING ELEVATION

ELIZABETH A. BROADWAY P.E. LICENSE No 38558 STATE OF FLORIDA

ELIZABETH A. BROADWAY
PROFESSIONAL ENGINEER
FLORIDA REGISTRATION NO. 38558
3/28/18

BROADWAY ENGINEERING, P.A.
CIVIL, MECHANICAL, STRUCTURAL AND BUILDING DESIGN
See Us At www.Broadway-Eng.Com
1335 W. Cass Street
Tampa, Florida 33606 813-251-9244
Fax 813-251-9330 Bus. Email: Info@Broadway-Eng.Com
Codd. Email: DGarr@Broadway-Eng.Com
BE-4862 Certificate of Authorization No. 4599

| | |
|---|---|
| PROJECT NO. FL300 | |
| DRAWN DEG | DATE 3/22/18 |
| CHECKED WS | APPROVED EAB |
| SHEET 2 OF 17 | |

## GLASS SCHEDULE

| MARK | TYPE | MANUFACTURER | MAXIMUM D.L.O. SIZE | MAXIMUM AREA |
|---|---|---|---|---|
| G1 | 1/4" TEMPERED OUTER SURFACE, 1/2" AIR SPACE, 1/4" TEMPERED INNER SURFACE | VARIES | 60" X 94" | 39.2 SQ. FT. |

NOTE: ANY SINGLE LITE SHOULD NOT EXCEED MAXIMUM SQUARE FEET SHOWN ABOVE IN HORIZONTAL OR VERTICAL CONDITION

## DOOR JAMB CHART

| MAXIMUM PSF | MAXIMUM WIDTH | MAXIMUM HEIGHT | PART | DETAIL |
|---|---|---|---|---|
| 0-30 | 84" | 96" | FL309 | 2/7 |
| 0-30 | 84" | 120" | FL309 AND SR102 | 3/7 |
| 30-40 | 84" | 96" | FL309 AND SR102 | 3/7 |
| 30-40 | 84" | 120" | FL309 AND SR101 | 4/7 |

NOTE: FL349 DOOR JAMB CAN BE SUBSTITUTED FOR FL309 ABOVE AS REQUIRED FOR GEAR HINGE APPLICATIONS

## VERTICAL MULLION AND CORNER CHART

| MAXIMUM PSF | MAXIMUM WIDTH | MAXIMUM HEIGHT | PART | DETAIL |
|---|---|---|---|---|
| 0-40 | 60" | 72" | FL304/305 | 4/4 |
| 0-40 | 60" | 84" | FL314/305 | 6/5 |
| 0-40 | 60" | 96" | FL316/305 | 6/4 |
| 0-40 | 60" | 96" | FL351/353 | 1/9 |
| 0-40 | 60" | 96" | FL310/311 | 4/5 |
| 0-30 | 60" | 120" | FL304/305 AND SR102 | 7/4 |
| 0-40 | 60" | 120" | FL314/305 AND SR102 | 7/5 |
| 30-40 | 60" | 120" | FL304/305 AND SR101 | 5/4 |
| 0-40 | 60" | 120" | FL351/353 | 1/9 |
| 30-40 | 60" | 120" | FL310/311 AND SR102 | 5/5 |

NOTE: PRESSURES (PSF), WIDTHS OR HEIGHTS BEYOND THE MAXIMUM SHOWN IN THE CHARTS ABOVE WILL REQUIRE SHOP DRAWINGS TO BE SIGNED AND SEALED BY A PROFESSIONAL ENGINEER REGISTERED IN THE STATE OF FLORIDA

ELIZABETH A. BROADWAY P.E. LICENSE No 38558 STATE OF FLORIDA

ELIZABETH A. BROADWAY 3/23/18
PROFESSIONAL ENGINEER
FLORIDA REGISTRATION NO. 38558

| REV | BY | DATE | DESCRIPTION |
|---|---|---|---|

Coral Architectural Products
3010 RICE MINE ROAD, TUSCALOOSA, AL 35406
PHONE: 800-772-7737 FAX: 800-255-1320

FLORIDA PRODUCT APPROVAL DRAWINGS FOR FL300

GLASS SCHEDULE & MULLION CHARTS

BROADWAY ENGINEERING, P.A.
CIVIL, MECHANICAL, STRUCTURAL AND BUILDING DESIGN
See Us At www.Broadway-Eng.Com
1335 W. Cass Street
Tampa, Florida 33606 813-251-9244
Fax 813-251-9330 Bus. Email: Info@Broadway-Eng.Com
Cadd. Email: DGorr@Broadway-Eng.Com
BE-4882 Certificate of Authorization No. 4599

| | |
|---|---|
| PROJECT NO. FL300 | |
| DRAWN DEG | DATE 3/22/18 |
| CHECKED WS | APPROVED EAB |
| SHEET 3 OF 17 | |

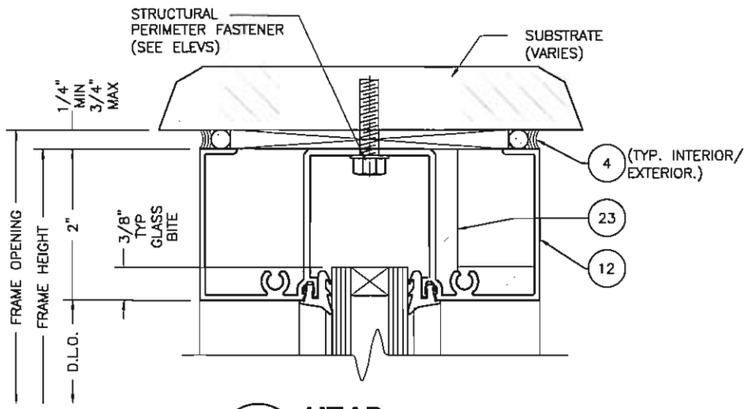


1/4 HEAD
SCALE: 1:2

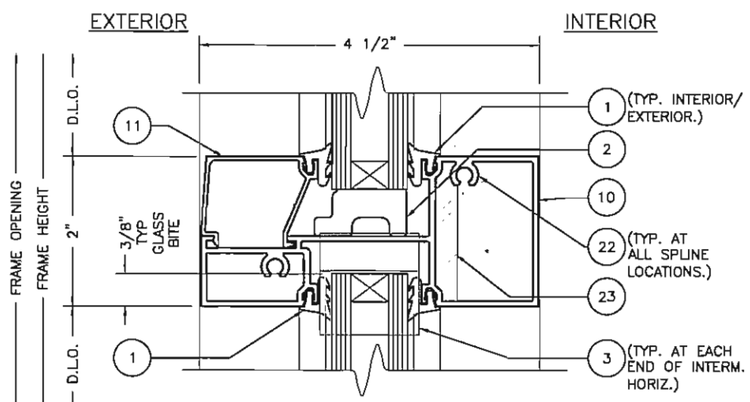


2/4 HORIZONTAL
SCALE: 1:2

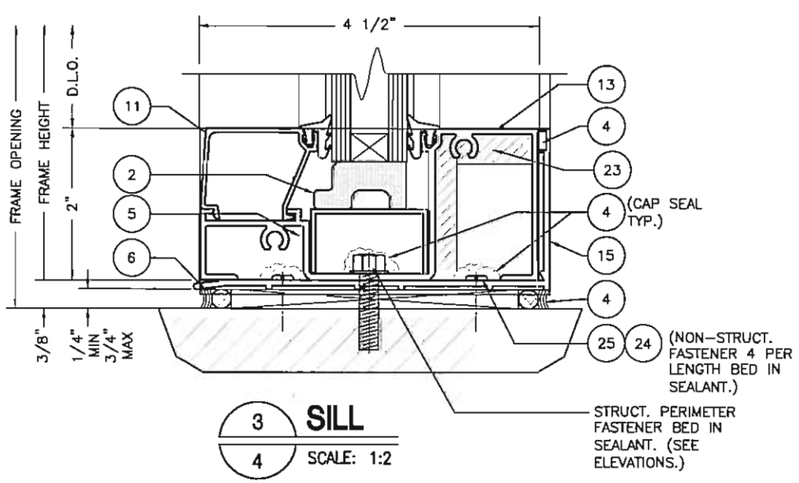


3/4 SILL
SCALE: 1:2

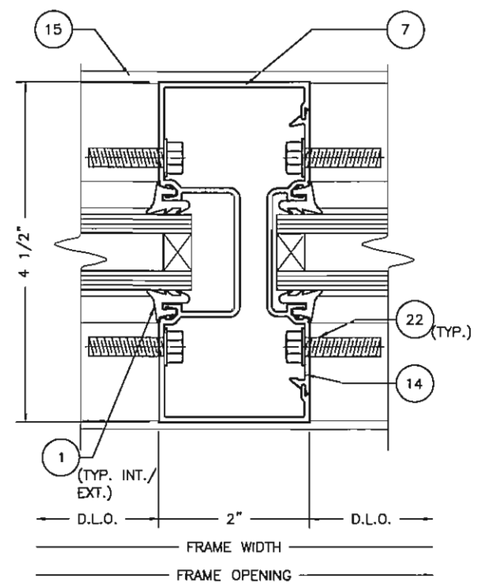


4/4 STANDARD VERTICAL
SCALE: 1:2

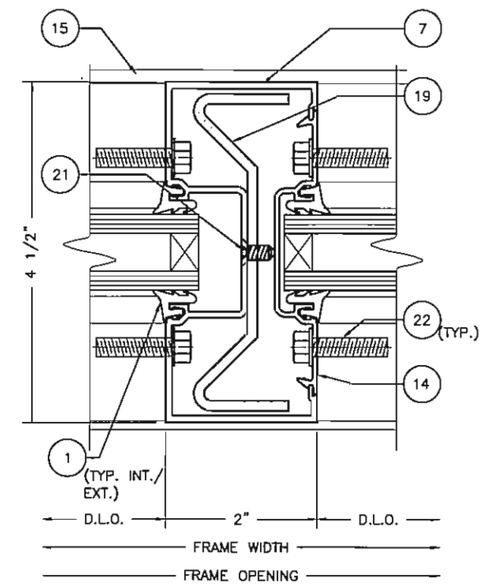


5/4 STANDARD VERT. W/ STEEL
SCALE: 1:2

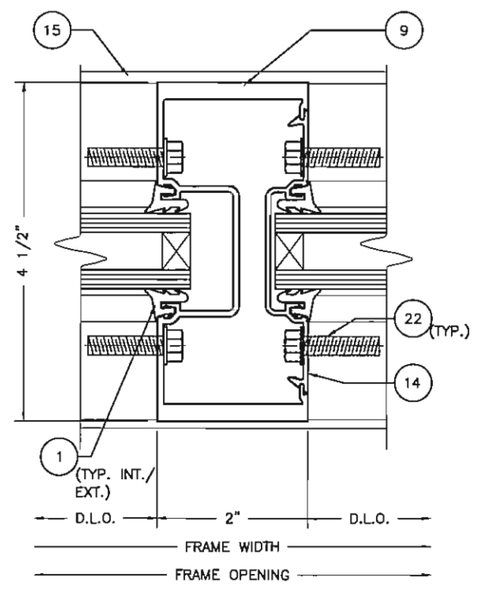


6/4 HEAVY VERTICAL
SCALE: 1:2

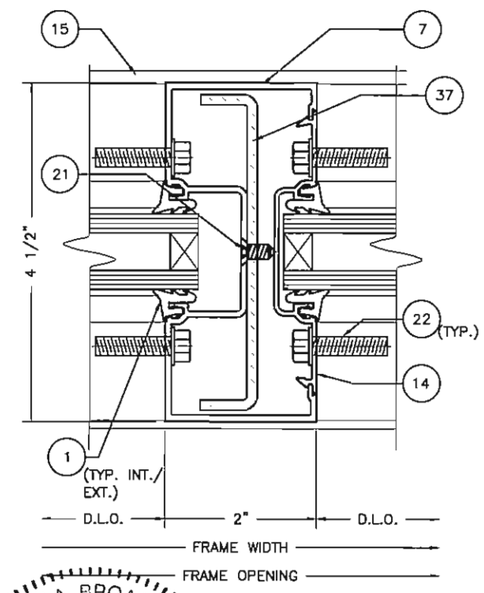


4/4 STANDARD VERT. W/ STEEL
SCALE: 1:2

STATE OF FLORIDA
ELIZABETH A BROADWAY
LICENSED PROFESSIONAL ENGINEER
No 38558

ELIZABETH A BROADWAY
PROFESSIONAL ENGINEER
FLORIDA REGISTRATION NO. 38558
3/23/18

| REV | BY | DATE | DESCRIPTION |
|---|---|---|---|

Coral
Architectural Products
3010 RICE MINE ROAD, TUSCALOOSA, AL 35406
PHONE: 800-772-7737 FAX: 800-255-7320

FLORIDA PRODUCT APPROVAL DRAWINGS FOR FL300

STANDARD FRAMING DETAILS

BROADWAY ENGINEERING, P.A.
CIVIL, MECHANICAL, STRUCTURAL AND BUILDING DESIGN
See Us At www.Broadway-Eng.Com
1335 W. Cass Street
Tampa, Florida 33606 813-251-9244
Fax 813-251-9330 Bus. Email: Info@Broadway-Eng.Com
Codd. Email: DGorr@Broadway-Eng.Com
BE-4862 Certificate of Authorization No. 4599

| PROJECT NO. | |
|---|---|
| FL300 | |
| DRAWN DEG | DATE 3/22/18 |
| CHECKED WS | APPROVED EAB |
| SHEET 4 OF 17 | |

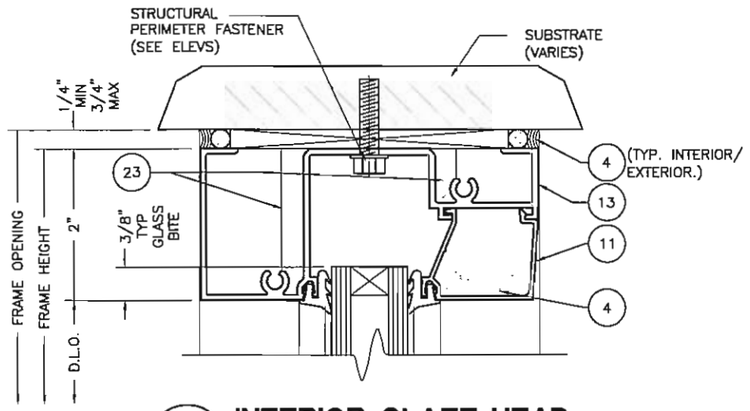


## 1/5 INTERIOR GLAZE HEAD

SCALE: 1:2

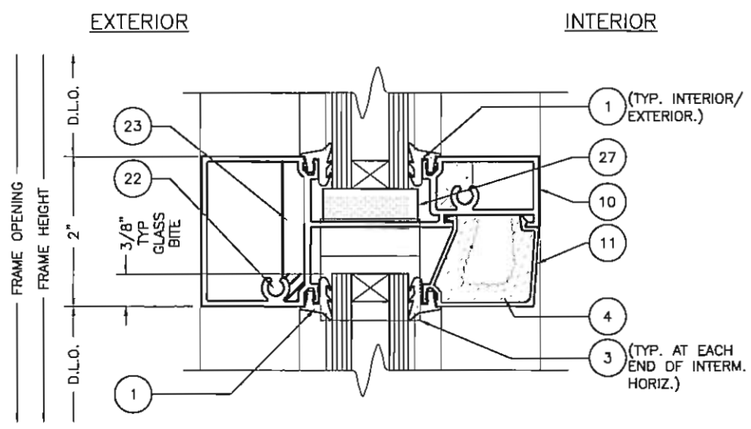


## 2/5 INTERIOR GLAZE HORIZONTAL

SCALE: 1:2

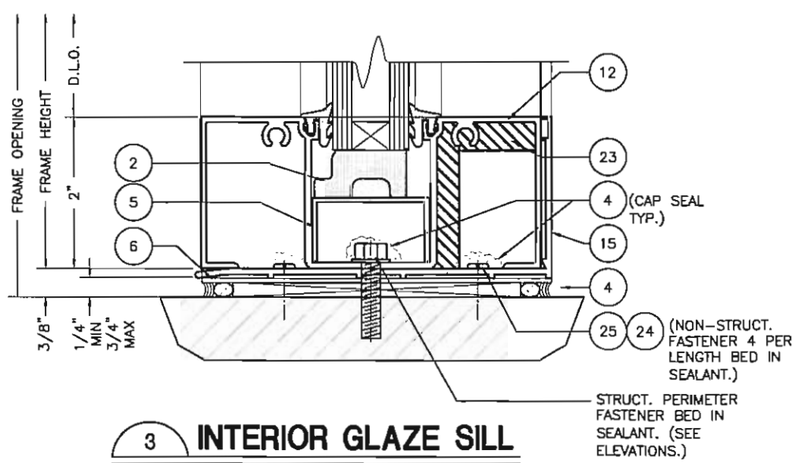


## 3/5 INTERIOR GLAZE SILL

SCALE: 1:2

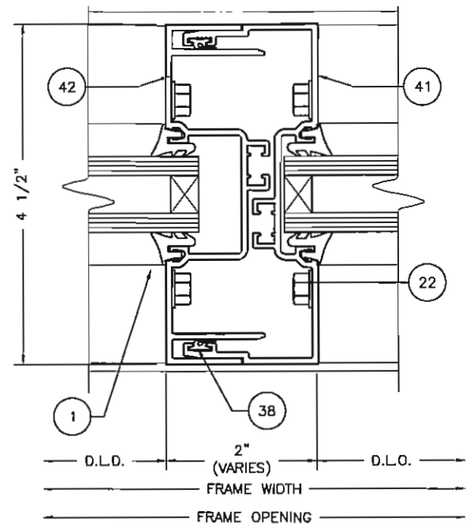


## 4/5 EXPANSION MULLION

SCALE: 1:2

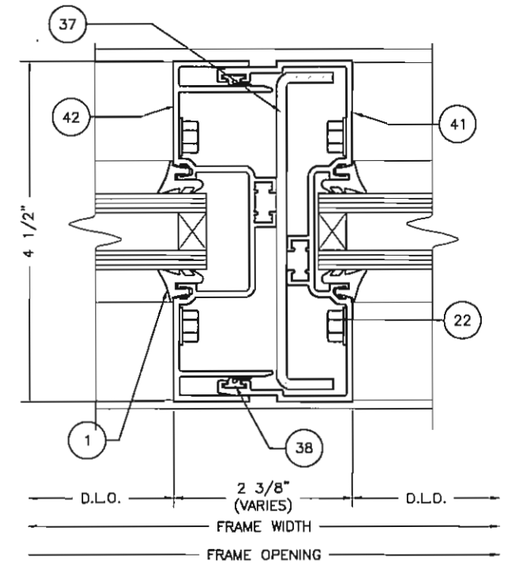


## 5/5 EXPANSION MULLION W/STEEL

SCALE: 1:2

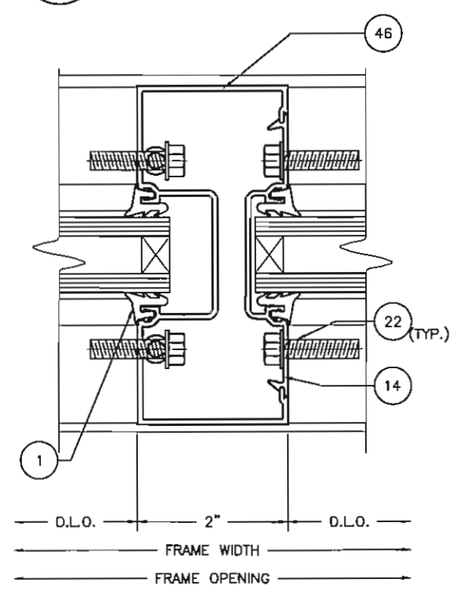


## 6/5 OPTIONAL VERTICAL

SCALE: 1:2

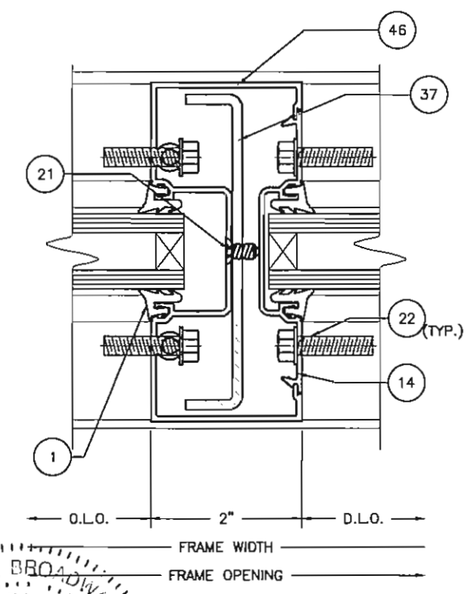


## 7/5 OPTIONAL VERTICAL W/STEEL

SCALE: 1:2

ELIZABETH A. BROADWAY LICENSE No. 38558 STATE OF FLORIDA PROFESSIONAL ENGINEER

ELIZABETH A. BROADWAY
PROFESSIONAL ENGINEER
FLORIDA REGISTRATION NO. 38558
3/28/18

| REV | BY | DATE | DESCRIPTION |
|---|---|---|---|

Coral Architectural Products
3010 RICE MINE ROAD, TUSCALOOSA, AL 35406
PHONE: 800-772-7737 FAX: 800-255-7320

FLORIDA PRODUCT APPROVAL DRAWINGS FOR FL300

STANDARD FRAMING DETAILS

BROADWAY ENGINEERING, P.A.
CIVIL, MECHANICAL, STRUCTURAL AND BUILDING DESIGN
See Us At www.Broadway-Eng.Com
1335 W. Cass Street
Tampa, Florida 33606 813-251-9244
Fax 813-251-9330 Bus. Email: Info@Broadway-Eng.Com
Cadd. Email: DGarr@Broadway-Eng.Com
BE-4882 Certificate of Authorization No. 4599

| | |
|---|---|
| PROJECT NO. | FL300 |
| DRAWN DEG | DATE 3/22/18 |
| CHECKED WS | APPROVED EAB |
| SHEET | 5 OF 17 |

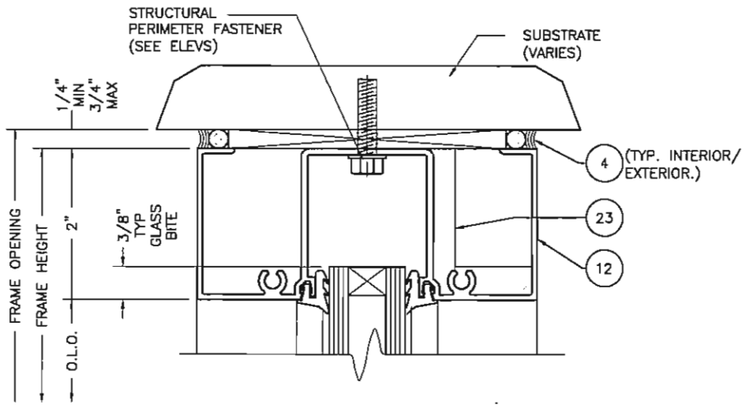


## 1/6 OPTIONAL HEAD

SCALE: 1:2

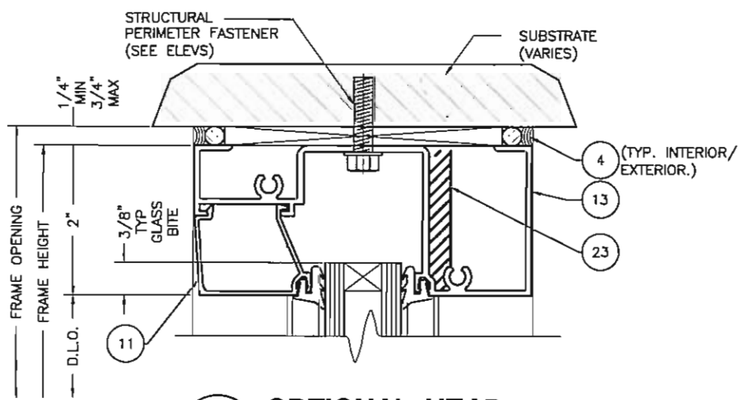


## 2/6 OPTIONAL HEAD

SCALE: 1:2

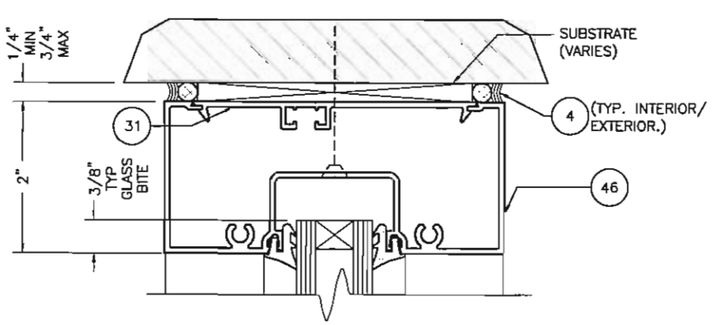


## 3/6 OPTIONAL HEAD

SCALE: 1:2

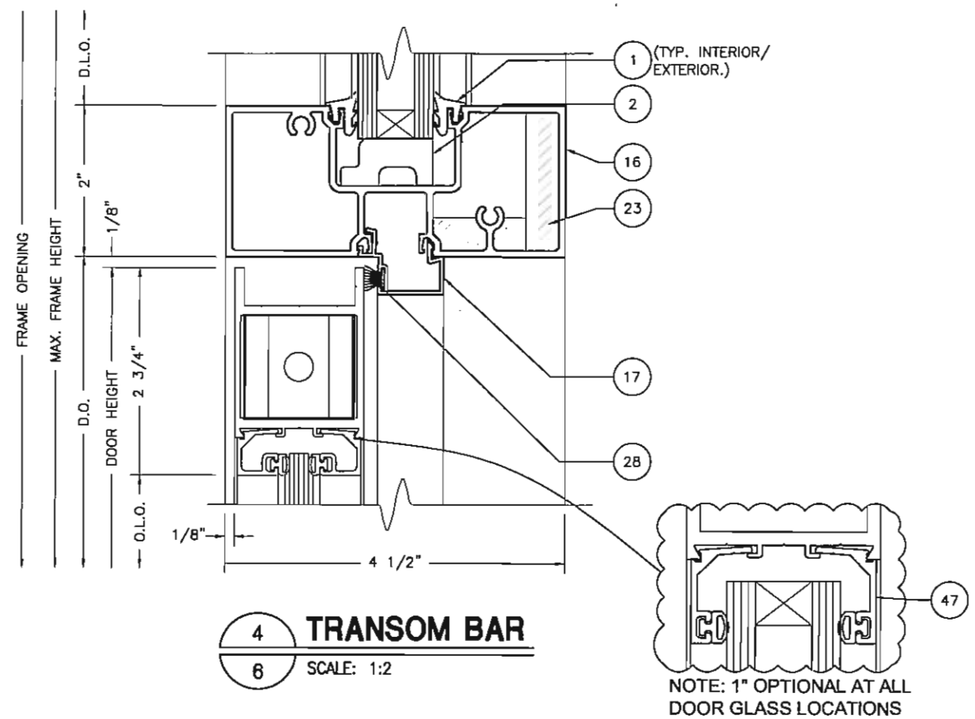


NOTE: 1" OPTIONAL AT ALL DOOR GLASS LOCATIONS

## 4/6 TRANSOM BAR

SCALE: 1:2

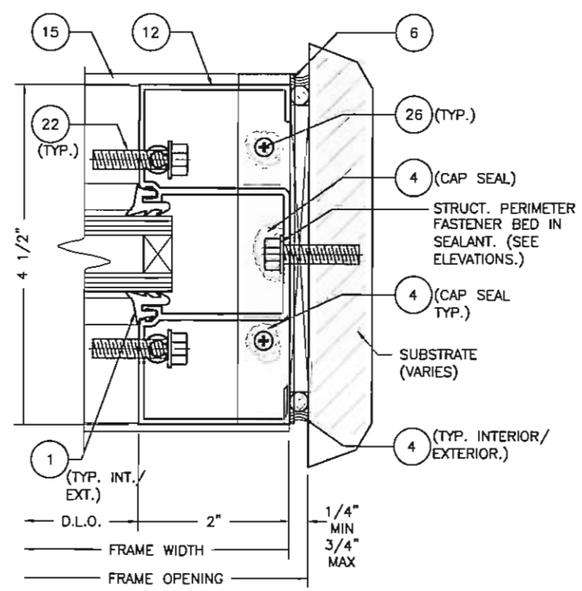


## 5/6 JAMB

SCALE: 1:2

| REV | BY | DATE | DESCRIPTION |
|---|---|---|---|

Coral
Architectural Products
3010 RICE MINE ROAD, TUSCALOOSA, AL 35406
PHONE: 800-772-7737 FAX 800-255-7320

FLORIDA PRODUCT APPROVAL DRAWINGS FOR FL300

STANDARD FRAMING DETAILS

ELIZABETH A. BROADWAY P.E. LICENSE No 38558 STATE OF FLORIDA

ELIZABETH A. BROADWAY 3/28/18
PROFESSIONAL ENGINEER
FLORIDA REGISTRATION NO. 38558

BROADWAY ENGINEERING, P.A.
CIVIL, MECHANICAL, STRUCTURAL AND BUILDING DESIGN
See Us At www.Broadway-Eng.Com
1335 W. Cass Street
Tampa, Florida 33606 813-251-9244
Fax 813-251-9330 Bus. Email: Info@Broadway-Eng.Com
Codd. Email: DGom@Broadway-Eng.Com
BE-4882 Certificate of Authorization No. 4599

| | |
|---|---|
| PROJECT NO. | FL300 |
| DRAWN DEG | DATE 3/22/18 |
| CHECKED WS | APPROVED EAB |
| SHEET | 6 OF 17 |

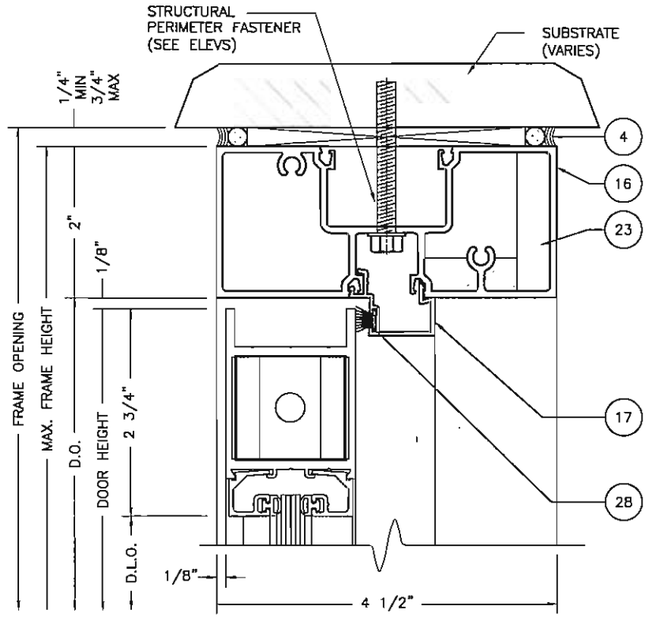


## 1 / 7 DOOR FRAME HEAD

SCALE: 1:2

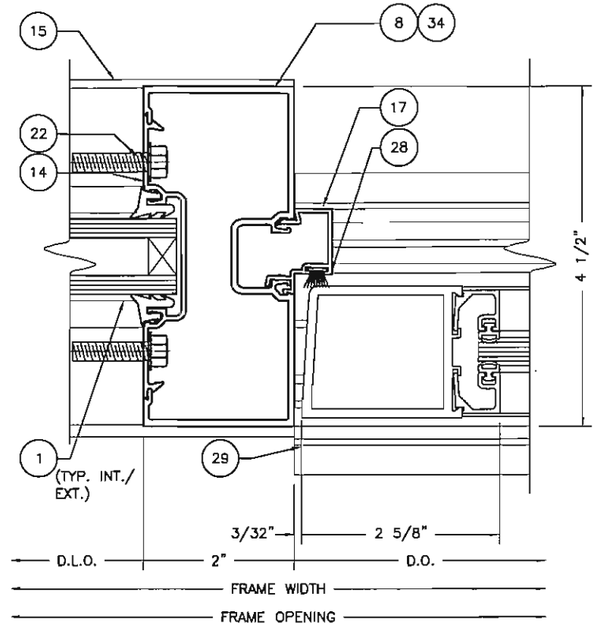


## 2 / 7 INTERM DOOR JAMB

SCALE: 1:2

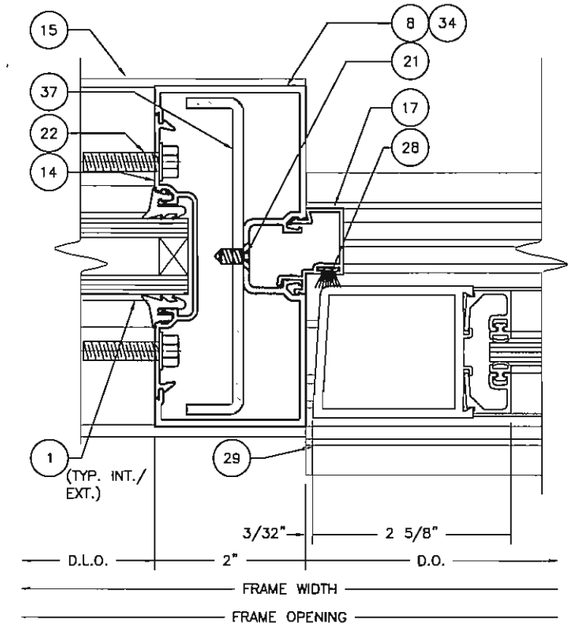


## 3 / 7 INTERM DOOR JAMB W/STEEL

SCALE: 1:2

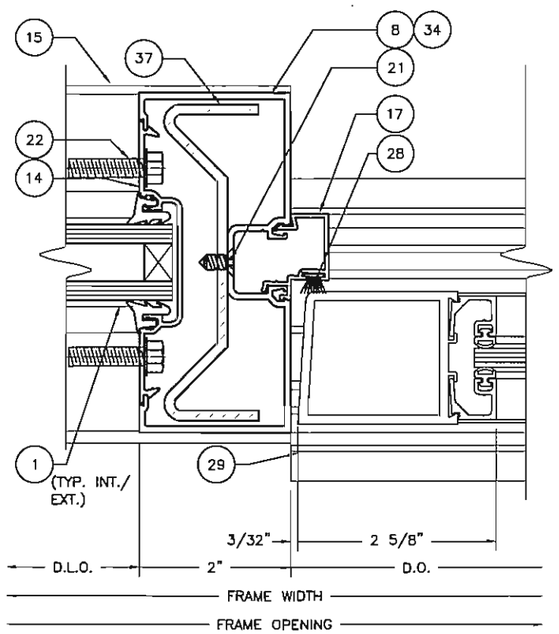


## 4 / 7 INTERM DOOR JAMB W/STEEL

SCALE: 1:2

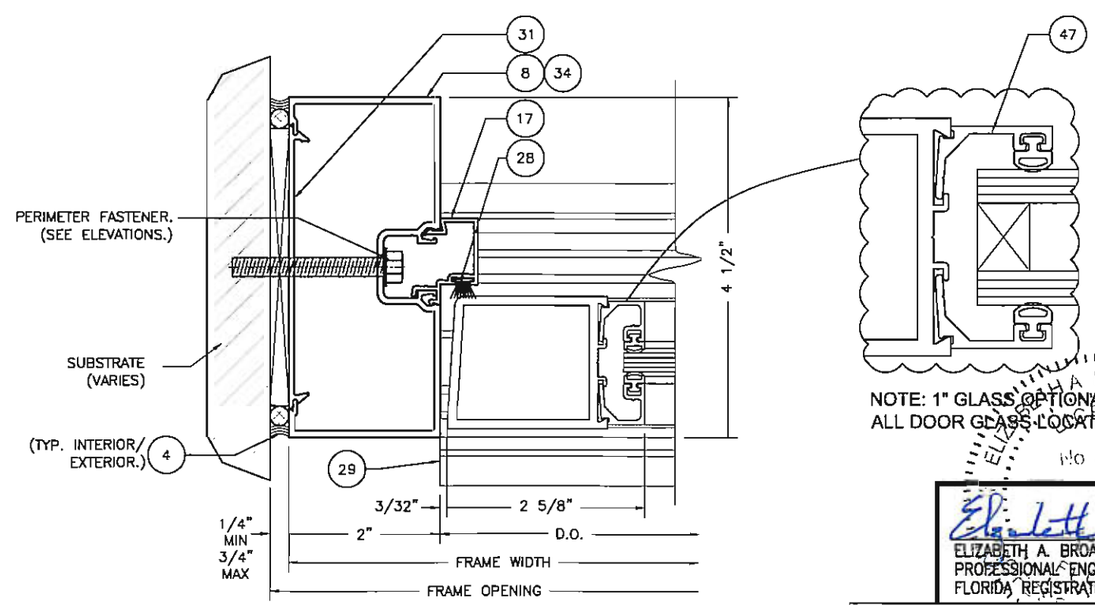


## 5 / 7 DOOR JAMB

SCALE: 1:2

ELIZABETH A. BROADWAY
PROFESSIONAL ENGINEER
FLORIDA REGISTRATION NO. 38558
3/22/18

**BROADWAY ENGINEERING, P.A.**
CIVIL, MECHANICAL, STRUCTURAL AND BUILDING DESIGN
See Us At www.Broadway-Eng.Com
1335 W. Cass Street
Tampa, Florida 33606 813-251-9244
Fax 813-251-9330 Bus. Email: Info@Broadway-Eng.Com
Cadd. Email: DGorr@Broadway-Eng.Com
BE-4882 Certificate of Authorization No. 4599

| REV | BY | DATE | DESCRIPTION |
|---|---|---|---|

Coral
Architectural Products
3010 RICE MINE ROAD TUSCALOOSA, AL 35406
PHONE: 800-772-7737 FAX 800-255-1320

FLORIDA PRODUCT APPROVAL DRAWINGS FOR FL300

DOOR FRAMING DETAILS

| | |
|---|---|
| PROJECT NO. FL300 | |
| DRAWN DEG | DATE 3/22/18 |
| CHECKED WS | APPROVED EAB |
| SHEET 7 OF 17 | |

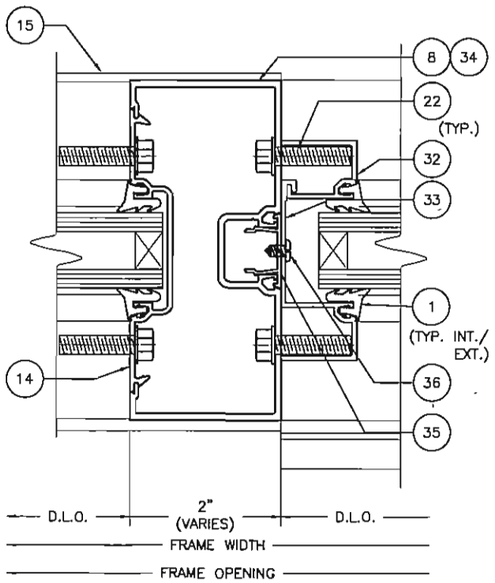


## 1/8 INTERM TRANSOM JAMB

SCALE: 1:2

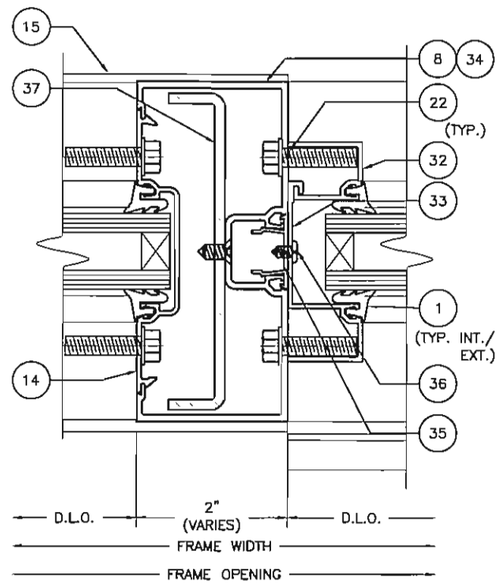


## 2/8 INTERM TRANSOM JAMB W/STEEL

SCALE: 1:2

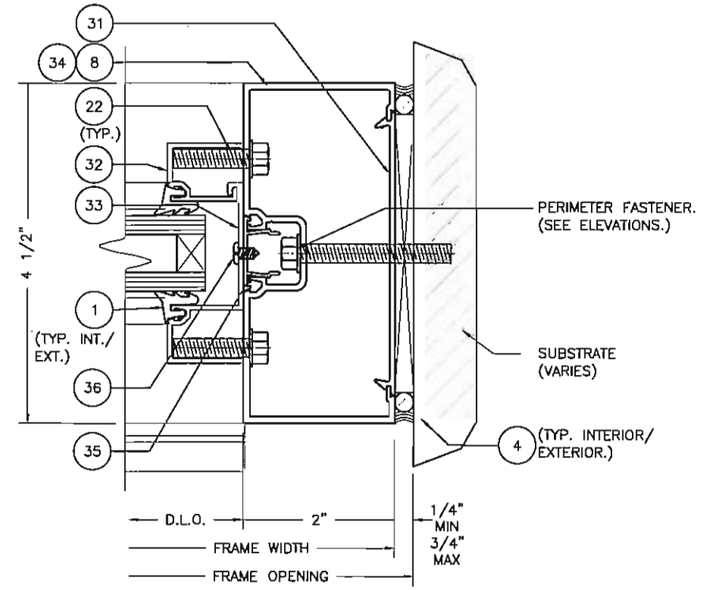


## 3/8 TRANSOM JAMB AT WALL

SCALE: 1:2

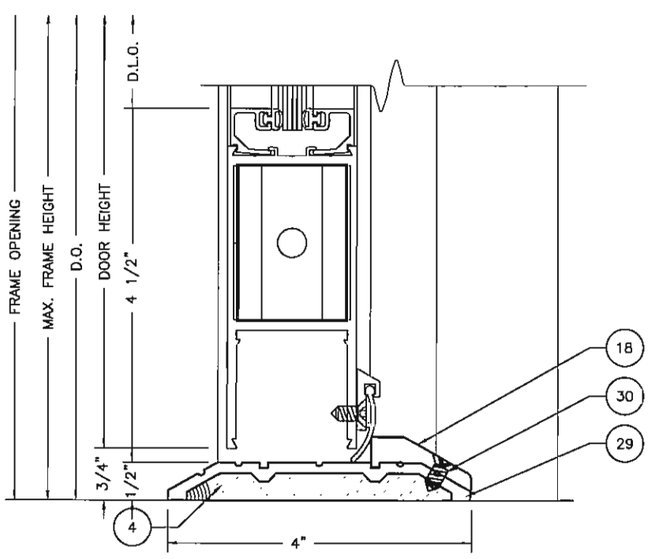


NOTE: (18) AND (30) NOT REQUIRED/OPTIONAL

## 4/8 THRESHOLD

SCALE: 1:2

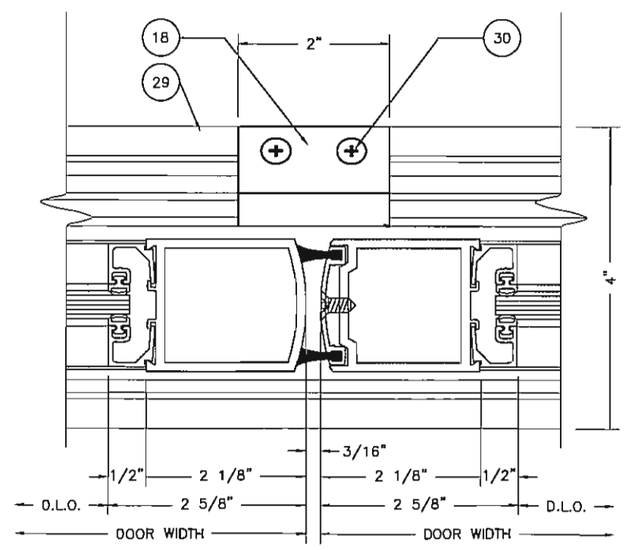


NOTE: (18) AND (30) NOT REQUIRED/OPTIONAL

## 5/8 MEETING STILES

SCALE: 1:2

ELIZABETH A. BROADWAY
LICENSE
No. 33253
STATE OF FLORIDA

ELIZABETH A. BROADWAY
PROFESSIONAL ENGINEER
FLORIDA REGISTRATION NO. 33558

3/28/18

| REV | BY | DATE | DESCRIPTION |
|---|---|---|---|
| | | | |


Coral
Architectural Products
3910 RICE MINE ROAD, TUSCALOOSA, AL 35406
PHONE: 800-772-7737 FAX: 800-255-7320


FLORIDA PRODUCT
APPROVAL DRAWINGS FOR FL300

DOOR FRAMING DETAILS


BROADWAY ENGINEERING, P.A.
CIVIL, MECHANICAL, STRUCTURAL AND BUILDING DESIGN
See Us At www.Broadway-Eng.Com
1335 W. Cass Street
Tampa, Florida 33606 813-251-9244
Fax 813-251-9330 Bus. Email: Info@Broadway-Eng.Com
Codd. Email: DGorr@Broadway-Eng.Com
BE-4882 Certificate of Authorization No. 4599


| | |
|---|---|
| PROJECT NO. | FL300 |
| DRAWN DEG | DATE 3/22/18 |
| CHECKED WS | APPROVED EAB |
| SHEET | 8 OF 17 |

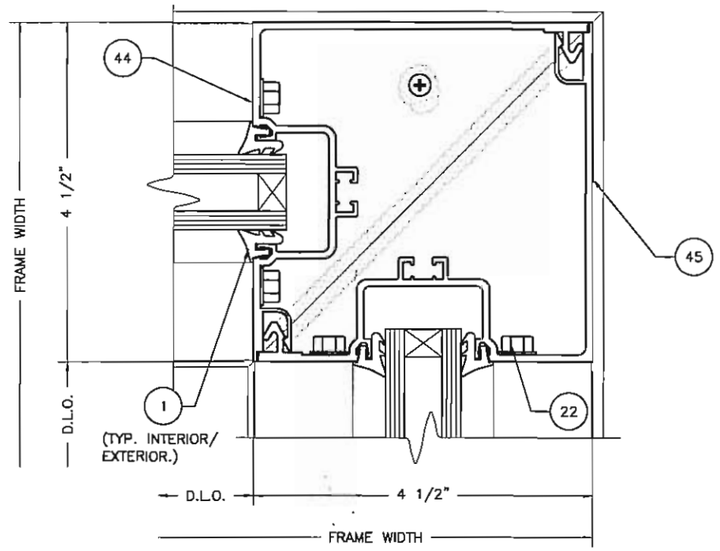


1/9 **90 DEGREE CORNER POST**

SCALE: 1:2

| REV | BY | DATE | DESCRIPTION |
|---|---|---|---|

Coral
Architectural Products
3010 RICE MINE ROAD, TUSCALOOSA, AL 35406
PHONE: 800-772-7737 FAX: 800-255-7320

FLORIDA PRODUCT
APPROVAL DRAWINGS FOR FL300

CORNER FRAMING DETAILS

ELIZABETH A. BROADWAY
LICENSE
No. 38558
STATE OF FLORIDA

ELIZABETH A. BROADWAY
PROFESSIONAL ENGINEER
FLORIDA REGISTRATION NO. 38558
3/22/18

BROADWAY ENGINEERING, P.A.
CIVIL, MECHANICAL, STRUCTURAL AND BUILDING DESIGN
See Us At www.Broadway-Eng.Com
1335 W. Cass Street
Tampa, Florida 33606 613-251-9244
Fax 813-251-9330 Bus. Email: Info@Broadway-Eng.Com
Codd. Email: DGarr@Broadway-Eng.Com
BE-4882 Certificate of Authorization No. 4599

| | |
|---|---|
| PROJECT NO. | FL300 |
| DRAWN DEG | DATE 3/22/18 |
| CHECKED WS | APPROVED EAB |
| SHEET | 9 OF 17 |

## BILL OF MATERIALS

| ITEM | PIN | DESCRIPTION | DIMENSIONS | MATERIAL | MANUFACTURE | NOTES |
|---|---|---|---|---|---|---|
| 1 | NG1 | GLAZING GASKET | .197 SPACE | EPDM | VARIES | USED ON EXT AND INT |
| 2 | SB3 | SETTING BLOCK | 1.50 X 4.00 X .625 | EPDM | VARIES | "2" EACH PER LITE OF GLASS MEETS ASTM C864 |
| 3 | WD300-1 | WATER DEFLECTOR | VARIABLE SPACE | RIG ID PVC | CORAL | LOCATE ONE AT EACH END OF HORIZ |
| 4 | 795 | JOINT PERIMETER SEALANT | VARIABLE SPACE | SILICONE | DOW OR TREMCO | |
| 5 | CS101-1 | SETTING CHAIR | .853 X 1.544 X .062 | 6063-T6 ALUMINUM | CORAL | |
| 6 | ED319-1 | END DAM | .75 X 2.188 X .062 | 6063-T6 ALUMINUM | CORAL | FABRICATED LENGTH = 4.625" |
| 7 | FL304 | VERTICAL MULLION | 2.00 X 4.5 X .070 | 6063-T6 ALUMINUM | CORAL | |
| 8 | FL309 | DOOR JAMB | 2.00 X 4.5 X .080 | 6063-T6 ALUMINUM | CORAL | |
| 9 | FL316 | HEAVY VERTICAL MULLION | 2.00 X 4.5 X .190 | 6063-T6 ALUMINUM | CORAL | |
| 10 | FL306 | HORIZONTAL | 2.00 X 4.460 X .070 | 6063-T6 ALUMINUM | CORAL | |
| 11 | FL303 | GLASS STOP | 1.207 X 1.543 X .050 | 6063-T6 ALUMINUM | CORAL | |
| 12 | FL301 | HEAD/WALL JAMB | 2.00 X 4.4 X .070 | 6063-T6 ALUMINUM | CORAL | |
| 13 | FL302 | SILL/HEAD | 2.00 X 4.460 X .070 | 6063-T6 ALUMINUM | CORAL | |
| 14 | FL305 | OPEN BACK POCKET FILLER | .562 X 3.75 X .062 | 6063-T6 ALUMINUM | CORAL | |
| 15 | FL319 | SUBSILL FLASHING | 2.125 X 4.714 X .078 | 6063-T6 ALUMINUM | CORAL | |
| 16 | FL307 | DOOR HEADER | 2.00 X 4.500 X .085 | 6063-T6 ALUMINUM | CORAL | |
| 17 | DS200 | DOOR STOP | .500 X 1.019 X .050 | 6063-T6 ALUMINUM | CORAL | |
| 18 | DP200-1 | PANIC STOP | 1.323 X .402 X .188 | 6063-T6 ALUMINUM | CORAL | FABRICATED LENGTH = 2.00" |
| 19 | SR101 | 10GA A-36 STL | 1.25 X 4.18 X .134 | PRIMED STEEL | VARIES | USED AT DOOR JAMB AND VERTICAL MULLIONS AS REQUIRED |
| 20 | SR105 | 1/4" A-36 STL | .75 X 4.188 X .250 | PRIMED STEEL | VARIES | USED AT DOOR JAMB AND VERTICAL MULLIONS AS REQUIRED |
| 21 | AS23 | ATTACH STL TO MULLIONS | #12-24 X 3/8" UCPHH | | | ATTACH 4" FROM TOP, 4" FROM BOTTOM, @ CENTER LINE |
| 22 | AS16 | TYP SPLINE SCREW | #14 X 1" HHSTS | STEEL | VARIES | TYPICAL SPLINE SCREW |
| 23 | SM5601 | JOINT TAPE | | | | USED AT ALL HORIZONTAL INTERSECTIONS |
| 24 | FASTENER | FOR ATTACHING SUBSILL TO STEEL /WOOD SUBSTRATE | 3/16" X 2" PHSMB | STEEL/WOOD | VARIES | |
| 25 | FASTENER | FOR ATTACHING SUBSILL TO CONCRETE SUBSTRATE | 3/16" X 2" PH CONCRETE SCREW | CONCRETE | VARIES | |
| 26 | AS31 | ED319-1 TO FL319 | #6 X 3/8" PPH | STEEL | | "2" EACH ATTACH END DAM TO SUBSILL |
| 27 | SB4 | SETTING BLOCK | 1.25 X 4 X .438 | EPDM | VARIES | "2" EACH PER LITE OF GLASS MEETS ASTM C864 |
| 28 | WOOL PILE | DOOR STOP WEATHERING | .125 SPACE | WOOL | VARIES | |
| 29 | TH4 | THRESHOLD | .50 X 4.00 X .125 | 6063-T6 ALUMINUM | CORAL | |
| 30 | AS5 | FASTENER | 310 X 1/2" PFH | STEEL | VARIES | |
| 31 | CS104 | FLAT FILLER PLATE | .265 X 3.750 X .070 | 6063-T6 ALUMINUM | CORAL | |
| 32 | FL518 | TRANSOM SASH | .7670 X 1.00 X .063 | 6063-T6 ALUMINUM | CORAL | |
| 33 | CS115 | TRANSOM SASH | 2.391 X 1.00 X .063 | 6063-T6 ALUMINUM | CORAL | |
| 34 | FL349 | HEAVY DOOR MULLION | 2.00 X 4.5 X .1352 | 6063-T6 ALUMINUM | CORAL | |
| 35 | CS105 | POCKET FILLER | .480 X 1 X .040 | 6063-T6 ALUMINUM | CORAL | |
| 36 | AS2 | FASTENER | #8 X 1/2" PPH | STEEL | VARIES | ATTACH @ 12" O.C. |
| 37 | SR102 | 10GA A-36 STL | .75 X 4.188 X .134 | PRIMED STEEL | VARIES | USED AT DOOR JAMB AND VERTICAL MULLIONS AS REQUIRED |
| 38 | VG10 | GASKET | .197 SPACE | EPDM | VARIES | |
| 39 | CS118 | MALE HEAD RECEPTOR | 1.531 X 1.465 X .062 | 6063-T6 ALUMINUM | CORAL | |
| 40 | CS119 | FEMALE HEAD RECEPTOR | 4.786 X 1.562 X .062 | 6063-T6 ALUMINUM | CORAL | |
| 41 | FL310 | MALE EXPANSION MULLION | 4.5 X 1.7870 X .078 | 6063-T6 ALUMINUM | CORAL | |
| 42 | FL311 | FEMALE EXPANSION MULLION | 4.5 X 1.3680 X .078 | 6063-T6 ALUMINUM | CORAL | |
| 43 | FL340 | SUBSILL | 4.7880 X 2.5 X .093 | 6063-T6 ALUMINUM | CORAL | |
| 44 | FL353 | CORNER POST | 4.5 X 4.5 X .093 | 6063-T6 ALUMINUM | CORAL | |
| 45 | FL351 | CORNER POST | 4.5 X 4.5 X .093 | 6063-T6 ALUMINUM | CORAL | |
| 46 | FL314 | VERTICAL MULLION | 2 X 4.5 X .078 | 6063-T6 ALUMINUM | CORAL | |
| 47 | DG101 | DOOR GLASS STOP | .8604 X .539 X .055 | 6063-T6 ALUMINUM | CORAL | |

ELIZABETH A. BROADWAY
LICENSE
NO. 38558
STATE OF
FLORIDA

ELIZABETH A. BROADWAY 3/28/18
PROFESSIONAL ENGINEER
FLORIDA REGISTRATION NO. 38558


BROADWAY ENGINEERING, P.A.
CIVIL, MECHANICAL, STRUCTURAL AND BUILDING DESIGN
See Us At www.Broadway-Eng.Com
1335 W. Cass Street
Tampa, Florida 33606 813-251-9244
Fax 813-251-9330 Bus. Email: Info@Broadway-Eng.Com
Cadd. Email: DGarr@Broadway-Eng.Com
BE-4882 Certificate of Authorization No. 4599


DESCRIPTION


Coral
Architectural Products
3010 RICE MINE ROAD TUSCALOOSA, AL 35406
PHONE: 800-772-1737 FAX: 800-255-7200


FLORIDA PRODUCT
APPROVAL DRAWINGS FOR FL300

BILL OF MATERIALS

| | |
|---|---|
| PROJECT NO. | FL300 |
| DRAWN DEG | DATE 3/22/18 |
| CHECKED WS | APPROVED EAB |
| SHEET | 10 OF 17 |

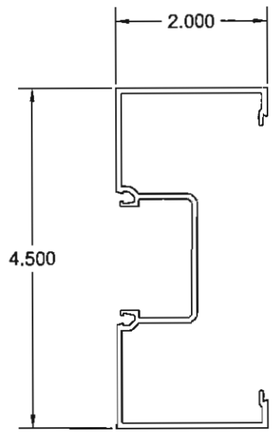


7 VERTICAL MULLION

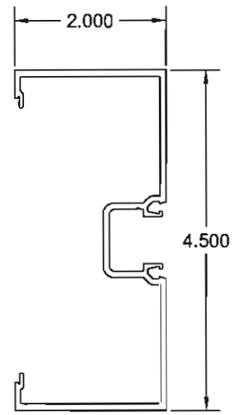


8 DOOR JAMB

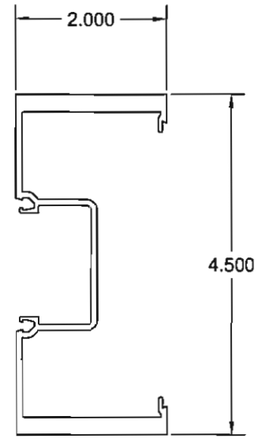


9 HEAVY VERTICAL

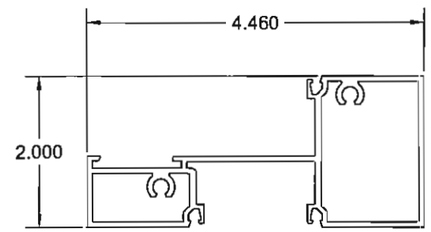


10 HORIZONTAL MULLION

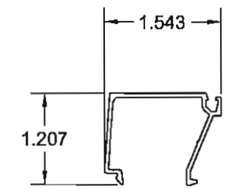


11 GLASS STOP

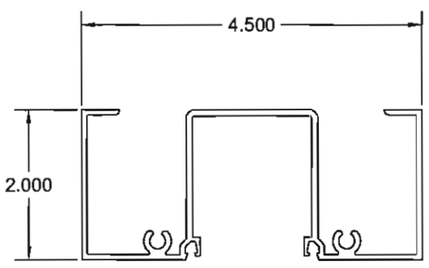


12 HEAD

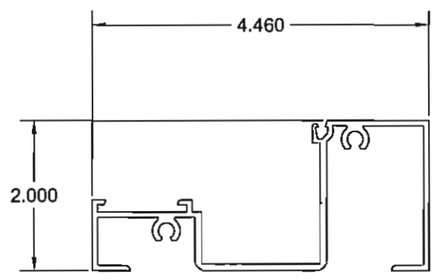


13 SILL

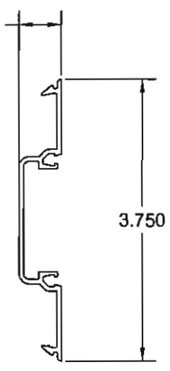


14 OPEN BACK MULLION FILLER

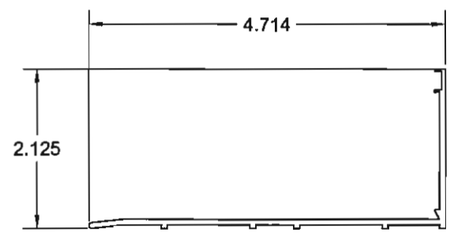


15 SUBSILL

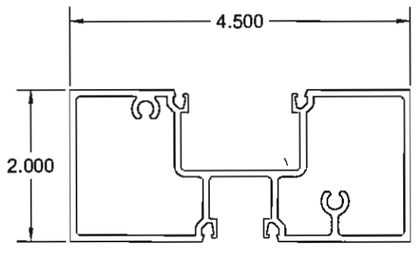


16 DOOR HEAD

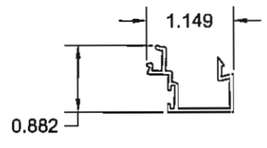


17 DOOR STOP

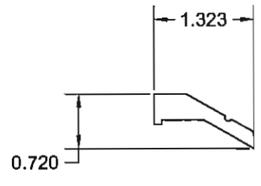


18 PANIC STOP

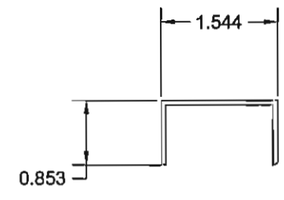


5 SETTING CHAIR

| REV | BY | DATE | DESCRIPTION |
|---|---|---|---|

Coral
Architectural Products
3010 RICE MINE ROAD TUSCALOOSA, AL 35406
PHONE: 800-772-7737 FAX: 800-255-7200

FLORIDA PRODUCT APPROVAL DRAWINGS FOR FL300

DIE DRAWINGS

ELIZABETH A. BROADWAY
LICENSE
No 38558
STATE OF FLORIDA

ELIZABETH A. BROADWAY
PROFESSIONAL ENGINEER
FLORIDA REGISTRATION NO. 38558
3/23/18

BROADWAY ENGINEERING, P.A.
CIVIL, MECHANICAL, STRUCTURAL AND BUILDING DESIGN
See Us At www.Broadway-Eng.Com
1335 W. Cass Street
Tampa, Florida 33606 813-251-9244
Fax 813-251-9330 Bus. Email: Info@Broadway-Eng.Com
Cadd. Email: DGorr@Broadway-Eng.Com
BE-4862 Certificate of Authorization No. 4599

| PROJECT NO. FL300 | |
|---|---|
| DRAWN DEG | DATE 3/22/18 |
| CHECKED WS | APPROVED EAB |
| SHEET 11 OF 17 | |

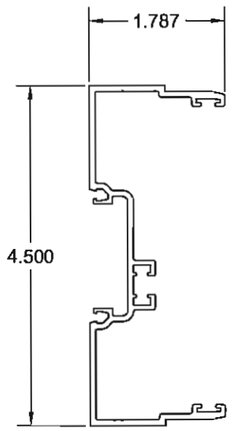


41 EXPANSION MULLION

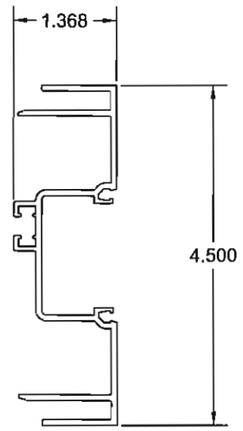


42 EXPANSION MULLION

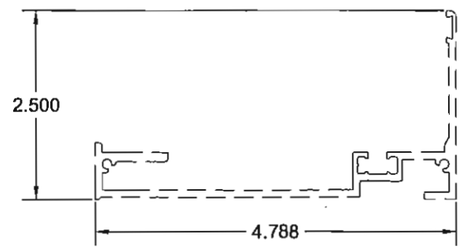


43 HIGH PERFORMANCE SUBSILL

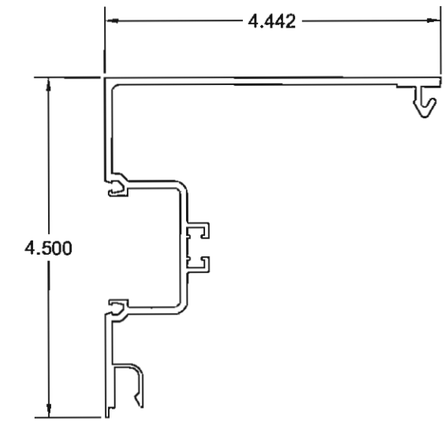


44 CORNER POST

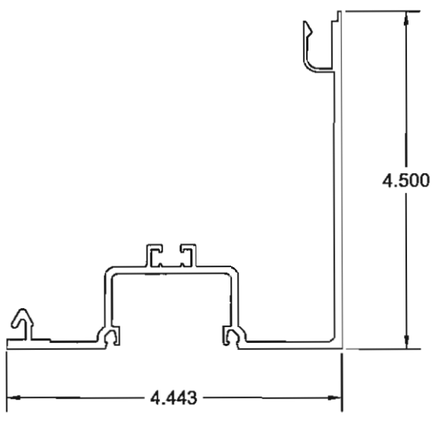


45 CORNER POST

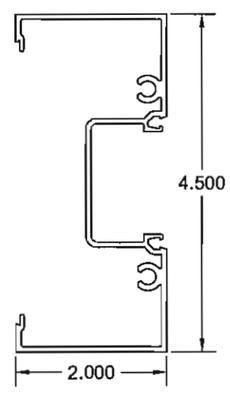


46 VERTICAL MULLION

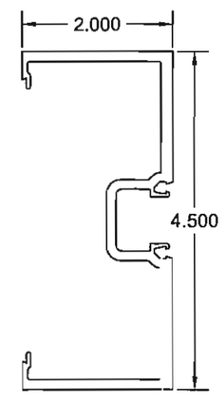


34 HEAVY DOOR MULLION

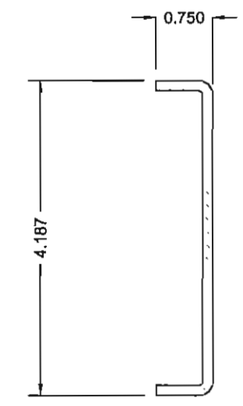


37 REINFORCING STEEL

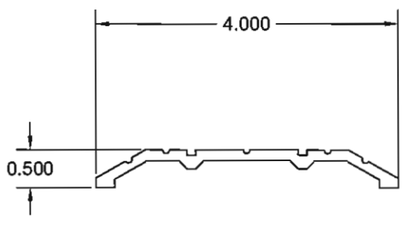


29 THRESHOLD

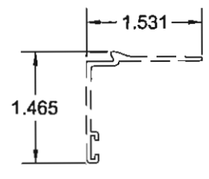


39 HEAD RECEPTOR

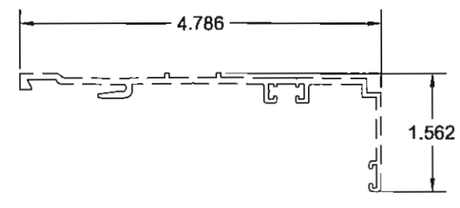


40 HEAD RECEPTOR

| REV | BY | DATE | DESCRIPTION |
|---|---|---|---|

Coral
Architectural Products
3010 RICE MINE ROAD TUSCALOOSA, AL 35406
PHONE: 800-772-7737 FAX: 800-255-1320

FLORIDA PRODUCT APPROVAL DRAWINGS FOR FL300

DIE DRAWINGS

ELIZABETH A. BROADWAY LICENSE No. 38558

ELIZABETH A. BROADWAY
PROFESSIONAL ENGINEER
FLORIDA REGISTRATION NO. 38558
3/23/18

BROADWAY ENGINEERING, P.A.
CIVIL, MECHANICAL, STRUCTURAL AND BUILDING DESIGN
See Us At www.Broadway-Eng.Com
1335 W. Cass Street
Tampa, Florida 33606 813-251-9244
Fax 813-251-9330 Bus. Email: Info@Broadway-Eng.Com
Codd. Email: DGorr@Broadway-Eng.Com
BE-4862 Certificate of Authorization No. 4599

| | |
|---|---|
| PROJECT NO. FL300 | |
| DRAWN DEG | DATE 3/22/18 |
| CHECKED WS | APPROVED EAB |
| SHEET 12 OF 17 | |

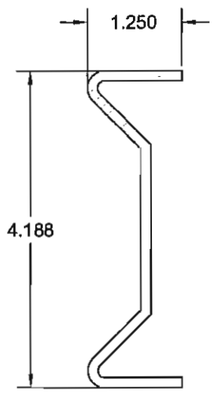


19 REINFORCING STEEL

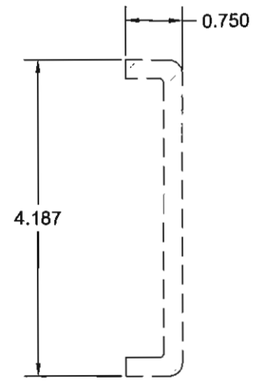


20 REINFORCING STEEL

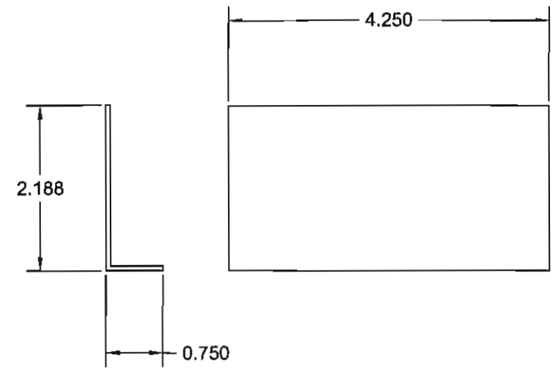


6 END DAM

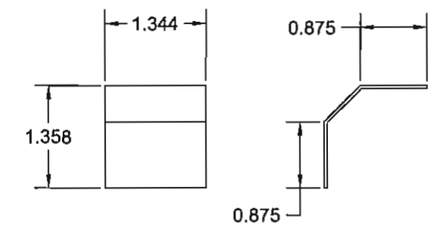


3 WATER DIVERTER

1 EXT. GLAZING GASKET

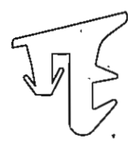

2 SETTING BLOCK

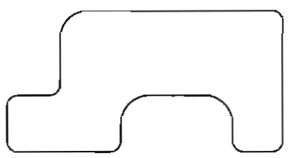

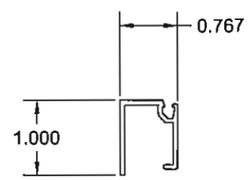


32 SASH

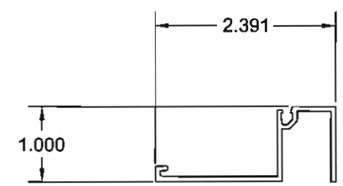


33 SASH

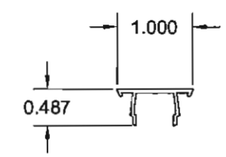


35 POCKET FILLER

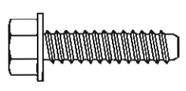

22 AS16

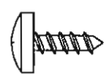

26 AS21

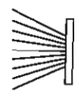

28 WEATHERING

30 AS5

38 GASKET

47 DOOR GLASS STOP

| REV | BY | DATE | DESCRIPTION |
|---|---|---|---|
| | | | |

Coral
Architectural Products
3010 RICE MINE ROAD, TUSCALOOSA, AL 35406
PHONE: 800-772-7737 FAX: 800-255-1320

FLORIDA PRODUCT APPROVAL DRAWINGS FOR FL300

DIE DRAWINGS

ELIZABETH A. BROADWAY
LICENSE
No. 38558
STATE OF FLORIDA

ELIZABETH A. BROADWAY
PROFESSIONAL ENGINEER
FLORIDA REGISTRATION NO. 38558
3/28/18

BROADWAY ENGINEERING, P.A.
CIVIL, MECHANICAL, STRUCTURAL AND BUILDING DESIGN
See Us At www.Broadway-Eng.Com
1335 W. Cass Street
Tampa, Florida 33606 813-251-9244
Fax 813-251-9330 Bus. Email: Info@Broadway-Eng.Com
Codd. Email: DGort@Broadway-Eng.Com
BE-4862 Certificate of Authorization No. 4599

| | |
|---|---|
| PROJECT NO. | FL300 |
| DRAWN DEG | DATE 3/22/18 |
| CHECKED WS | APPROVED EAB |
| SHEET | 13 OF 17 |

PERIMETER FASTENERS:

1. TYPICAL INSTALLATION INTO SUBSTRATES
   A. 3000 PSI CONCRETE
   B. STEEL, 18 GA. MIN.
   C. HOT ROLLED STEEL, 1/8" MIN. THICKNESS
   D. SO. PINE, GRADE NO. 2 OR BETTER

2. FIRST ANCHOR IS 2" FROM EDGE OF VERTICAL. EACH ADDITIONAL FASTENER IS AT REQUIRED MIN. SPACING.

ANCHOR LENGTHS ARE SHOWN TO MEET MINIMUM EMBEDMENT.

DOOR PAIR DEPICTED, SINGLE DOORS QUALIFIED BY SAME.

FOR DOOR FRAMES WITHOUT SIDELITES, ANCHORING SHALL BE DUPLICATED ON BOTH JAMBS AS SHOWN (PAIRS AND/ OR SINGLES).

| DOOR FRAME JAMB ANCHORS<br>#14 X 3" PAN OR HEX HEAD WOOD SCREW | |
|---|---|
| LOCATION | SPACING |
| FROM BOTTOM OF FRAME (3) TOTAL | 11-1/2", 14-1/2", 17-1/2" |
| FROM CENTERLINE (4) TOTAL | 1-1/2", 4-1/2" ABOVE CENTERLINE<br>1-1/2", 4-1/2" BELOW CENTERLINE |
| FROM BOTTOM OF DOOR HEADER (3) TOTAL | 11-1/2", 14-1/2", 17-1/2" |

NOTE:
DOOR FRAMES WITH AND WITHOUT TRANSOM SHALL BE ANCHORED AS SHOWN ON CHART ABOVE.

**HEAD AND SILL**
#14 X 3" WOOD SCREWS WITH 2" MIN. EMBEDMENT, 1-3/4" MIN. EDGE DISTANCE. LOCATE FIRST ANCHOR 2" FROM EDGE OF MULLION AND ADDITIONAL FASTENERS @ 3" MIN. SPACING .

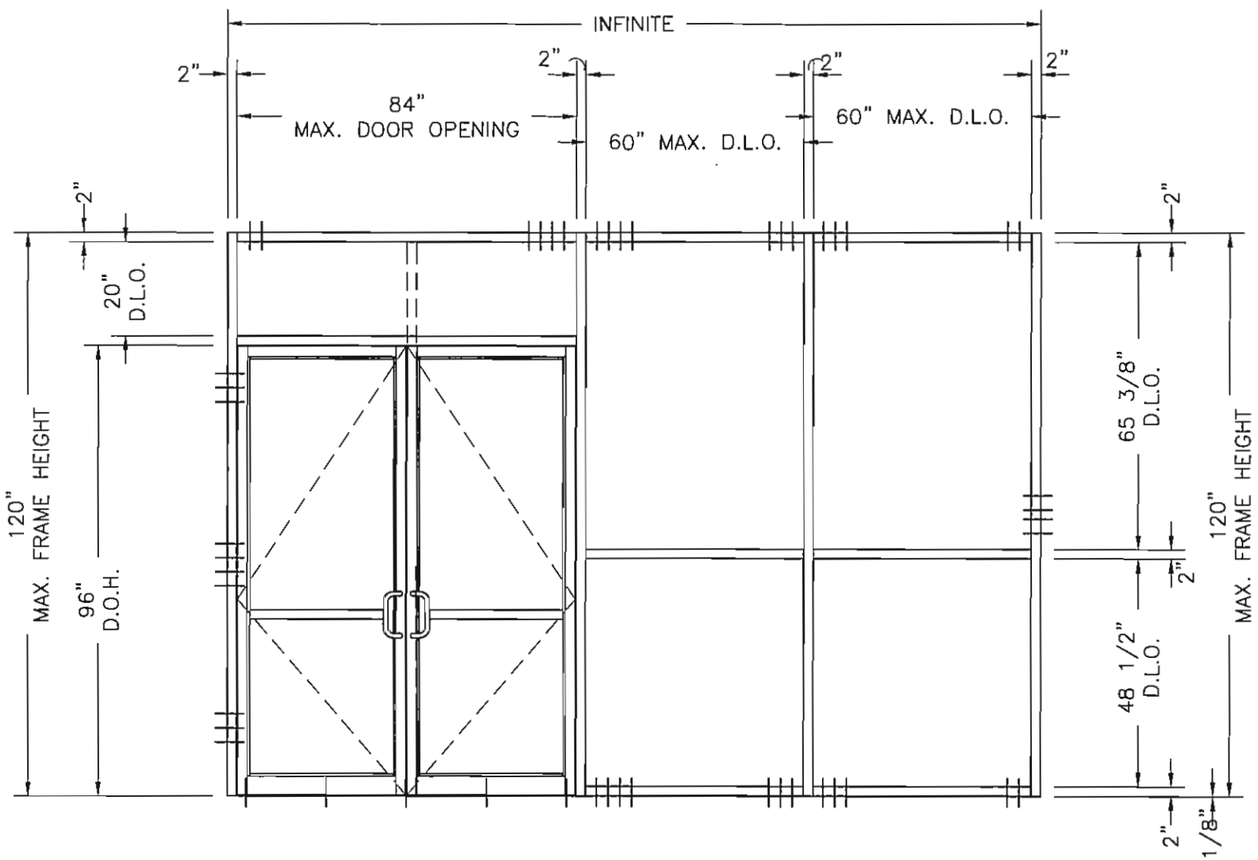


# WOOD SUBSTRATE - 3" THICK ANCHOR LOCATIONS

**JAMB**
#14 X 3" WOOD SCREWS WITH 2" MIN. EMBEDMENT, 1-3/4" MIN. EDGE DISTANCE. LOCATE (1) ANCHOR @ 1-1/2" ABOVE AND BELOW CENTERLINE AND ADDITIONAL FASTENERS @ 3" MIN. SPACING .

| THRESHOLD ANCHORS<br>1/4" X 2-1/2" FHP TAPCON OR EQUAL - 1-3/4" MINIMUM EMBEDMENT, 2-1/2" MIN. EDGE DISTANCE | |
|---|---|
| SINGLE DOORS UP TO 48" (3 ANCHORS TOTAL) | (1) EACH 4" FROM EACH JAMB |
| | (1) EACH AT CENTER LINE OF DOOR OPENING |
| PAIRS DOORS UP TO 96" (5 ANCHORS TOTAL) | (1) EACH AT 4" FROM EACH JAMB |
| | (1) EACH AT CENTER LINE OF DOOR OPENING |
| | (1) EACH BETWEEN CENTER LINE AND JAMB ANCHORS |

**NOTE:**
WOOD FRAMING THAT IS LESS THAN 2-1/2" SHALL BE CONSIDERED BLOCKING. STOREFRONT FRAMING SHALL BE FASTENED THROUGH WOOD INTO STEEL OR CONCRETE SUBSTRATE.

**NOTE:**
MULLION JAMB ANCHORS MAY BE OMITTED FOR HEIGHTS LESS THAN 9'-0"

ELIZABETH A. BROADWAY
PROFESSIONAL ENGINEER
FLORIDA REGISTRATION NO. 38558
3/22/18


BROADWAY ENGINEERING, P.A.
CIVIL, MECHANICAL, STRUCTURAL AND BUILDING DESIGN
See Us At www.Broadway-Eng.Com
1335 W. Cass Street
Tampa, Florida 33606 813-251-9244
Fax 813-251-9330 Bus. Email: Info@Broadway-Eng.Com
Cadd. Email: DGorr@Broadway-Eng.Com
BE-4862 Certificate of Authorization No. 4599


| REV | BY | DATE | DESCRIPTION |
|---|---|---|---|


Coral
Architectural Products
3010 RICE MINE ROAD, TUSCALOOSA, AL 35406
PHONE 800-772-7737 FAX: 800-255-7320


FLORIDA PRODUCT APPROVAL DRAWINGS FOR FL300

WOOD FASTENER LOCATIONS

| | |
|---|---|
| PROJECT NO. FL300 | |
| DRAWN DEG | DATE 3/22/18 |
| CHECKED WS | APPROVED EAB |
| SHEET 14 OF 17 | |

PERIMETER FASTENERS:

1. TYPICAL INSTALLATION INTO SUBSTRATES
   A. 3000 PSI CONCRETE
   B. STEEL, 18 GA. MIN.
   C. HOT ROLLED STEEL, 1/8" MIN. THICKNESS
   D. SO. PINE, GRADE NO. 2 OR BETTER

2. FIRST ANCHOR IS 2" FROM EDGE OF VERTICAL. EACH ADDITIONAL FASTENER IS AT REQUIRED MIN. SPACING.

ANCHOR LENGTHS ARE SHOWN TO MEET MINIMUM EMBEDMENT.

DOOR PAIR DEPICTED, SINGLE DOORS QUALIFIED BY SAME.

FOR DOOR FRAMES WITHOUT SIDELITES, ANCHORING SHALL BE DUPLICATED ON BOTH JAMBS AS SHOWN (PAIRS AND/ OR SINGLES).

| DOOR FRAME JAMB ANCHORS<br>1/4" X 3" HEX OR FLAT HEAD TAPCONS | |
|---|---|
| LOCATION | SPACING |
| FROM BOTTOM OF FRAME<br>(2) TOTAL | 8-1/2", 12-1/2" |
| FROM CENTERLINE<br>(2) TOTAL | 2" ABOVE CENTERLINE<br>2" BELOW CENTERLINE |
| FROM BOTTOM OF<br>DOOR HEADER<br>(2) TOTAL | 8-1/2", 12-1/2" |

NOTE:
DOOR FRAMES WITH AND WITHOUT TRANSOM SHALL BE ANCHORED AS SHOWN ON CHART ABOVE.

**HEAD AND SILL**
1/4" X 2-1/2" TAPCON WITH 1-3/4" MIN. EMBEDMENT, MIN. 4" SPACING, 2-1/2" MIN. EDGE DISTANCE. LOCATE FIRST ANCHOR 2" FROM EDGE OF MULLION AND ADDITIONAL FASTENERS @ 4" MIN. SPACING .

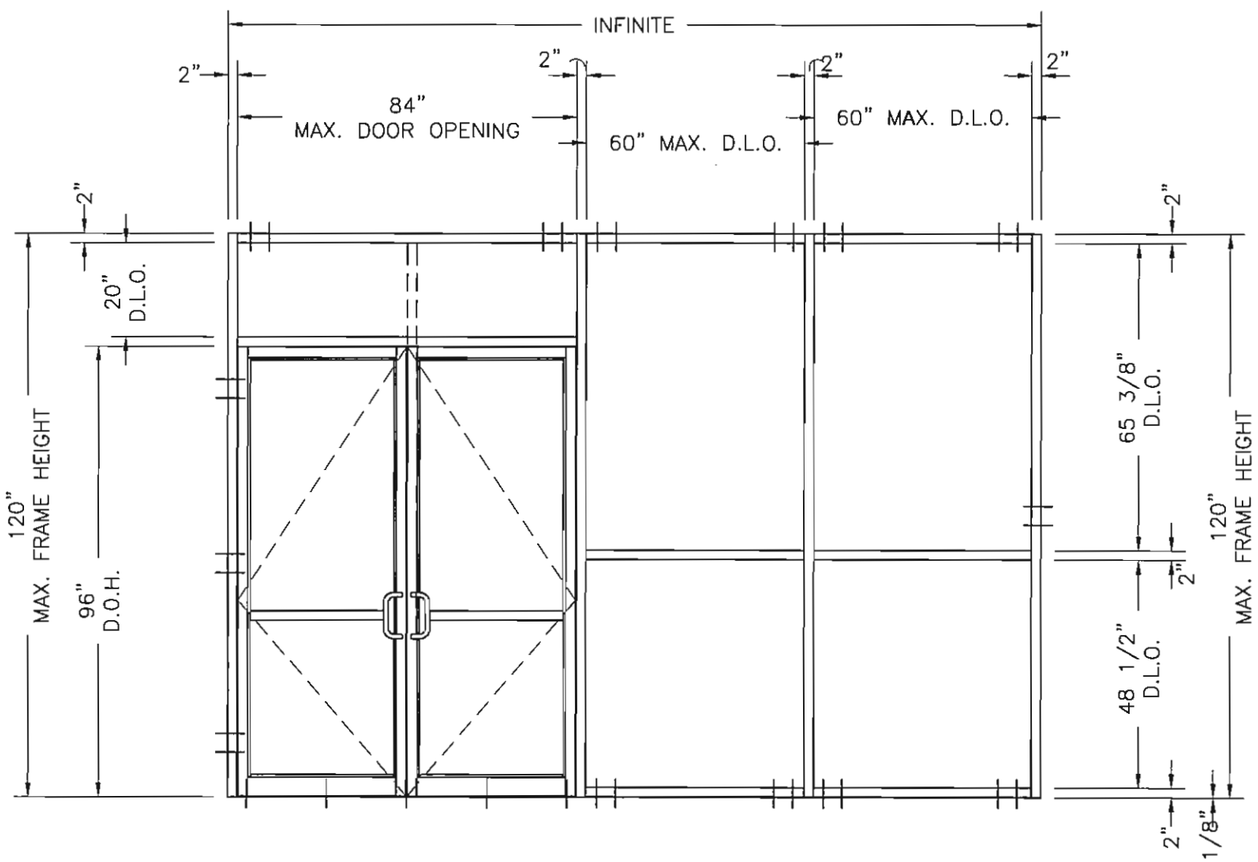


# CONCRETE SUBSTRATE ANCHOR LOCATIONS

| THRESHOLD ANCHORS<br>1/4" X 2-1/2" FHP TAPCON OR EQUAL - 1-3/4" MINIMUM EMBEDMENT, 2-1/2" MIN. EDGE DISTANCE | |
|---|---|
| SINGLE DOORS UP TO 48"<br>(3 ANCHORS TOTAL) | (1) EACH 4" FROM EACH JAMB |
| | (1) EACH AT CENTER LINE OF DOOR OPENING |
| PAIRS DOORS UP TO 96"<br>(5 ANCHORS TOTAL) | (1) EACH AT 4" FROM EACH JAMB |
| | (1) EACH AT CENTER LINE OF DOOR OPENING |
| | (1) EACH BETWEEN CENTER LINE AND JAMB ANCHORS |

**JAMB**
1/4" X 2-1/2" TAPCON WITH 1-3/4" MIN. EMBEDMENT, 2-1/2" MIN. EDGE DISTANCE. LOCATE (1) ANCHOR @ 2" ABOVE AND BELOW CENTERLINE

**NOTE:**
MULLION JAMB ANCHORS MAY BE OMITTED FOR HEIGHTS LESS THAN 9'-0"

ELIZABETH A. BROADWAY P.E. LICENSE No. 38558 STATE OF FLORIDA PROFESSIONAL ENGINEER

ELIZABETH A. BROADWAY
PROFESSIONAL ENGINEER
FLORIDA REGISTRATION NO. 38558
3/22/18


BROADWAY ENGINEERING, P.A.
CIVIL, MECHANICAL, STRUCTURAL AND BUILDING DESIGN
See Us At www.Broadway-Eng.Com
1335 W. Cass Street
Tampa, Florida 33606 813-251-9244
Fax 813-251-9330 Bus. Email: Info@Broadway-Eng.Com
Cadd. Email: DGarr@Broadway-Eng.Com
BE-4862 Certificate of Authorization No. 4599


| REV | BY | DATE | DESCRIPTION |
|---|---|---|---|


Coral Architectural Products
3019 RICE MINE ROAD TUSCALOOSA, AL 35406
PHONE: 800-772-1737 FAX: 800-255-7320


FLORIDA PRODUCT APPROVAL DRAWINGS FOR FL300

CONCRETE FASTENER LOCATIONS

| | |
|---|---|
| PROJECT NO. FL300 | |
| DRAWN DEG | DATE 3/22/18 |
| CHECKED WS | APPROVED EAB |
| SHEET 15 OF 17 | |

PERIMETER FASTENERS:

1. TYPICAL INSTALLATION INTO SUBSTRATES
   A. 3000 PSI CONCRETE
   B. STEEL, 18 GA. MIN.
   C. HOT ROLLED STEEL, 1/8" MIN. THICKNESS
   D. SO. PINE, GRADE NO. 2 OR BETTER

2. FIRST ANCHOR IS 2" FROM EDGE OF VERTICAL. EACH ADDITIONAL FASTENER IS AT REQUIRED MIN. SPACING.

ANCHOR LENGTHS ARE SHOWN TO MEET MINIMUM EMBEDMENT.

DOOR PAIR DEPICTED, SINGLE DOORS QUALIFIED BY SAME.

FOR DOOR FRAMES WITHOUT SIDELITES, ANCHORING SHALL BE DUPLICATED ON BOTH JAMBS AS SHOWN (PAIRS AND/ OR SINGLES).

| DOOR FRAME JAMB ANCHORS<br>1/4-14 X 2-1/2" TEK 3 HEX OR FLAT HEAD SCREWS | |
|---|---|
| LOCATION | SPACING |
| FROM BOTTOM OF FRAME (2) TOTAL | 8-1/2", 12-1/2" |
| FROM CENTERLINE (2) TOTAL | 2" ABOVE CENTERLINE<br>2" BELOW CENTERLINE |
| FROM BOTTOM OF DOOR HEADER (2) TOTAL | 8-1/2", 12-1/2" |

NOTE:
DOOR FRAMES WITH AND WITHOUT TRANSOM SHALL BE ANCHORED AS SHOWN ON CHART ABOVE.

**HEAD AND SILL**
1/4" X 2-1/2" TEK 3 SCREW.
LOCATE FIRST ANCHOR 2" FROM EDGE OF MULLION AND ADDITIONAL ANCHORS @ 2" MIN. SPACING .

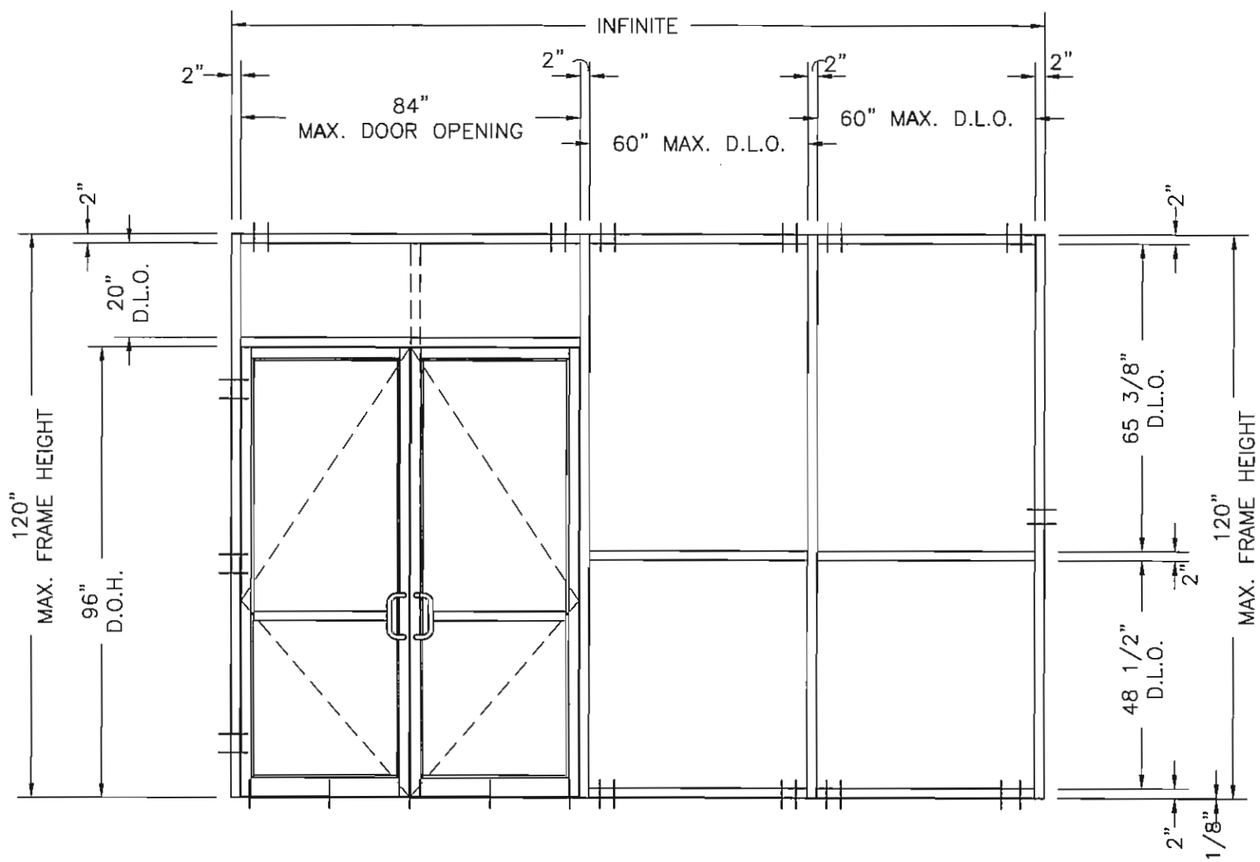


# LIGHT GAUGE MIN. 18 GA. STEEL SUBSTRATE ANCHOR LOCATIONS

**JAMB**
1/4" X 2-1/2" TEK 3 SCREW.
LOCATE (1) ANCHOR @ 1" ABOVE AND BELOW CENTERLINE

**NOTE:**
MULLION JAMB ANCHORS MAY BE OMITTED FOR HEIGHTS LESS THAN 9'-0"

| THRESHOLD ANCHORS<br>1/4" X 2-1/2" FHP TAPCON OR EQUAL - 1-3/4" MINIMUM EMBEDMENT, 2-1/2" MIN. EDGE DISTANCE | |
|---|---|
| SINGLE DOORS UP TO 48" (3 ANCHORS TOTAL) | (1) EACH 4" FROM EACH JAMB |
| | (1) EACH AT CENTER LINE OF DOOR OPENING |
| PAIRS DOORS UP TO 96" (5 ANCHORS TOTAL) | (1) EACH AT 4" FROM EACH JAMB |
| | (1) EACH AT CENTER LINE OF DOOR OPENING |
| | (1) EACH BETWEEN CENTER LINE AND JAMB ANCHORS |

ELIZABETH A. BROADWAY LICENSE No. 38558 STATE OF FLORIDA PROFESSIONAL ENGINEER

ELIZABETH A. BROADWAY
PROFESSIONAL ENGINEER
FLORIDA REGISTRATION NO. 38558
3/28/18


BROADWAY ENGINEERING, P.A.
CIVIL, MECHANICAL, STRUCTURAL AND BUILDING DESIGN
See Us At www.Broadway-Eng.Com
1335 W. Cass Street
Tampa, Florida 33606 813-251-9244
Fax 813-251-9330 Bus. Email: Info@Broadway-Eng.Com
Cadd. Email: DCart@Broadway-Eng.Com
BE-4862 Certificate of Authorization No. 4599


| REV | BY | DATE | DESCRIPTION |
|---|---|---|---|


Coral Architectural Products
3018 RICE MINE ROAD, TUSCALOOSA, AL 35406
PHONE: 800-772-7737 FAX: 800-255-7320


FLORIDA PRODUCT APPROVAL DRAWINGS FOR FL300

LIGHT GAUGE STEEL FASTENER LOCATIONS

| | |
|---|---|
| PROJECT NO. FL300 | |
| DRAWN DEG | DATE 3/22/18 |
| CHECKED WS | APPROVED EAB |
| SHEET 16 OF 17 | |

PERIMETER FASTENERS:

1. TYPICAL INSTALLATION INTO SUBSTRATES
   A. 3000 PSI CONCRETE
   B. STEEL, 18 GA. MIN.
   C. HOT ROLLED STEEL, 1/8" MIN. THICKNESS
   D. SO. PINE, GRADE NO. 2 OR BETTER

2. FIRST ANCHOR IS 2" FROM EDGE OF VERTICAL. EACH ADDITIONAL FASTENER IS AT REQUIRED MIN. SPACING.

ANCHOR LENGTHS ARE SHOWN TO MEET MINIMUM EMBEDMENT.

DOOR PAIR DEPICTED, SINGLE DOORS QUALIFIED BY SAME.

FOR DOOR FRAMES WITHOUT SIDELITES, ANCHORING SHALL BE DUPLICATED ON BOTH JAMBS AS SHOWN (PAIRS AND/ OR SINGLES).

| DOOR FRAME JAMB ANCHORS<br>1/4-14 X 2-1/2" TEK 3 HEX OR FLAT HEAD SCREWS<br>OR 1/4" X 2-1/2" BOLT | |
|---|---|
| LOCATION | SPACING |
| FROM BOTTOM OF FRAME (1) TOTAL | 8-1/2" |
| FROM CENTERLINE (1) TOTAL | AT CENTERLINE. |
| FROM BOTTOM OF DOOR HEADER (1) TOTAL | 8-1/2" |

NOTE:
DOOR FRAMES WITH AND WITHOUT TRANSOM SHALL BE ANCHORED AS SHOWN ON CHART ABOVE.

**HEAD AND SILL**
1/4" X 2" PAN HEAD OR TEK SCREW
OR
1/4" X 2" TYPE F BOLT OR STANDARD SAE BOLT AND TAP
OR
1/4" X 2" BOLT, NUT, AND WASHER
LOCATE ANCHORS 2" FROM EDGE OF MULLION.

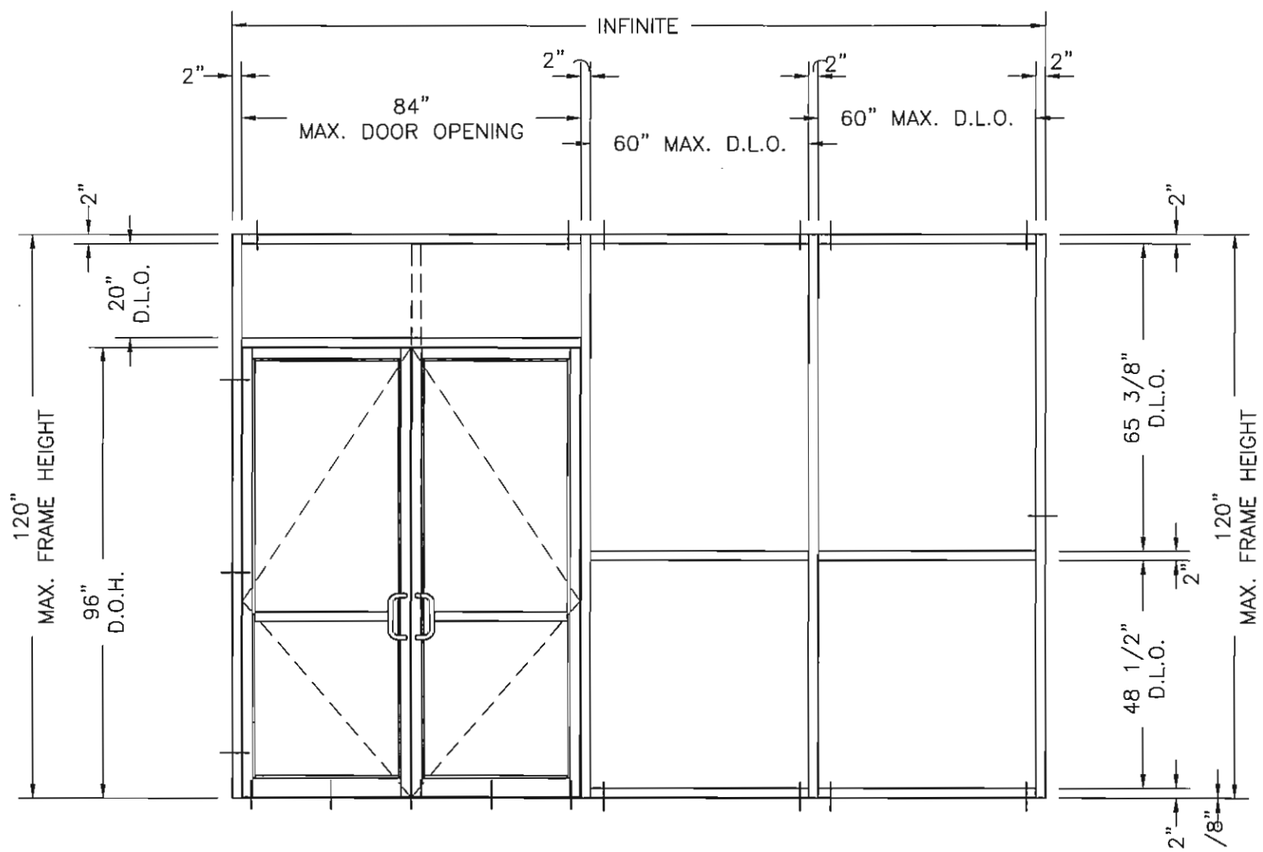


# HOT ROLLED STEEL SUBSTRATE ANCHOR LOCATIONS

**JAMB**
1/4" X 2-1/2" TEK 3 SCREW OR BOLT
LOCATE ANCHOR @ CENTERLINE

**NOTE:**
MULLION JAMB ANCHORS MAY BE OMITTED FOR HEIGHTS LESS THAN 9'-0"

| THRESHOLD ANCHORS<br>1/4" X 2-1/2" FHP TAPCON OR EQUAL - 1-3/4" MINIMUM EMBEDMENT, 2-1/2" MIN. EDGE DISTANCE | |
|---|---|
| SINGLE DOORS UP TO 48" (3 ANCHORS TOTAL) | (1) EACH 4" FROM EACH JAMB |
| | (1) EACH AT CENTER LINE OF DOOR OPENING |
| PAIRS DOORS UP TO 96" (5 ANCHORS TOTAL) | (1) EACH AT 4" FROM EACH JAMB |
| | (1) EACH AT CENTER LINE OF DOOR OPENING |
| | (1) EACH BETWEEN CENTER LINE AND JAMB ANCHORS |

ELIZABETH A. BROADWAY LICENSE No. 38558 STATE OF FLORIDA PROFESSIONAL ENGINEER

ELIZABETH A. BROADWAY 3/28/18
PROFESSIONAL ENGINEER
FLORIDA REGISTRATION NO. 38558


BROADWAY ENGINEERING, P.A.
CIVIL, MECHANICAL, STRUCTURAL AND BUILDING DESIGN
See Us At www.Broadway-Eng.Com
1335 W. Cass Street
Tampa, Florida 33606 813-251-9244
Fax 813-251-9330 Bus. Email: Info@Broadway-Eng.Com
Cadd. Email: DGarr@Broadway-Eng.Com
BE-4862 Certificate of Authorization No. 4599


| REV | BY | DATE | DESCRIPTION |
|---|---|---|---|


Coral Architectural Products
3010 RICE MINE ROAD, TUSCALOOSA, AL 35406
PHONE: 800-772-7737 FAX: 800-255-7320


FLORIDA PRODUCT APPROVAL DRAWINGS FOR FL300

HOT ROLLED STTEL FASTENER LOCATIONS

| | |
|---|---|
| PROJECT NO. FL300 | |
| DRAWN DEG | DATE 3/22/18 |
| CHECKED WS | APPROVED EAB |
| SHEET 17 OF 17 | |