GENERAL NOTES:

1. EXTRUDED BERTHA BAHAMA SHUTTER SHOWN ON THIS PRODUCT EVALUATION DOCUMENT (P.E.D.) HAS BEEN VERIFIED FOR COMPLIANCE IN ACCORDANCE WITH THE **2020 (7th EDITION)** OF THE FLORIDA BUILDING CODE.
THIS BAHAMA SHUTTER SHALL **NOT** BE INSTALLED AT HIGH VELOCITY HURRICANE ZONES (MIAMI DADE/BROWARD COUNTY).

DESIGN WIND LOADS SHALL BE DETERMINED AS PER SECTION **1609** OF THE ABOVE MENTIONED CODE, FOR A BASIC WIND SPEED REQUIRED BY THE JURISDICTION WHERE SHUTTER WILL BE INSTALLED. **USING ASCE 7-16** AND SHALL NOT EXCEED THE MAXIMUM (A.S.D.) DESIGN PRESSURE RATINGS INDICATED ON SHEETS 7, 8 & 9.
IN ORDER TO VERIFY THE ABOVE CONDITION, ULTIMATE DESIGN WIND LOADS DETERMINED PER **ASCE 7-16** SHALL BE FIRST REDUCED TO A.S.D. DESIGN WIND LOADS BY MULTIPLYING THEM BY 0.6 IN ORDER TO COMPARE THESE W/ MAX. (A.S.D) DESIGN PRESSURE RATINGS INDICATED ON SHEETS 7, 8 & 9.

IN ORDER TO VERIFY THAT ANCHORS ON THIS P.E.D., AS TESTED, WERE NOT OVERSTRESSED, A 33% INCREASE IN ALLOWABLE STRESS FOR WIND LOADS WAS USED IN THEIR ANALYSIS. HOWEVER, FOR LAG SCREWS INTO WOOD, A 1.60 WIND LOAD DURATION FACTOR WAS USED TO CALCULATE SCREWS SPACINGS.
EXTRUDED BERTHA BAHAMA SHUTTER'S ADEQUACY FOR IMPACT AND FATIGUE RESISTANCE HAS BEEN VERIFIED IN ACCORDANCE WITH SECTION 1609.1.2 OF THE ABOVE MENTIONED CODE AS PER ATL REPORTS #0923.01-97 AND #0309.01-04 AS PER TAS-201, TAS-202 AND TAS-203 PROTOCOLS.

2. ALL ALUMINUM EXTRUSIONS SHALL BE ALUMINUM ASSOCIATION 6063-T6 ALLOY AND TEMPER, WITH Fy= 25.0 ksi MINIMUM (UNLESS OTHERWISE NOTED). ALL ALUMINUM EXTRUSIONS IN CONTACT WITH DISSIMILAR MATERIALS SHALL COMPLY WITH SECTION III-6 OF THE 2015 ALUMINUM DESIGN MANUAL.

3. ALL SCREWS TO BE STAINLESS STEEL 304 OR 316 AISI SERIES OR CORROSION RESISTANT COATED CARBON STEEL AS PER DIN 50018 WITH 50 ksi YIELD POINT AND 90 ksi TENSILE STRENGTH AND SHALL COMPLY W/ FLORIDA BUILDING CODE CODE SECTION 2411.3.3.4.

4. BOLTS TO BE ASTM A-307 GALVANIZED STEEL, OR AISI 304 SERIES STAINLESS STEEL WITH 35 ksi MINIMUM YIELD STRENGTH.

5. ALL ALUMINUM POP RIVETS TO BE 5052 ALUMINUM ALLOY WITH ALUMINUM MANDREL.

6. ANCHORS TO WALL SHALL BE AS FOLLOWS (UNLESS OTHERWISE NOTED):

(A) TO EXISTING POURED CONCRETE: (Min. f'c=3000 p.s.i)
- 1/4"ø TAPCON ANCHORS AS MANUFACTURED BY I.T.W. BUILDEX.
- 1/4"ø x 7/8" CALK-IN ANCHORS AS MANUFACTURED BY DEWALT, INC.

NOTES:

A.1) MINIMUM EMBEDMENT OF TAPCON ANCHORS INTO POURED CONCRETE IS 1 1/2".

A.2) CALK-IN ANCHORS SHALL BE ENTIRELY EMBEDDED INTO THE POURED CONCRETE. NO EMBEDMENT INTO STUCCO SHALL BE PERMITTED.
1/4" ø-20 SCREWS USED SHALL BE 1 1/2" LONG MINIMUM SHOULD STUCCO EXIST AND 1" MINIMUM FOR WALLS WITH NO STUCCO.

A.3) IN CASE THAT PRECAST STONE, PRECAST CONCRETE PANELS, OR PAVERS BE FOUND ON THE EXISTING WALL OR FLOOR, ANCHORS SHALL BE LONG ENOUGH TO REACH THE MAIN STRUCTURE BEHIND SUCH PANELS. ANCHORAGE SHALL BE AS INDICATED ON NOTES A.1) & A.2) ABOVE.

(B) TO EXISTING CONCRETE BLOCK WALL:
- 1/4" ø TAPCON ANCHORS AS MANUFACTURED BY I.T.W. BUILDEX.
- 1/4" ø x 7/8" CALK-IN ANCHORS AS MANUFACTURED BY DEWALT, INC.

NOTES:

B.1) MINIMUM EMBEDMENT OF TAPCON ANCHORS INTO THE CONCRETE BLOCK UNIT SHALL BE 1 1/4".

B.2) CALK-IN ANCHORS SHALL BE ENTIRELY EMBEDDED INTO THE CONCRETE BLOCK UNIT. NO EMBEDMENT INTO STUCCO SHALL BE PERMITTED. 1/4" ø-20 SCREWS USED SHALL BE 1 1/2" LONG MINIMUM SHOULD STUCCO EXIST AND 1" MINIMUM FOR WALLS WITH NO STUCCO.

B.3) IN CASE THAT PRECAST STONE OR PRECAST CONCRETE PANELS BE FOUND ON THE EXISTING WALL, ANCHORS SHALL BE LONG ENOUGH TO REACH THE MAIN STRUCTURE BEHIND SUCH PANELS. ANCHORAGE SHALL BE AS INDICATED ON NOTES B.1) & B.2) ABOVE.

(C) ANCHORS SHALL BE INSTALLED FOLLOWING ALL OF THE RECOMMENDATIONS AND SPECIFICATIONS OF THE ANCHOR'S MANUFACTURER.

7. EACH SHUTTER SHALL HAVE A LEGIBLE AND READILY VISIBLE MARKING INSTRUCTING OWNER OR TENANT TO SECURE SHUTTER WITH SIDE & SILL BRACKETS DURING PERIODS OF HURRICANE WARNINGS.

8. IT SHALL BE THE RESPONSIBILITY OF THE CONTRACTOR TO VERIFY THE SOUNDNESS OF THE STRUCTURE WHERE SHUTTER IS TO BE ATTACHED TO INSURE PROPER ANCHORAGE. CONTRACTOR TO SEAL/CAULK ALL SHUTTER COMPONENT EDGES WHICH REMAIN IN CONTINUOUS CONTACT WITH THE BUILDING TO PREVENT WIND/RAIN INTRUSION. CAULK AND SEAL SHUTTER TRACKS ALL AROUND FULL LENGTH.

9. BERTHA BAHAMA SHUTTER'S INSTALLATION SHALL COMPLY WITH SPECS INDICATED IN THIS DRAWING PLUS ANY BUILDING AND ZONING REGULATIONS PROVIDED BY THE JURISDICTION WHERE PERMIT IS APPLIED TO.

10. SHUTTER MANUFACTURER'S LABEL SHALL BE LOCATED ON A READILY VISIBLE LOCATION AT SURFACE OF THE BAHAMA FRAME (E) OR (G) IN ACCORDANCE WITH SECTION 1709.9.3 OF FLORIDA BUILDING CODE. ONE LABEL SHALL BE PLACED FOR EVERY OPENING. LABELING TO COMPLY WITH SECTION 1709.9.2 OF THE FLORIDA BUILDING CODE.

11. (a) THIS PRODUCT EVALUATION DOCUMENT (P.E.D.) PREPARED BY THIS ENGINEER IS GENERIC AND DOES NOT PROVIDE INFORMATION FOR A SITE SPECIFIC PROJECT; i. e. WHERE THE SITE CONDITIONS DEVIATE FROM THE P.E.D.

(b) CONTRACTOR TO BE RESPONSIBLE FOR THE SELECTION, PURCHASE AND INSTALLATION INCLUDING LIFE SAFETY OF THIS PRODUCT, BASED ON THIS PRODUCT EVALUATION DOCUMENT, PROVIDED HE/SHE DOES NOT DEVIATE FROM THE CONDITIONS DETAILED ON THIS DOCUMENT. CONSTRUCTION SAFETY AT SITE IS THE CONTRACTOR'S RESPONSIBILITY.

(c) THIS PRODUCT EVALUATION DOCUMENT WILL BE CONSIDERED INVALID IF ALTERED BY ANY MEANS.

(d) SITE SPECIFIC PROJECTS SHALL BE PREPARED BY A FLORIDA REGISTERED ENGINEER OR ARCHITECT WHICH WILL BECOME THE ENGINEER OF RECORD (E.O.R.) FOR THE PROJECT AND WHO WILL BE RESPONSIBLE FOR THE PROPER USE OF THE P.E.D. ENGINEER OF RECORD, ACTING AS A DELEGATED ENGINEER TO THE P.E.D. ENGINEER, SHALL SUBMIT TO THIS LATTER THE SITE SPECIFIC DRAWINGS FOR REVIEW.

(e) ORIGINAL P.E.D. SHALL BEAR THE DATE AND ORIGINAL SEAL AND SIGNATURE OF THE PROFESSIONAL ENGINEER OF RECORD THAT PREPARED IT.

THIS DRAWING SHALL ONLY BE USED TO OBTAIN PERMITS IN THE STATE OF FLORIDA

WALTER A. TILLIT JR. LICENSE No. 44167 STATE OF FLORIDA PROFESSIONAL ENGINEER

7/2/2020

FLORIDA BUILDING CODE (Non High Velocity Hurricane Zone)

COMBINATION DRAWING:
ASSA / EXTRUDED BERTHA BAHAMA SHUTTER (SHEETS 1 THRU 9 OF 33)
ASSA / BERTHA COLONIAL SHUTTER (SHEETS 10 THRU 33 OF 33)

©2020 TILTECO, INC.

TILTECO INC.
TILLIT TESTING & ENGINEERING COMPANY
6355 N.W. 36th. St., Ste. 305, VIRGINIA GARDENS, FLORIDA 33166
Phone : (305)871-1530 . Fax : (305)871-1531
e-mail: tilteco@aol.com
CA-0006719
WALTER A. TILLIT Jr., P.E.
FLORIDA Lic. # 44167

ASSA / EXTRUDED BERTHA BAHAMA SHUTTER

AMERICAN SHUTTER SYSTEMS ASSOC., INC.
4268 WEST ROADS DRIVE
WEST PALM BEACH, FL. 33407
PHONE: (800)432-2204
FAX: (561)209-8380

REV. No	DESCRIPTION	DATE	REV. No	DESCRIPTION	DATE
1	OLD 17-114	7/2/2020	3	-	-
2			4	-	-

M.P.
DRAWN BY:

7/2/2020
DATE:

20-167
DRAWING No

SHEET 1 OF 33

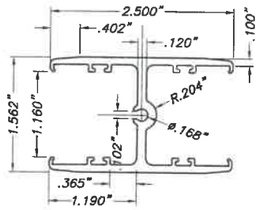

(A1) REGULAR INTERIOR MULLION
6005-T5 Alum. ALLOY
SCALE: 1/2" = 1"

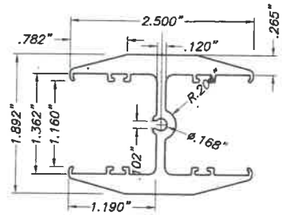

(A2) HEAVY INTERIOR MULLION
6005-T5 Alum. ALLOY
SCALE: 1/2" = 1"

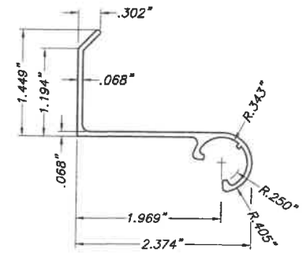

(B) FEMALE HINGE
SCALE: 1/2" = 1"

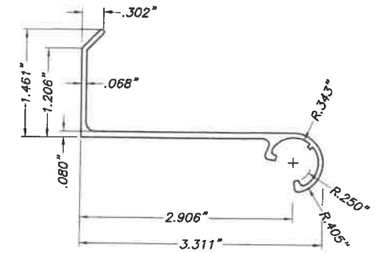

(C) 1" B. O. FEMALE HINGE
SCALE: 1/2" = 1"

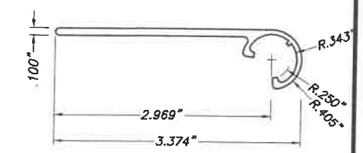

(D) FLAT FEMALE HINGE
SCALE: 1/2" = 1"

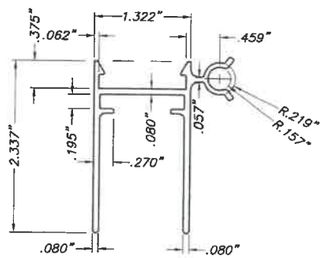

(E) BAHAMA MALE TOP FRAME
SCALE: 1/2" = 1"

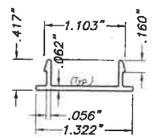

(F) SNAP CAP
SCALE: 1/2" = 1"

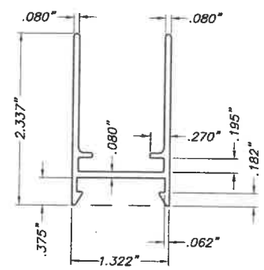

(G) BAHAMA FRAME
SCALE: 1/2" = 1"

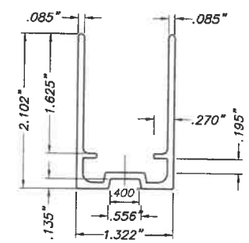

(G1) ALTERNATE BAHAMA FRAME
SCALE: 1/2" = 1"

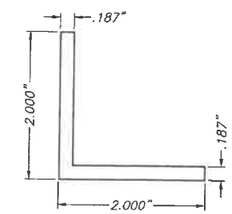

(H) CORNER KEY
1" LONG
SCALE: 1/2" = 1"

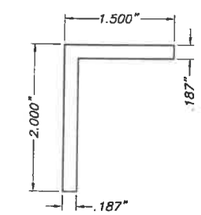

(N) WALL MOUNT Alum. BRACKET
7" LONG
SCALE: 1/2" = 1"

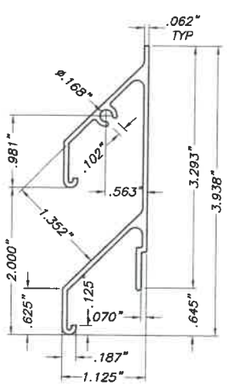

(I) HALF SHUTTER BLADE
SCALE: 1/2" = 1"

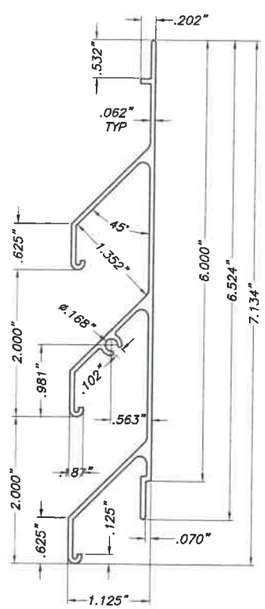

(J) SHUTTER BLADE
SCALE: 1/2" = 1"

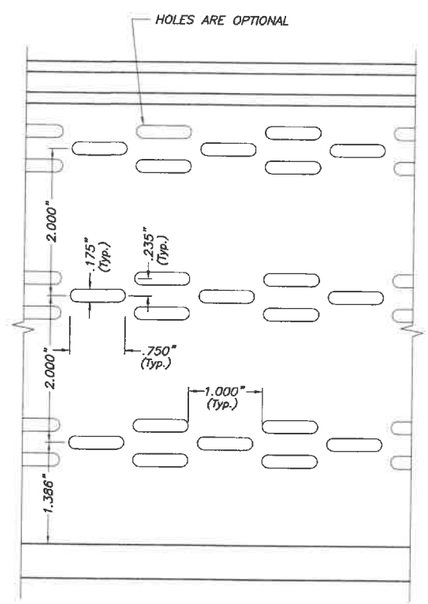

SHUTTER BLADE ELEVATION
SCALE: 1/2" = 1"

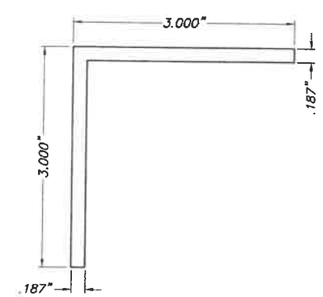

(O) BUILD-OUT Alum. BRACKET
7" LONG
SCALE: 1/2" = 1"

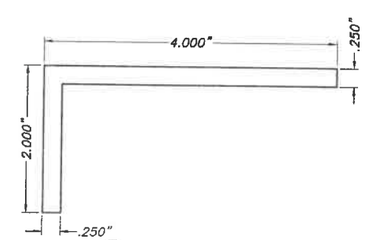

(P) BUILD-OUT SIDE BRACKET
7" LONG
SCALE: 1/2" = 1"

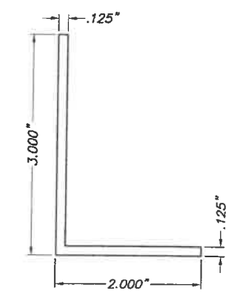

(Q) SILL ANGLE
SCALE: 1/2" = 1"

7/9/2020

WALTER A. TILLIT JR.
LICENSE
No. 44167
STATE OF FLORIDA
PROFESSIONAL ENGINEER

COMPONENTS

FLORIDA BUILDING CODE (Non High Velocity Hurricane Zone)

COMBINATION DRAWING:
ASSA / EXTRUDED BERTHA BAHAMA SHUTTER (SHEETS 1 THRU 9 OF 33)
ASSA / BERTHA COLONIAL SHUTTER (SHEETS 10 THRU 33 OF 33)

©2020 TILTECO, INC.

TILTECO INC.
TILLIT TESTING & ENGINEERING COMPANY
4235 N.W. 36th. St., Ste. 305, VIRGINIA GARDENS, FLORIDA 33166
Phone : (305)871-1530 . Fax : (305)871-1531
e-mail: tilteco@aol.com
CA-0006719
WALTER A. TILLIT Jr., P.E.
FLORIDA Lic. # 44167

ASSA / EXTRUDED BERTHA BAHAMA SHUTTER

AMERICAN SHUTTER SYSTEMS ASSOC., INC.
4268 WEST ROADS DRIVE
WEST PALM BEACH, FL. 33407
PHONE: (800)432-2204
FAX: (561)209-8380

M.P.
DRAWN BY:

7/2/2020
DATE:

20-167
DRAWING No

SHEET 2 OF 33

REV. No	DESCRIPTION	DATE	REV. No	DESCRIPTION	DATE
1	OLD 17-114	7/2/2020	3	-	-
2			4	-	-

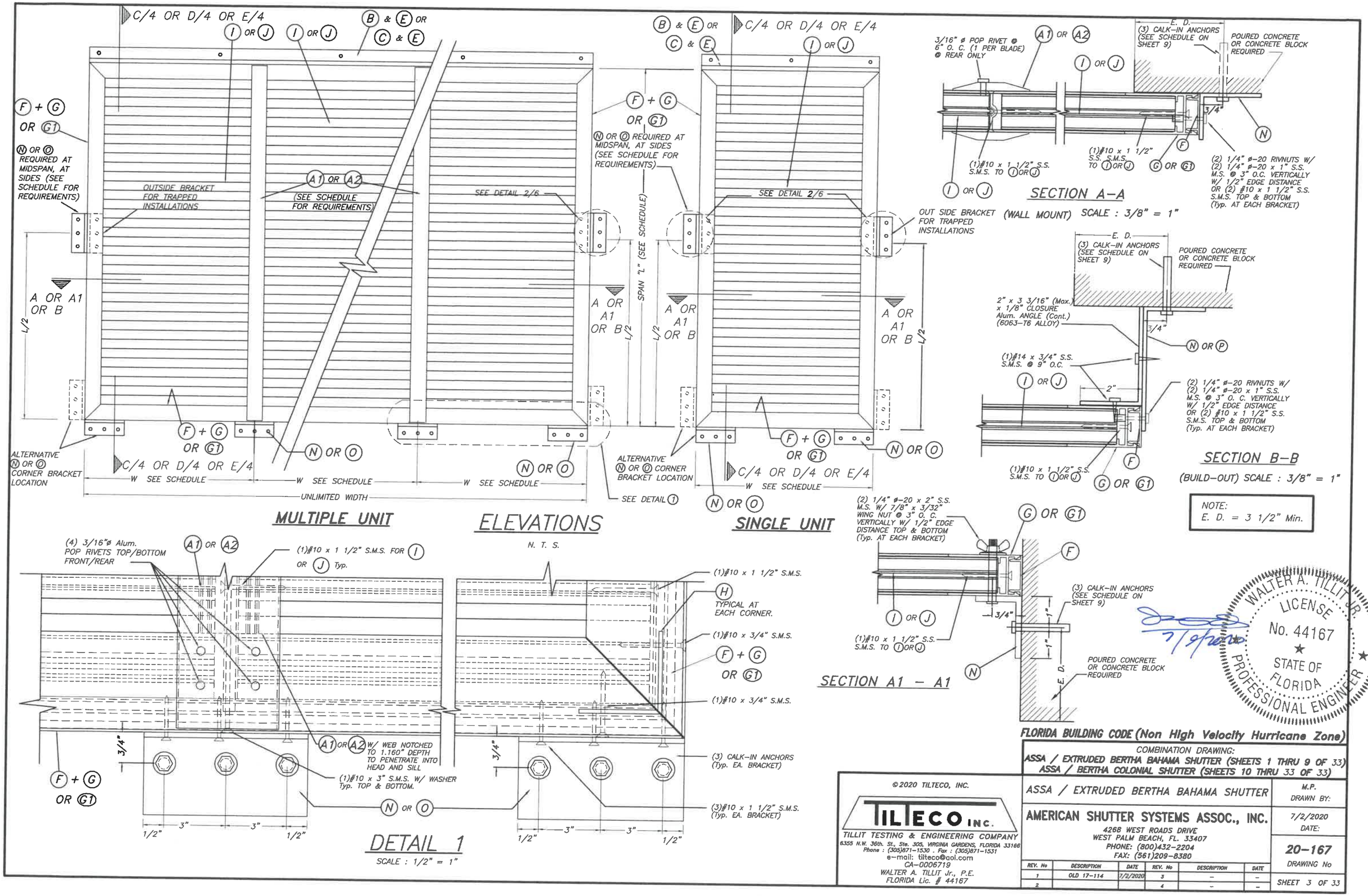

FLORIDA BUILDING CODE (Non High Velocity Hurricane Zone)

COMBINATION DRAWING:
ASSA / EXTRUDED BERTHA BAHAMA SHUTTER (SHEETS 1 THRU 9 OF 33)
ASSA / BERTHA COLONIAL SHUTTER (SHEETS 10 THRU 33 OF 33)

©2020 TILTECO, INC.

TILTECO INC.
TILLIT TESTING & ENGINEERING COMPANY
6355 N.W. 36th. St., Ste. 305, VIRGINIA GARDENS, FLORIDA 33166
Phone : (305)871-1530 . Fax : (305)871-1531
e-mail: tilteco@aol.com
CA-0006719
WALTER A. TILLIT Jr., P.E.
FLORIDA Lic. # 44167

ASSA / EXTRUDED BERTHA BAHAMA SHUTTER

AMERICAN SHUTTER SYSTEMS ASSOC., INC.
4268 WEST ROADS DRIVE
WEST PALM BEACH, FL. 33407
PHONE: (800)432-2204
FAX: (561)209-8380

M.P.
DRAWN BY:

7/2/2020
DATE:

20-167
DRAWING No

SHEET 3 OF 33

REV. No	DESCRIPTION	DATE	REV. No	DESCRIPTION	DATE
1	OLD 17-114	7/2/2020	3	–	–
2			4	–	–

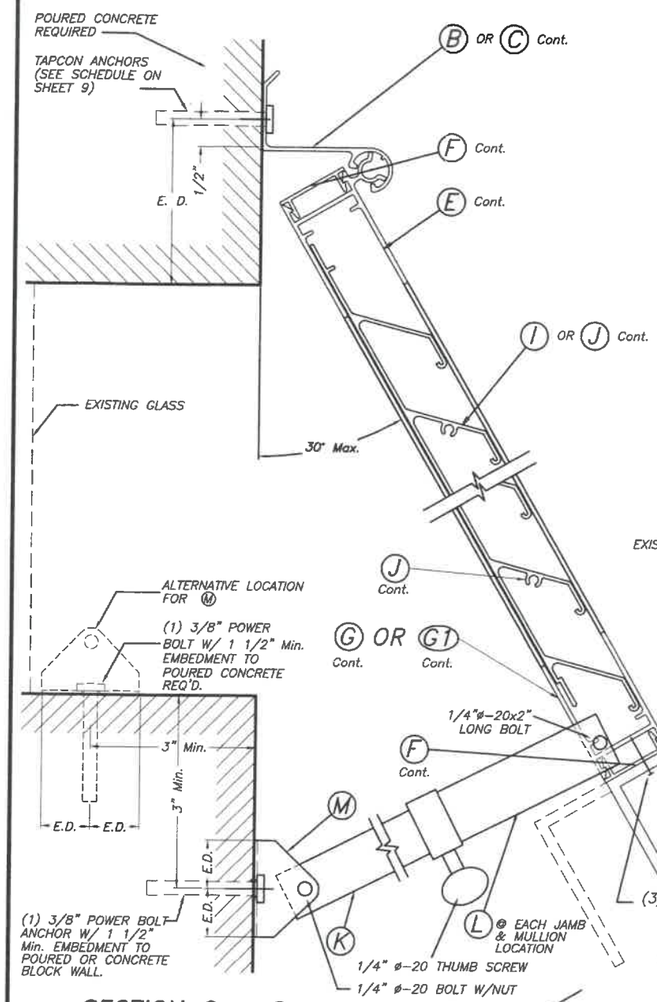

SECTION C – C (WALL MOUNT)

NON HURRICANE POSITION (74 m.p.h. WIND SPEED)

SCALE: 3/8" = 1"

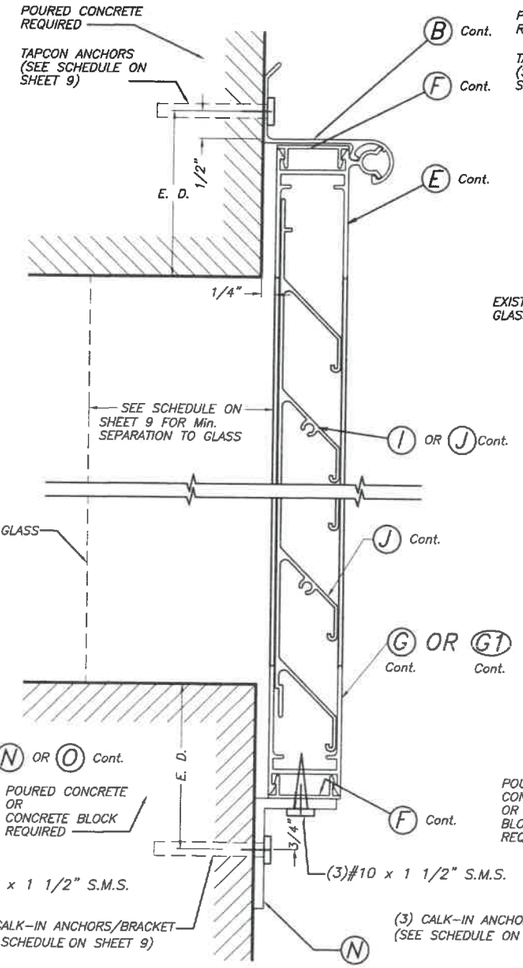

SECTION C – C (WALL MOUNT)

HURRICANE POSITION

SCALE: 3/8" = 1"

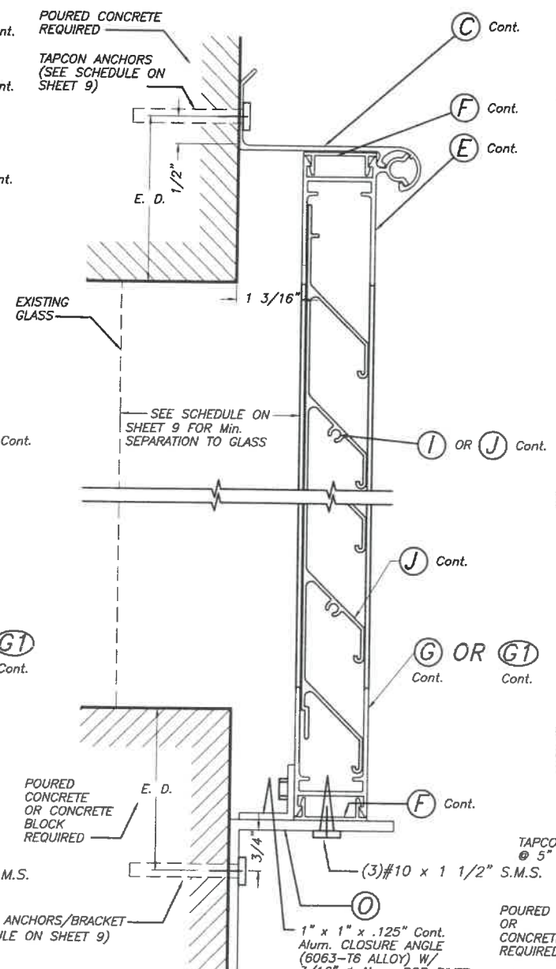

SECTION D – D (BUILD-OUT)

HURRICANE POSITION

SCALE: 3/8" = 1"

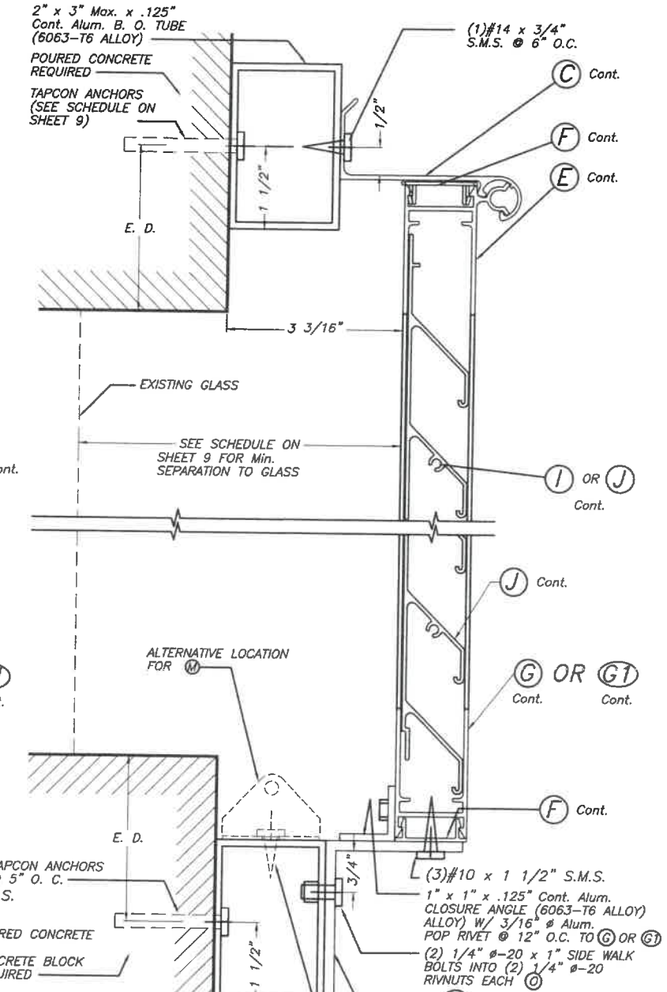

SECTION E – E (BUILD-OUT)

HURRICANE POSITION

SCALE: 3/8" = 1"

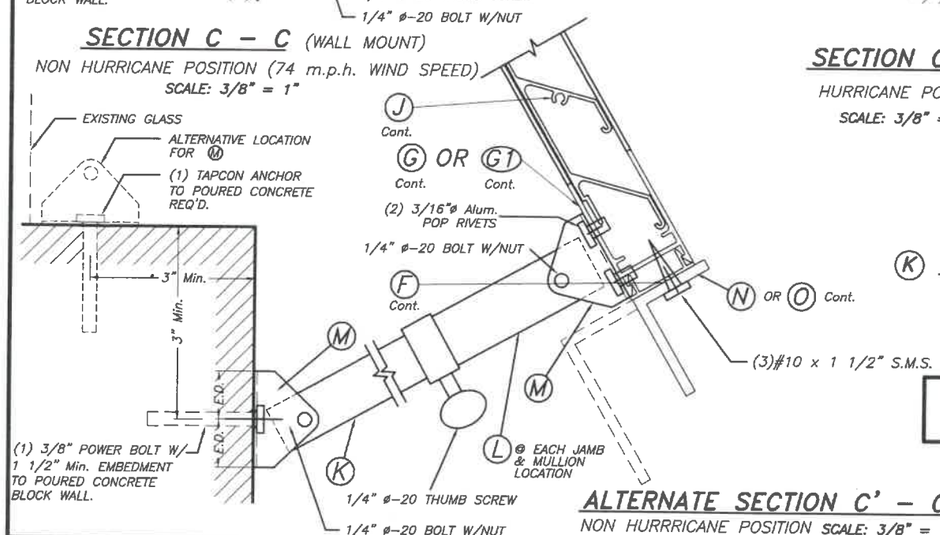

ALTERNATE SECTION C' – C' (WALL MOUNT)

NON HURRRICANE POSITION SCALE: 3/8" = 1"

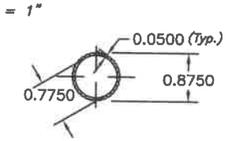

K .875" SERRATED TUBE

INSIDE ARM
6063-T6 ALLOY
SCALE : 3/8" = 1"

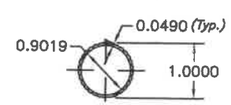

L 1" SERRATED TUBE

OUTSIDE ARM
6063-T6 ALLOY
SCALE : 3/8" = 1"

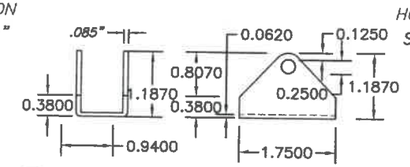

M CAMEL BACK HINGE

NOTE:
E. D. = 3 1/2" Min.

FLORIDA BUILDING CODE (Non High Velocity Hurricane Zone)

COMBINATION DRAWING:
ASSA / EXTRUDED BERTHA BAHAMA SHUTTER (SHEETS 1 THRU 9 OF 33)
ASSA / BERTHA COLONIAL SHUTTER (SHEETS 10 THRU 33 OF 33)

©2020 TILTECO, INC.

TILTECO INC.
TILLIT TESTING & ENGINEERING COMPANY
6355 N.W. 36th St., Ste. 305, VIRGINIA GARDENS, FLORIDA 33166
Phone : (305)871-1530 . Fax : (305)871-1531
e-mail: tilteco@aol.com
CA-0006719
WALTER A. TILLIT Jr., P.E.
FLORIDA Lic. # 44167

WALTER A. TILLIT JR. LICENSE No. 44167 STATE OF FLORIDA PROFESSIONAL ENGINEER

7/8/2020

ASSA / EXTRUDED BERTHA BAHAMA SHUTTER

AMERICAN SHUTTER SYSTEMS ASSOC., INC.
4268 WEST ROADS DRIVE
WEST PALM BEACH, FL. 33407
PHONE: (800)432-2204
FAX: (561)209-8380

M.P.
DRAWN BY:

7/2/2020
DATE:

20-167
DRAWING No

SHEET 4 OF 33

REV. No	DESCRIPTION	DATE	REV. No	DESCRIPTION	DATE
1	OLD 17-114	7/2/2020	3	–	–
2			4	–	–

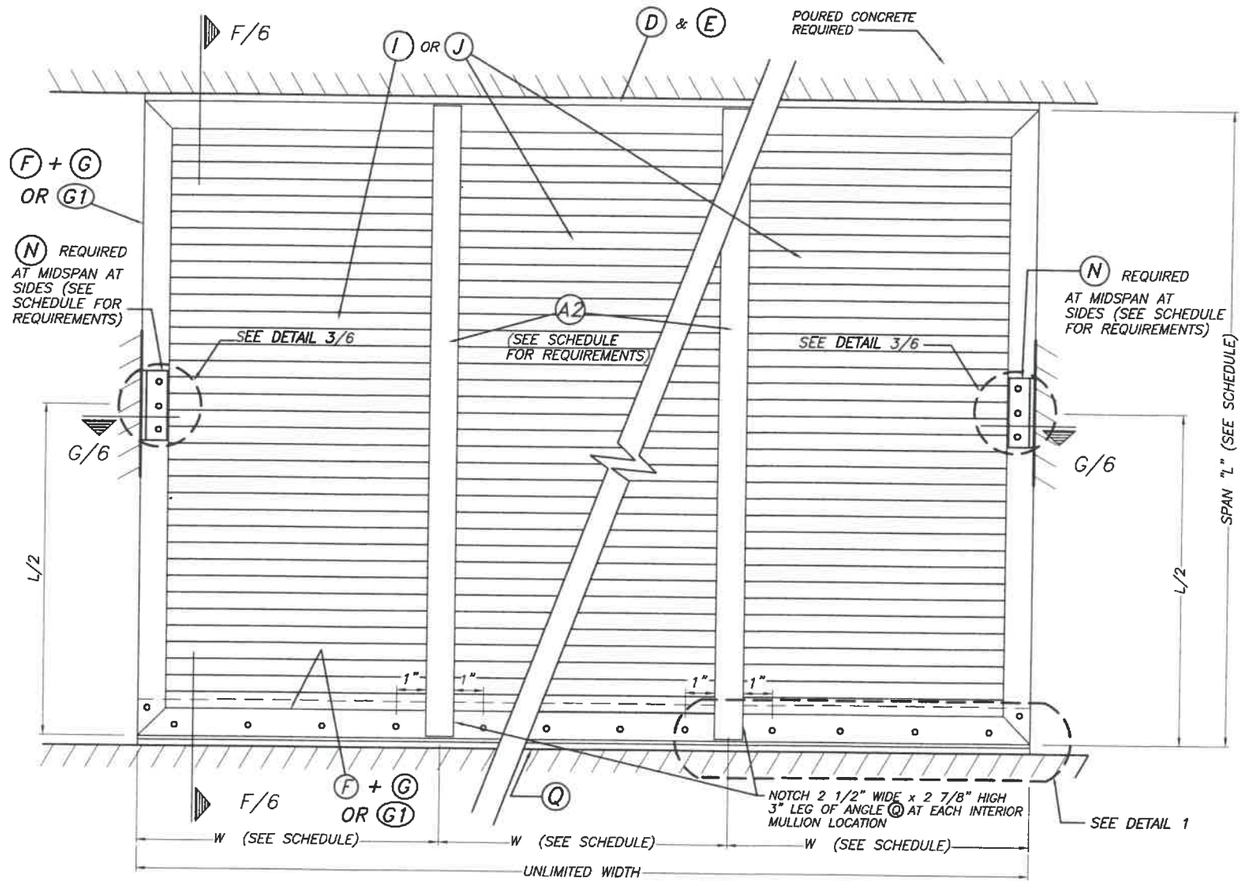

MULTIPLE UNIT

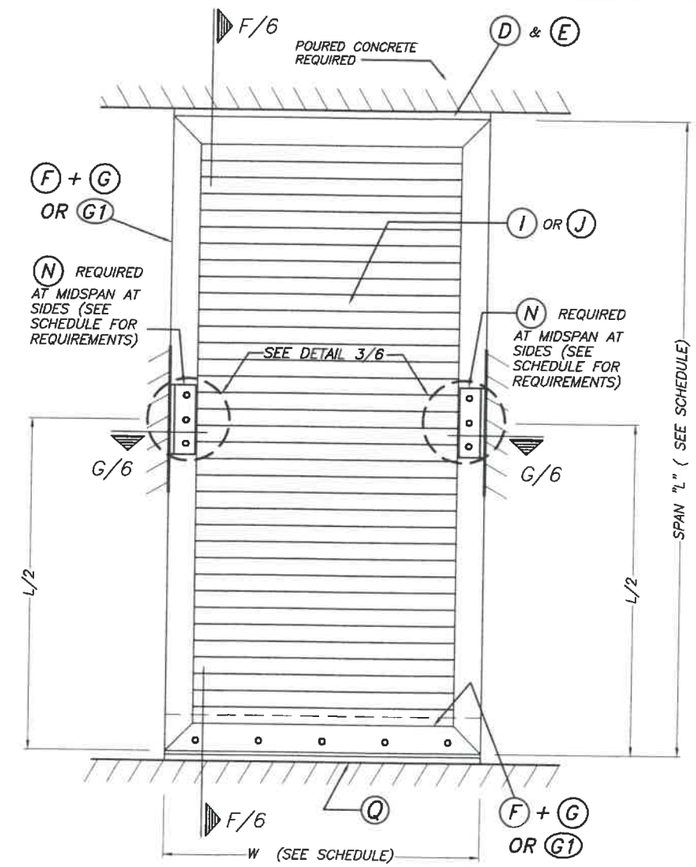

SINGLE UNIT

ELEVATIONS

N. T. S.

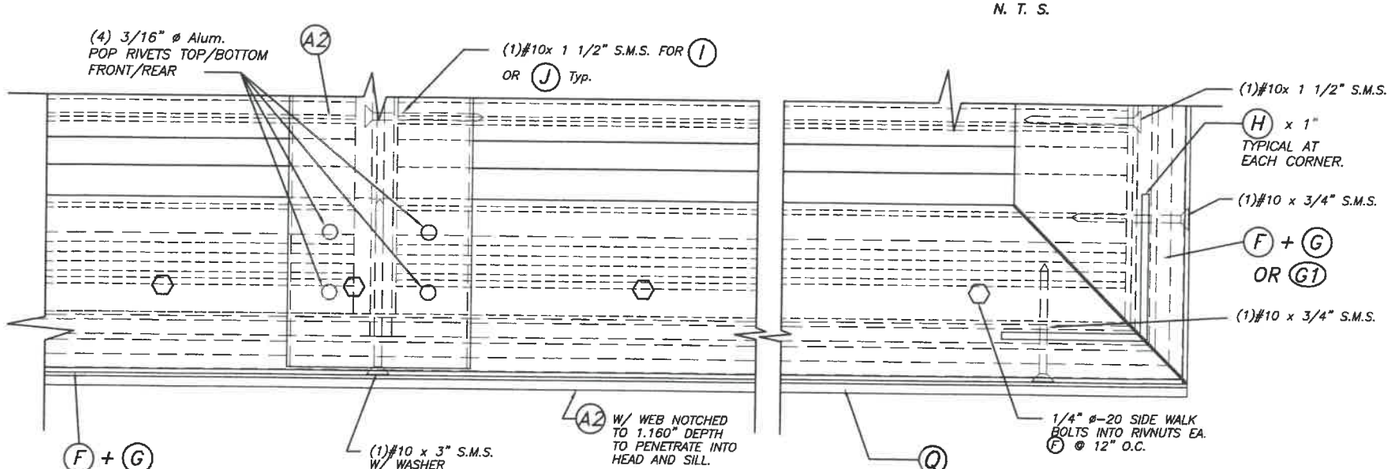

DETAIL 1

SCALE : 1/2" = 1"

WALTER A. TILLIT JR. LICENSE No. 44167 STATE OF FLORIDA PROFESSIONAL ENGINEER

7/2/2020

FLORIDA BUILDING CODE (Non High Velocity Hurricane Zone)

COMBINATION DRAWING:
ASSA / EXTRUDED BERTHA BAHAMA SHUTTER (SHEETS 1 THRU 9 OF 33)
ASSA / BERTHA COLONIAL SHUTTER (SHEETS 10 THRU 33 OF 33)

© 2020 TILTECO, INC.

TILTECO INC.
TILLIT TESTING & ENGINEERING COMPANY
6355 N.W. 36th. St., Ste. 305, VIRGINIA GARDENS, FLORIDA 33166
Phone : (305)871-1530 . Fax : (305)871-1531
e-mail: tilteco@aol.com
CA-0006719
WALTER A. TILLIT Jr., P.E.
FLORIDA Lic. # 44167

ASSA / EXTRUDED BERTHA BAHAMA SHUTTER

AMERICAN SHUTTER SYSTEMS ASSOC., INC.
4268 WEST ROADS DRIVE
WEST PALM BEACH, FL. 33407
PHONE: (800)432-2204
FAX: (561)209-8380

M.P.
DRAWN BY:

7/2/2020
DATE:

20-167
DRAWING No

REV. No	DESCRIPTION	DATE	REV. No	DESCRIPTION	DATE
1	OLD 17-114	7/2/2020	3	--	--
2			4	--	--

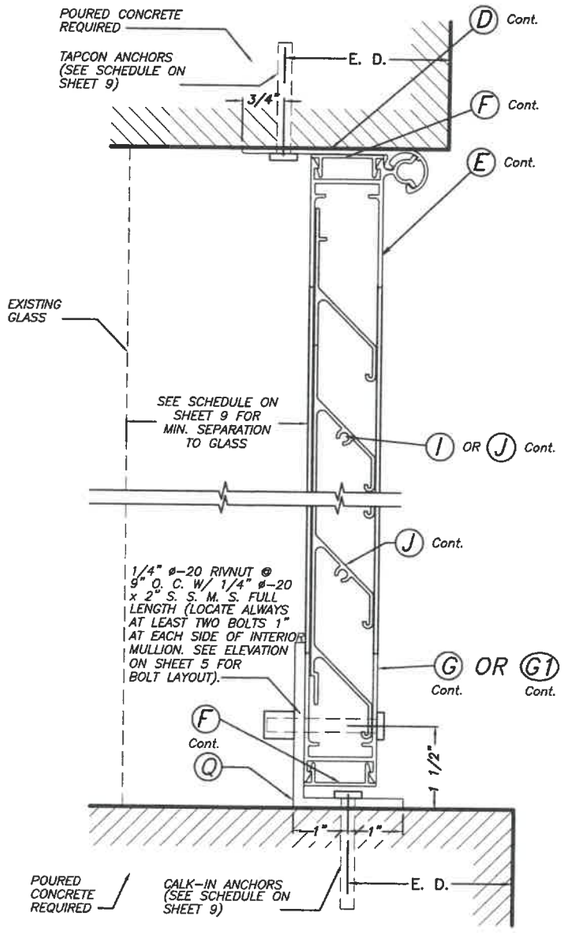

SECTION F – F

(TRAPPED MOUNT)

HURRICANE POSITION

SCALE: 3/8" = 1"

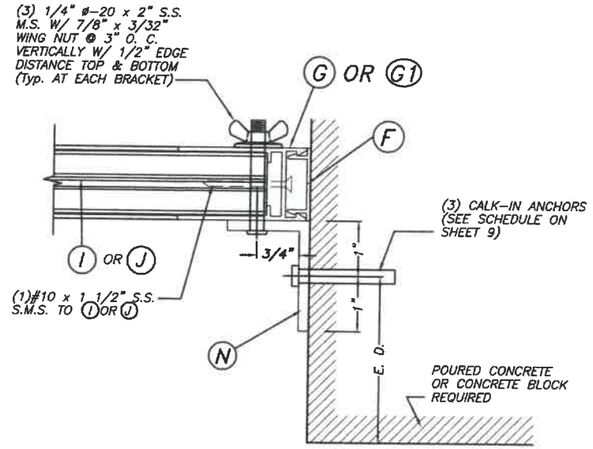

SECTION G – G

(TRAPPED MOUNT)

HURRICANE POSITION

SCALE: 3/8" = 1"

NOTE:
E. D. = 3 1/2" Min.

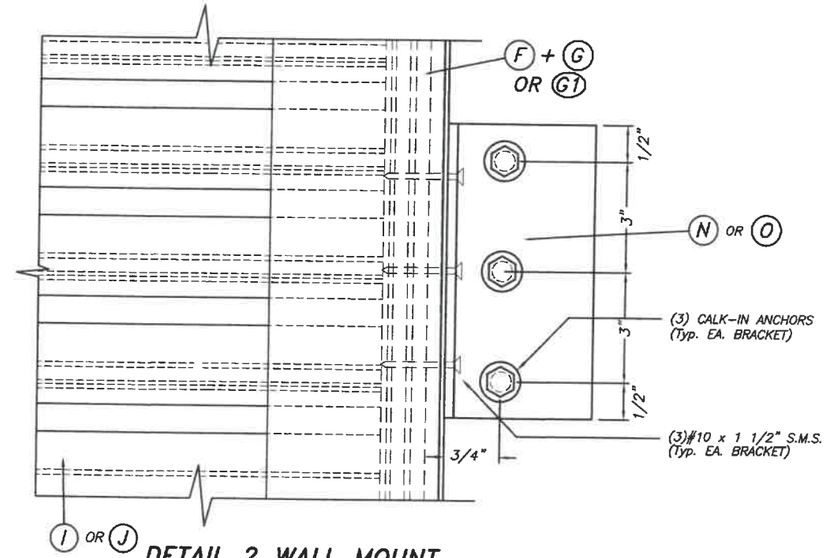

DETAIL 2 WALL MOUNT.

SCALE : 1/2" = 1"

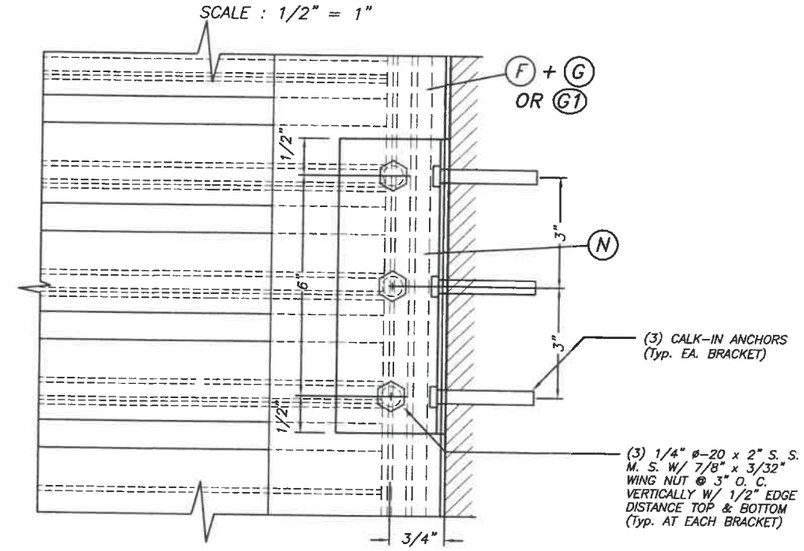

DETAIL 3 TRAPPED

SCALE : 1/2" = 1"

WALTER A. TILLIT JR. LICENSE No. 44167 STATE OF FLORIDA PROFESSIONAL ENGINEER

7/2/2020

© 2020 TILTECO, INC.

TILTECO INC.
TILLIT TESTING & ENGINEERING COMPANY
6355 N.W. 36th. St., Ste. 305, VIRGINIA GARDENS, FLORIDA 33166
Phone : (305)871-1530 . Fax : (305)871-1531
e-mail: tilteco@aol.com
CA-0006719
WALTER A. TILLIT Jr., P.E.
FLORIDA Lic. # 44167

FLORIDA BUILDING CODE (Non High Velocity Hurricane Zone)

COMBINATION DRAWING:
ASSA / EXTRUDED BERTHA BAHAMA SHUTTER (SHEETS 1 THRU 9 OF 33)
ASSA / BERTHA COLONIAL SHUTTER (SHEETS 10 THRU 33 OF 33)

ASSA / EXTRUDED BERTHA BAHAMA SHUTTER

M.P.
DRAWN BY:

AMERICAN SHUTTER SYSTEMS ASSOC., INC.
4268 WEST ROADS DRIVE
WEST PALM BEACH, FL. 33407
PHONE: (800)432-2204
FAX: (561)209-8380

7/2/2020
DATE:

20-167
DRAWING No

REV. No	DESCRIPTION	DATE	REV. No	DESCRIPTION	DATE
1	OLD 17-114	7/2/2020	3	–	–
2			4	–	–

SHEET 6 OF 33

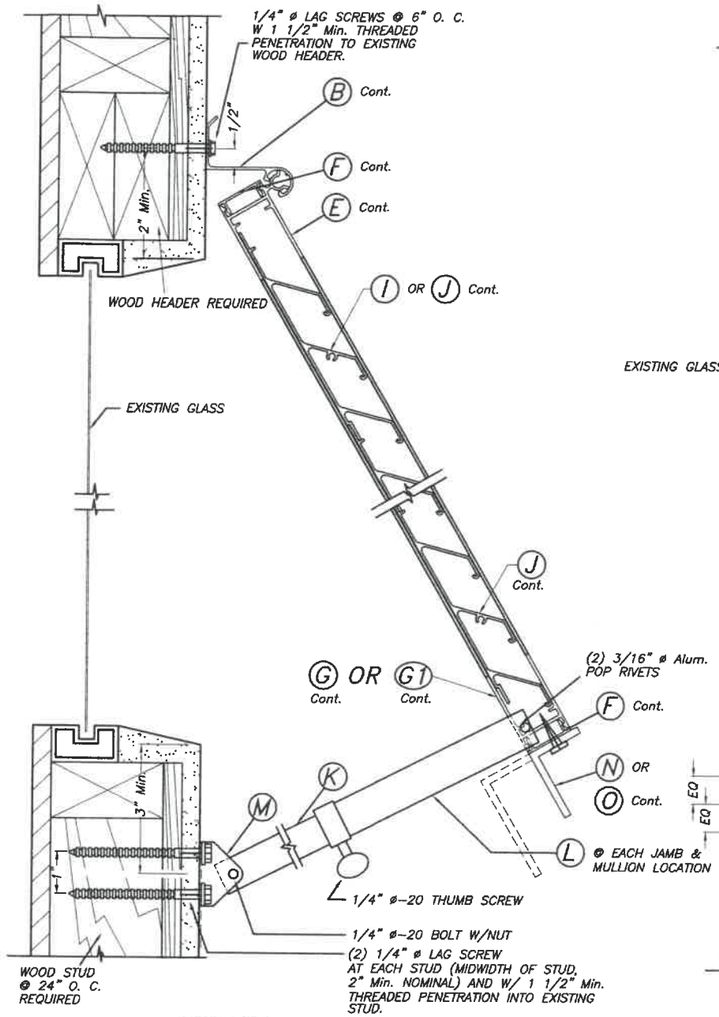

NON HURRICANE POSITION DETAIL: (74 m.p.h. OR LESS WIND SPEED)
SCALE: 3/8" = 1"

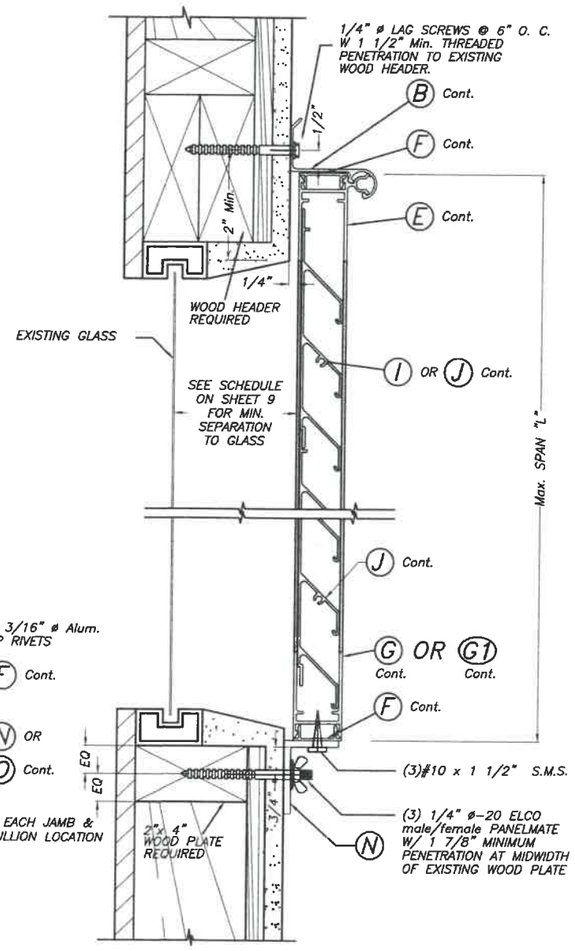

ALTERNATIVE 1

HURRICANE POSITION
SCALE: 3/8" = 1"

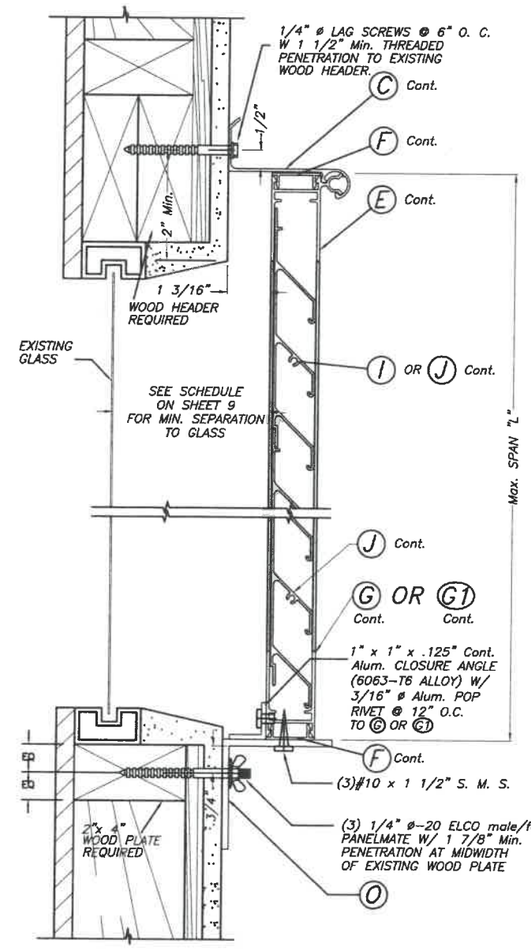

ALTERNATIVE 2

HURRICANE POSITION
SCALE: 3/8" = 1"

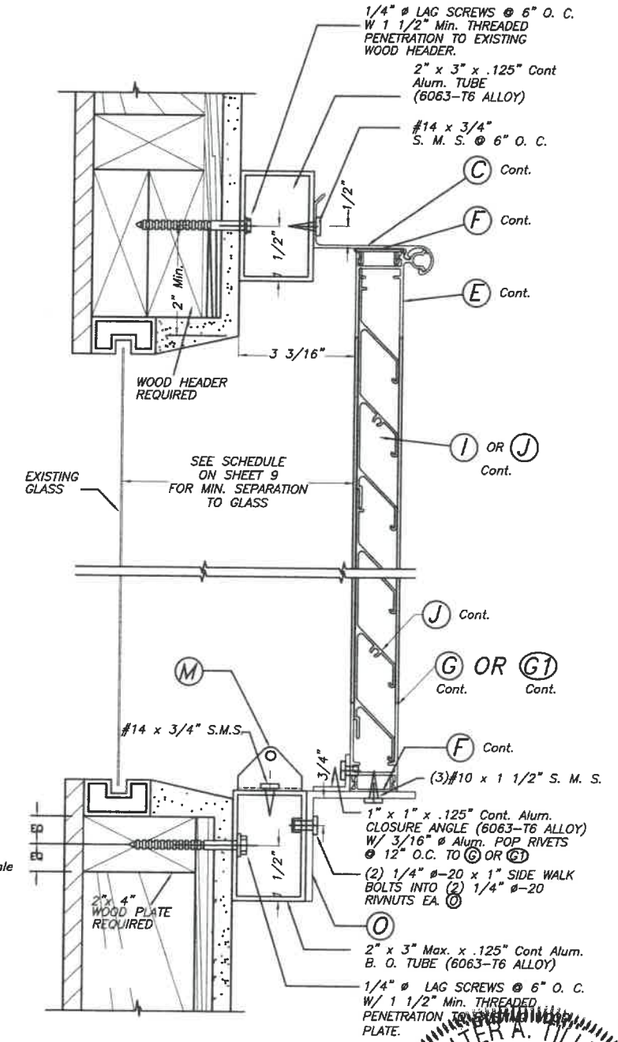

ALTERNATIVE 3

HURRICANE POSITION
SCALE: 3/8" = 1"

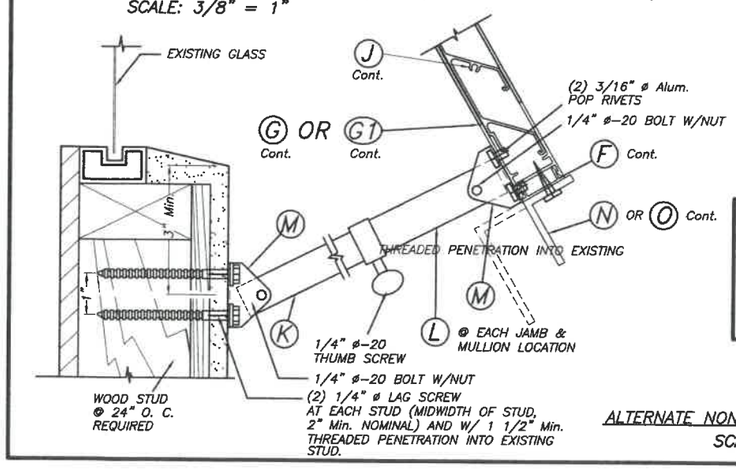

ALTERNATE NON HURRICANE POSITION DETAIL
SCALE: 3/8" = 1"

WALL MOUNTING INSTALLATION & BUILD-OUT – SECTION A

INSTALLATION DETAILS ON EXISTING WOOD BUILDINGS

NOTES :

1. INSTALLATIONS ARE ONLY VALID FOR INSTALLATIONS WITH MAX. A.S.D. DESIGN PRESSURE RATING LESS OR EQUAL THAN +62.0, -75.0 p.s.f. AND Max. SHUTTER SPAN AS PER SCHEDULES ON SHEET 9.
2. FOR NEW WOOD FRAME CONSTRUCTION: WOOD MEMBERS TO BE SOUTHERN PINE No. 2, W/ SPECIFIC DENSITY OF 0.55 OR EQUAL.

WALTER A. TILLIT JR. LICENSE No. 44167 STATE OF FLORIDA PROFESSIONAL ENGINEER

7/2/2020

©2020 TILTECO, INC.

TILTECO INC.
TILLIT TESTING & ENGINEERING COMPANY
6355 N.W. 36th. St., Ste. 305, VIRGINIA GARDENS, FLORIDA 33166
Phone : (305)871-1530 . Fax : (305)871-1531
e-mail: tilteco@aol.com
CA-0006719
WALTER A. TILLIT Jr., P.E.
FLORIDA Lic. # 44167

FLORIDA BUILDING CODE (Non High Velocity Hurricane Zone)

COMBINATION DRAWING:
ASSA / EXTRUDED BERTHA BAHAMA SHUTTER (SHEETS 1 THRU 9 OF 33)
ASSA / BERTHA COLONIAL SHUTTER (SHEETS 10 THRU 33 OF 33)

ASSA / EXTRUDED BERTHA BAHAMA SHUTTER

M.P.
DRAWN BY:

AMERICAN SHUTTER SYSTEMS ASSOC., INC.
4268 WEST ROADS DRIVE
WEST PALM BEACH, FL. 33407
PHONE: (800)432-2204
FAX: (561)209-8380

7/2/2020
DATE:

20-167
DRAWING No

REV. No	DESCRIPTION	DATE	REV. No	DESCRIPTION	DATE
1	OLD 17-114	7/2/2020	3	–	–
2			4	–	–

SHEET 7 OF 33

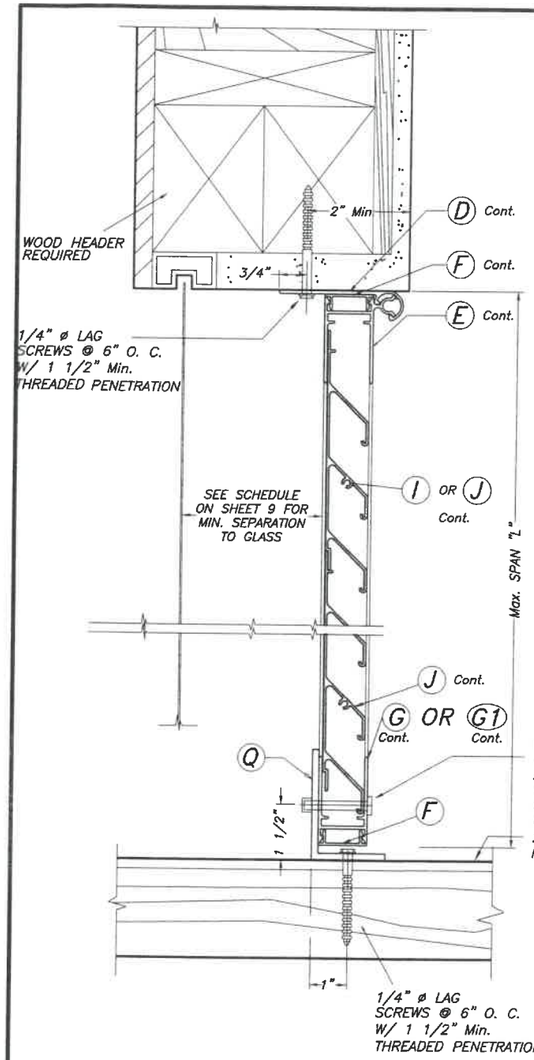

ALTERNATIVE 4A

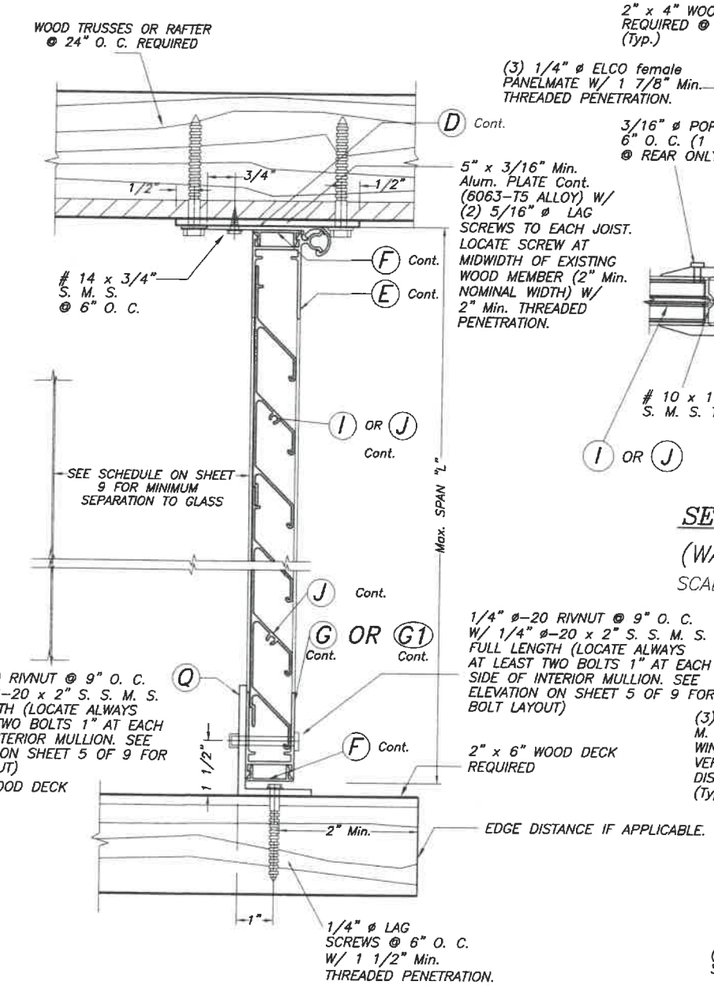

ALTERNATIVE 4B

FLOOR/CEILING MOUNTING INSTALLATION – SECTION A

SCALE: 1/4" = 1"

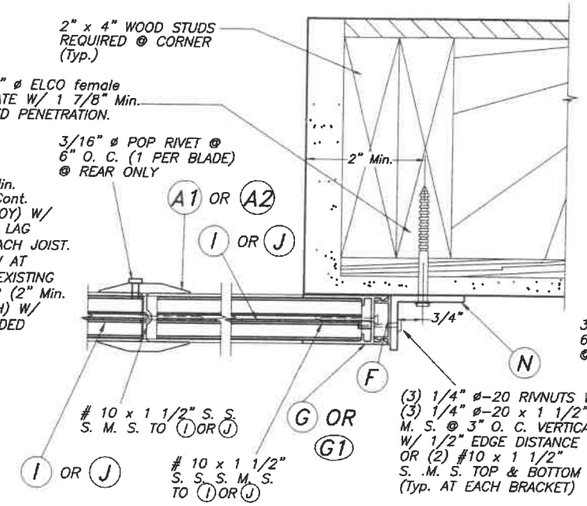

SECTION A–A

(WALL MOUNT)

SCALE : 1/4" = 1"

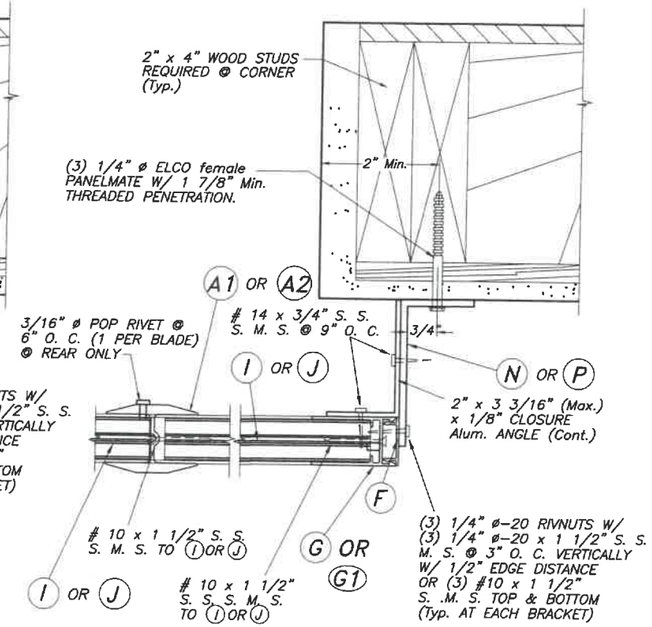

SECTION B–B

(WALL MOUNT)

SCALE : 1/4" = 1"

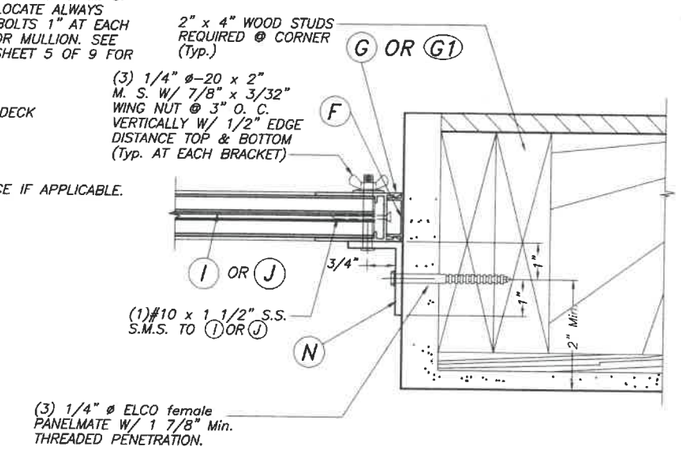

SECTION G–G

(FLOOR/CEILING MOUNT)

SCALE : 1/4" = 1"

INSTALLATION DETAILS ON EXISTING WOOD BUILDINGS

NOTES :

1. INSTALLATIONS ARE ONLY VALID FOR INSTALLATIONS WITH MAX. A.S.D. DESIGN PRESSURE RATING LESS OR EQUAL THAN +62.0, -75.0 p.s.f. AND Max. SHUTTER SPAN AS PER SCHEDULES ON SHEET 9.
2. FOR NEW WOOD FRAME CONSTRUCTION: WOOD MEMBERS TO BE SOUTHERN PINE No. 2, W/ SPECIFIC DENSITY OF 0.55 OR EQUAL.

WALTER A. TILLIT JR. LICENSE No. 44167 STATE OF FLORIDA PROFESSIONAL ENGINEER

7/2/2020

©2020 TILTECO, INC.

TILTECO INC.
TILLIT TESTING & ENGINEERING COMPANY
6355 N.W. 36th. St., Ste. 305, VIRGINIA GARDENS, FLORIDA 33166
Phone : (305)871-1530 . Fax : (305)871-1531
e-mail: tilteco@aol.com
CA-0006719
WALTER A. TILLIT Jr., P.E.
FLORIDA Lic. # 44167

FLORIDA BUILDING CODE (Non High Velocity Hurricane Zone)

COMBINATION DRAWING:
ASSA / EXTRUDED BERTHA BAHAMA SHUTTER (SHEETS 1 THRU 9 OF 33)
ASSA / BERTHA COLONIAL SHUTTER (SHEETS 10 THRU 33 OF 33)

ASSA / EXTRUDED BERTHA BAHAMA SHUTTER

M.P.
DRAWN BY:

AMERICAN SHUTTER SYSTEMS ASSOC., INC.
4268 WEST ROADS DRIVE
WEST PALM BEACH, FL. 33407
PHONE: (800)432-2204
FAX: (561)209-8380

7/2/2020
DATE:

20-167
DRAWING No

REV. No	DESCRIPTION	DATE	REV. No	DESCRIPTION	DATE
1	OLD 17-114	7/2/2020	3	–	–
2			4	–	–

SHEET 8 OF 33

SCHEDULE # 1

MAXIMUM SINGLE UNIT FOR A CORRESPONDING A.S.D. DESIGN PRESSURE RATING AND MOUNTING TYPE

BAHAMA SHUTTER TYPE

SINGLE UNIT ELEVATION

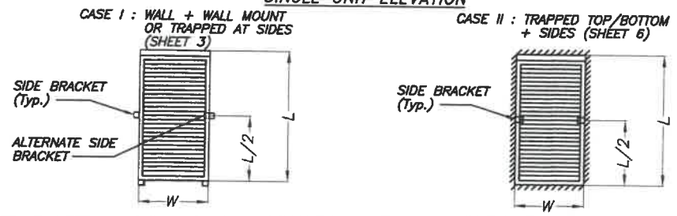

MAX. A.S.D. DESIGN PRESSURE RATING (p.s.f.) AND CASE #	MAXIMUM UNIT WIDTH "W" (IN)	MAXIMUM SPAN "L" (IN)		
		W/O SIDE BRACKET	W/ SIDE BRACKET	MINIMUM SEPARATION TO GLASS (IN)
CASES I & II +56.0 , −63.0	42"	52"	N/A	3 1/8"
CASES I & II +75.0 , −100.0	42"	N/A	96"	2 1/8"

SCHEDULE # 1A

MAXIMUM MULTIPLE UNIT FOR A CORRESPONDING A.S.D. DESIGN PRESSURE RATING AND MOUNTING TYPE

BAHAMA SHUTTER TYPE

MULTIPLE UNIT ELEVATION

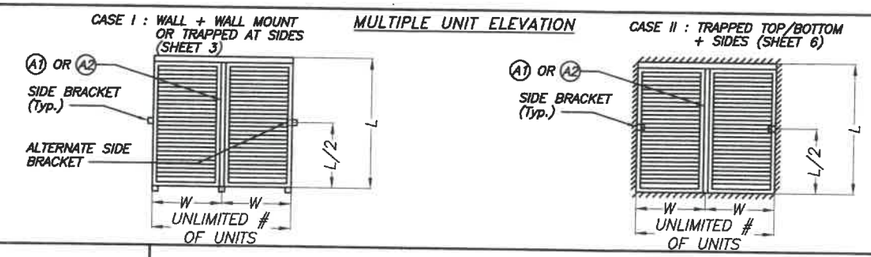

MAX. A.S.D. DESIGN PRESSURE RATING (p.s.f.) AND CASE #	MAXIMUM UNIT WIDTH "W" (IN)	MAXIMUM SPAN "L" (IN)			
		W/O SIDE BRACKET	W/ SIDE BRACKET	INTERIOR MULLION TYPE REQUIRED	MINIMUM SEPARATION TO GLASS (IN)
CASE I +50.0 , −43.3	36 1/2"	72 1/2"	N/A	A1	2 1/2"
CASE I +62.0 , −75.0	36 1/2"	N/A	83"	A2	2 3/8"
CASE II +62.0 , −75.0	36 1/2"	N/A	84"	A2	2 3/8"

SCHEDULE # 2

LIMITATIONS FOR SINGLE AND MULTIPLE UNITS BAHAMA SHUTTER'S UNIT WIDTH (IN), SPAN L (IN) AND CORRESPONDING MAXIMUM A.S.D. DESIGN PRESSURE RATING (p.s.f.) FOR THE INSTALLATION OF SIDE & SILL BRACKETS INTO CONCRETE & MASONRY BUILDINGS BY MEANS OF (3) 1/4" ø x 7/8" CALK-IN ANCHORS *

MAXIMUM NEGATIVE A.S.D. DESIGN PRESSURE RATING (p.s.f.)	SINGLE UNITS SIDE & SILL BRACKETS **				MULTIPLE UNITS SIDE & SILL BRACKETS **			
	TO CONCRETE		TO BLOCK		TO CONCRETE		TO BLOCK	
	Max. "W"	Max. "L"	Max. "W"	Max. "L"	Max. "W"	Max. "L"	Max. "W"	Max. "L"
−55.7	42"	96"	42"	96"	36 1/2"	84"	36"	84"
−65.0	42"	96"	42"	96"	36 1/2"	84"	36" 31"	72" 84"
−75.0	42"	96"	42"	96"	36 1/2"	83"	36 1/2" 27"	62" 83"
−83.0	42"	96"	42"	96"	N/A	N/A	N/A	N/A
−100.0	42"	96"	42" 36"	63 73	N/A	N/A	N/A	N/A

* FOR ELCO PANELMATES ((3) 1/4" ø W/ 1 7/8" PENETRATION) USED AT SILL & SIDE BRACKETS FOR INSTALLATIONS INTO WOOD. SEE SCHEDULES # 1 & # 1A FOR SHUTTER SIZE.

** IN ANY CASE, MAXIMUM "W" & "L" VALUES W/ CORRESPONDING A.S.D. DESIGN PRESSURE RATING SHALL NOT EXCEED MAXIMUM VALUES INDICATED ON SCHEDULES # 1 & 1A.

SCHEDULE # 3

MAXIMUM ANCHOR SPACING AT TOP FEMALE HINGES Ⓑ, Ⓒ, OR Ⓓ AS WELL AS SILL ANGLE Ⓐ AT BOTTOM (AS APPLICABLE) FOR INSTALLATIONS INTO POURED CONCRETE HEADERS AND SILL ***

MAXIMUM A.S.D. DESIGN PRESSURE RATING (p. s. f.)	SINGLE & MULTIPLE UNITS
	TOP & BOTTOM TO CONCRETE
ALL PRESSURES COVERED IN SCHEDULE # 1 & # 1A	9" O.C. TOP & 7" O.C. BOTTOM.

*** SEE SHEETS 7 & 8 FOR ANCHOR SPACING FOR INSTALLATIONS INTO WOOD FRAME BUILDINGS.

WALTER A. TILLIT JR. LICENSE No. 44167 STATE OF FLORIDA PROFESSIONAL ENGINEER

7/9/2020

FLORIDA BUILDING CODE (Non High Velocity Hurricane Zone)

COMBINATION DRAWING:
ASSA / EXTRUDED BERTHA BAHAMA SHUTTER (SHEETS 1 THRU 9 OF 33)
ASSA / BERTHA COLONIAL SHUTTER (SHEETS 10 THRU 33 OF 33)

©2020 TILTECO, INC.

TILTECO INC.
TILLIT TESTING & ENGINEERING COMPANY
6355 N.W. 36th. St., Ste. 305, VIRGINIA GARDENS, FLORIDA 33166
Phone : (305)871-1530 . Fax : (305)871-1531
e-mail: tilteco@aol.com
CA-0006719
WALTER A. TILLIT Jr., P.E.
FLORIDA Lic. # 44167

ASSA / EXTRUDED BERTHA BAHAMA SHUTTER

AMERICAN SHUTTER SYSTEMS ASSOC., INC.
4268 WEST ROADS DRIVE
WEST PALM BEACH, FL. 33407
PHONE: (800)432-2204
FAX: (561)209-8380

M.P.
DRAWN BY:

7/2/2020
DATE:

20-167
DRAWING No

REV. No	DESCRIPTION	DATE	REV. No	DESCRIPTION	DATE
1	OLD 17-114	7/2/2020	3	–	–
2			4	–	–

GENERAL NOTES:

1. **COLONIAL SHUTTER** SHOWN ON THIS PRODUCT EVALUATION DOCUMENT (P.E.D.) HAS BEEN VERIFIED FOR COMPLIANCE IN ACCORDANCE WITH THE **2020 (7th EDITION)** OF THE FLORIDA BUILDING CODE.
THIS COLONIAL SHUTTER SHALL **NOT** BE INSTALLED AT HIGH VELOCITY HURRICANE ZONES (MIAMI DADE/BROWARD COUNTY).

DESIGN WIND LOADS SHALL BE DETERMINED AS PER SECTION **1609** OF THE ABOVE MENTIONED CODE, FOR A BASIC WIND SPEED REQUIRED BY THE JURISDICTION WHERE SHUTTER WILL BE INSTALLED. USING **ASCE 7-16** AND SHALL NOT EXCEED THE MAXIMUM (A.S.D.) DESIGN PRESSURE RATINGS INDICATED ON SHEETS 13, 14, 22 & 28.
IN ORDER TO VERIFY THE ABOVE CONDITION, ULTIMATE DESIGN WIND LOADS DETERMINED PER **ASCE 7-16** SHALL BE FIRST REDUCED TO A.S.D. DESIGN WIND LOADS BY MULTIPLYING THEM BY 0.6 IN ORDER TO COMPARE THESE W/ MAX. (A.S.D) DESIGN PRESSURE RATINGS INDICATED ON SHEETS 13, 14, 22 & 28.

IN ORDER TO VERIFY THAT ANCHORS ON THIS P.E.D., AS TESTED, WERE NOT OVERSTRESSED, A 33% INCREASE IN ALLOWABLE STRESS FOR WIND LOADS WAS USED IN THEIR ANALYSIS. HOWEVER,FOR LAG SCREWS INTO WOOD,A 1.60 WIND LOAD DURATION FACTOR WAS USED TO CALCULATE SCREWS SPACINGS.
COLONIAL SHUTTER'S ADEQUACY FOR IMPACT AND FATIGUE RESISTANCE HAS BEEN VERIFIED IN ACCORDANCE WITH SECTION 1609.1.2 OF THE ABOVE MENTIONED CODE AS PER ATL REPORTS #0624.01-98R, #1005.01-00, #0309.01-04 AND 0926.01-07 AS PER TAS-201, TAS-202 AND TAS-203 PROTOCOLS

2. ALL ALUMINUM EXTRUSIONS SHALL BE ALUMINUM ASSOCIATION 6063-T6 ALLOY AND TEMPER, WITH Fy= 25.0 ksi MINIMUM YIELD STRENGTH (UNLESS OTHERWISE NOTED). ALL ALUMINUM EXTRUSIONS IN CONTACT WITH DISSIMILAR MATERIALS SHALL COMPLY WITH SECTION III-6 OF THE 2015 ALUMINUM DESIGN MANUAL.

3. ALL SCREWS TO BE STAINLESS STEEL 304 OR 316 AISI SERIES OR CORROSION RESISTANT COATED CARBON STEEL AS PER DIN 50018 WITH 50 ksi YIELD STRENGTH AND 90 ksi TENSILE STRENGTH & SHALL COMPLY W/ FLORIDA BUILDING CODE SECTION 2411.3.3.4.

4. BOLTS TO BE ALUMINUM ASSOCIATION 2024-T4 ALLOY AND TEMPER, ASTM A-307 GALVANIZED STEEL, OR AISI 304 SERIES STAINLESS STEEL WITH 35 ksi MINIMUM YIELD STRENGTH.

5. ALL ALUMINUM POP RIVETS TO BE 5052 ALUMINUM ALLOY WITH ALUMINUM MANDREL.

6. ANCHORS TO WALL SHALL BE AS FOLLOWS (UNLESS OTHERWISE NOTED) SEE DETAILS FOR APPLICABILITY:

(A) TO EXISTING POURED CONCRETE: (Min f'c= 3000 p.s.i)
- 1/4"ø TAPCON ANCHORS AS MANUFACTURED BY I.T.W. BUILDEX, INC.
- 1/4"ø x 7/8" CALK-IN ANCHORS AS MANUFACTURED BY DEWALT, INC.

NOTES:
A.1) MINIMUM EMBEDMENT OF TAPCON ANCHORS INTO POURED CONCRETE IS 1 1/2".

A.2) CALK-IN ANCHORS SHALL BE ENTIRELY EMBEDDED INTO THE POURED CONCRETE. NO EMBEDMENT INTO STUCCO SHALL BE PERMITTED.
1/4"ø-20 SCREWS USED SHALL BE 1 1/2" LONG MINIMUM SHOULD STUCCO EXIST AND 1" MINIMUM FOR WALLS WITH NO STUCCO.

A.3) IN CASE THAT PRECAST STONE, PRECAST CONCRETE PANELS, OR PAVERS BE FOUND ON THE EXISTING WALL OR FLOOR, ANCHORS SHALL BE LONG ENOUGH TO REACH THE MAIN STRUCTURE BEHIND SUCH PANELS. ANCHORAGE SHALL BE AS INDICATED ON NOTES A.1) & A.2) ABOVE.

(B) TO EXISTING CONCRETE BLOCK WALL: (Min. f'= 1500 psi)
- 1/4"ø TAPCON ANCHORS AS MANUFACTURED BY I.T.W. BUILDEX, INC.
- 1/4"ø x 7/8" CALK-IN ANCHORS AS MANUFACTURED BY DEWALT, INC.

NOTES:
B.1) MINIMUM EMBEDMENT OF TAPCON ANCHORS INTO THE CONCRETE BLOCK UNIT SHALL BE 1 1/4".

B.2) CALK-IN ANCHORS SHALL BE ENTIRELY EMBEDDED INTO THE CONCRETE BLOCK UNIT.
NO EMBEDMENT INTO STUCCO SHALL BE PERMITTED.
1/4" ø-20 SCREWS USED SHALL BE 1 1/2" LONG MINIMUM SHOULD STUCCO EXIST AND 1" MINIMUM FOR WALLS WITH NO STUCCO.

B.3) IN CASE THAT PRECAST STONE OR PRECAST CONCRETE PANELS BE FOUND ON THE EXISTING WALL, ANCHORS SHALL BE LONG ENOUGH TO REACH THE MAIN STRUCTURE BEHIND SUCH PANELS. ANCHORAGE SHALL BE AS INDICATED ON NOTES B.1) & B.2) ABOVE.

(C) TO EXISTING WOOD (MIN. SPECIFIC GRAVITY, G=0.55 MIN.) FRAME BUILDING. ANCHORAGE SHALL BE PERFORMED BEYOND ANY FINISH MATERIAL AT WALL LIKE BRICK VENEER, PLYWOOD, STUCCO OR ANY OTHER FINISH.
-1/4" ø TAPCON ANCHORS MANUFACTURED BY I.T.W. BUILDEX OR 1/4"ø LAG SCREWS (NDS 2012).
USE TAPCON ANCHORS FOR INSTALATIONS WITH STORM BARS AND USE LAG SCREWS FOR INSTALLATIONS WITHOUT STORM BARS

NOTE:
C.1) MINIMUM THREADED PENETRATION INTO WOOD FOR TAPCON ANCHORS OR LAG SCREWS IS 1 1/2" MIN.

(D) ANCHORS SHALL BE INSTALLED FOLLOWING ALL OF THE RECOMMENDATIONS AND SPECIFICATIONS OF THE ANCHOR'S MANUFACTURER.

7. EACH SHUTTER SHALL HAVE A LEGIBLE AND READILY VISIBLE MARKING INSTRUCTING OWNER OR TENANT TO SECURE SHUTTER WITH HEAD & SILL BRACKETS WHEN USED W/O STORM BARS OR TO SECURE SHUTTERS W/ STORM BARS AND SAFETY BOLTS DURING PERIODS OF HURRICANE WARNINGS.

8. OWNER TO BE RESPONSIBLE FOR PROVIDING A SUITABLE PLATFORM OR BALCONY WHEN SECURING UNIT DURING HURRICANE WARNINGS.

9. IT SHALL BE THE RESPONSIBILITY OF THE CONTRACTOR TO VERIFY THE SOUNDNESS OF THE STRUCTURE WHERE SHUTTER IS TO BE ATTACHED TO INSURE PROPER ANCHORAGE. CONTRACTOR TO SEAL/CAULK ALL SHUTTER COMPONENT EDGES WHICH REMAIN IN CONTINUOUS CONTACT WITH THE BUILDING TO PREVENT WIND/RAIN INTRUSION. CAULK AND SEAL SHUTTER TRACKS ALL AROUND FULL LENGTH.

10. BERTHA COLONIAL SHUTTER'S INSTALLATION SHALL COMPLY WITH SPECS INDICATED IN THIS DRAWING PLUS ANY BUILDING AND ZONING REGULATIONS PROVIDED BY THE JURISDICTION WHERE PERMIT IS APPLIED TO.

11. SHUTTER MANUFACTURER'S LABEL SHALL BE LOCATED ON A READILY VISIBLE LOCATION AT SURFACE OF THE COLONIAL FRAME (E) OR (E) IN ACCORDANCE WITH SECTION 1709.9.3 OF FLORIDA BUILDING CODE. ONE LABEL SHALL BE PLACED FOR EVERY OPENING. LABELING TO COMPLY WITH SECTION 1709.9.2 OF THE FLORIDA BUILDING CODE.

12. (a) THIS PRODUCT EVALUATION DOCUMENT (P.E.D.) PREPARED BY THIS ENGINEER IS GENERIC AND DOES NOT PROVIDE INFORMATION FOR A SITE SPECIFIC PROJECT; i. e. WHERE THE SITE CONDITIONS DEVIATE FROM THE P.E.D.

(b) CONTRACTOR TO BE RESPONSIBLE FOR THE SELECTION, PURCHASE AND INSTALLATION INCLUDING LIFE SAFETY OF THIS PRODUCT, BASED ON THIS PRODUCT EVALUATION DOCUMENT, PROVIDED HE/SHE DOES NOT DEVIATE FROM THE CONDITIONS DETAILED ON THIS DOCUMENT. CONSTRUCTION SAFETY AT SITE IS THE CONTRACTOR'S RESPONSIBILITY.

(c) THIS PRODUCT EVALUATION DOCUMENT WILL BE CONSIDERED INVALID IF ALTERED BY ANY MEANS.

(d) SITE SPECIFIC PROJECTS SHALL BE PREPARED BY A FLORIDA REGISTERED ENGINEER OR ARCHITECT WHICH WILL BECOME THE ENGINEER OF RECORD (E.O.R.) FOR THE PROJECT AND WHO WILL BE RESPONSIBLE FOR THE PROPER USE OF THE P.E.D. ENGINEER OF RECORD, ACTING AS A DELEGATED ENGINEER TO THE P.E.D. ENGINEER, SHALL SUBMIT TO THIS LATTER THE SITE SPECIFIC DRAWINGS FOR REVIEW.

(e) ORIGINAL P.E.D. SHALL BEAR THE DATE AND ORIGINAL SEAL AND SIGNATURE OF THE PROFESSIONAL ENGINEER OF RECORD THAT PREPARED IT.

WALTER A. TILLIT JR. LICENSE No. 44167 STATE OF FLORIDA PROFESSIONAL ENGINEER

7/2/2020

FLORIDA BUILDING CODE (Non High Velocity Hurricane Zone)

COMBINATION DRAWING:
ASSA / EXTRUDED BERTHA BAHAMA SHUTTER (SHEETS 1 THRU 9 OF 33)
ASSA / BERTHA COLONIAL SHUTTER (SHEETS 10 THRU 33 OF 33)

©2020 TILTECO, INC.

TILTECO INC.
TILLIT TESTING & ENGINEERING COMPANY
6355 N.W. 36th. St., Ste. 305, VIRGINIA GARDENS, FLORIDA 33166
Phone : (305)871-1530 . Fax : (305)871-1531
CA-0006719
WALTER A. TILLIT Jr., P.E.
FLORIDA Lic. # 44167

ASSA / BERTHA COLONIAL SHUTTER (WITH CLIPS OR STORM BARS)

AMERICAN SHUTTER SYSTEMS ASSOC., INC.
4268 WEST ROADS DRIVE
WEST PALM BEACH, FL. 33407
PHONE: (800)432-2204
FAX: (561)209-8380

REV. No	DESCRIPTION	DATE	REV. No	DESCRIPTION	DATE
1	OLD 17-114	7/2/2020	3		
2			4		

M.P
DRAWN BY:

7/2/2020
DATE:

20-167
DRAWING No

SHEET 10 OF 33

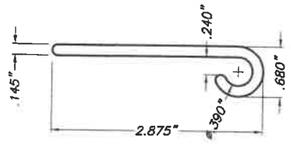

Ⓑ FLAT HINGE

ALUMINUM EXTRUSION 3" LONG AT
Ⓓ OR Ⓒ; 1 1/2" LONG @ PANEL JOINTS

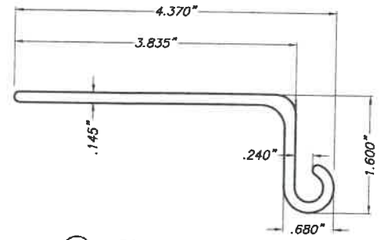

Ⓒ SINGLE HINGE

ALUMINUM EXTRUSION, 3" LONG

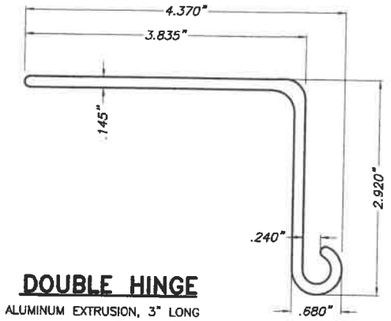

Ⓓ DOUBLE HINGE

ALUMINUM EXTRUSION, 3" LONG

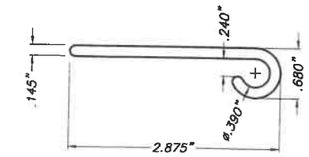

Ⓑ' FLAT HINGE

2.375" LONG
ALUMINUM EXTRUSION

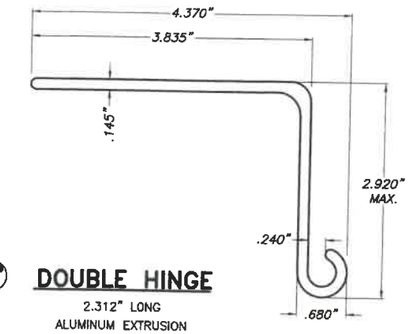

Ⓓ' DOUBLE HINGE

2.312" LONG
ALUMINUM EXTRUSION

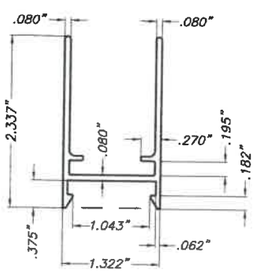

Ⓔ COLONIAL FRAME

ALUMINUM EXTRUSION

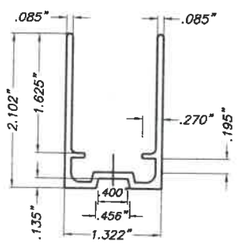

Ⓔ1 ALTERNATE COLONIAL FRAME

ALUMINUM EXTRUSION

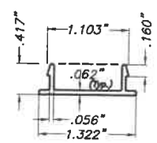

Ⓕ SNAP CAP

ALUMINUM EXTRUSION

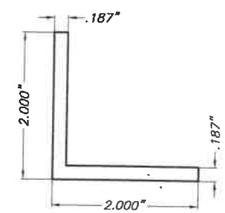

Ⓖ CORNER KEY

1 1/8" LONG
ALUMINUM EXTRUSION

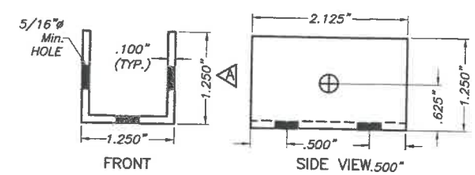

Ⓝ H.V. STORM BAR CLIP

2 1/8" LONG.
ALUMINUM EXTRUSION

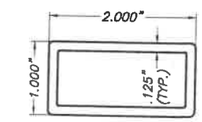

Ⓞ STORM BAR TYPE 1

ALUMINUM EXTRUSION

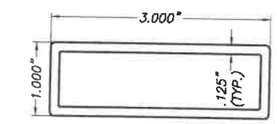

Ⓞ1 STORM BAR TYPE 2

ALUMINUM EXTRUSION

COMPONENTS VALIDITY SCHEDULE		
COMPONENTS	USED WITH	
	CLIPS	STORM BARS
Ⓑ	YES	NO
Ⓑ'	NO	YES
Ⓒ	YES	NO
Ⓓ	YES	NO
Ⓓ'	NO	YES
Ⓔ	YES	YES
Ⓔ1	YES	YES
Ⓕ	YES	YES
Ⓖ	YES	YES
Ⓗ	YES	YES
Ⓘ	YES	YES
Ⓝ	NO	YES
Ⓞ	NO	YES
Ⓞ1	NO	YES
Ⓠ1	NO	YES
Ⓠ2	NO	YES

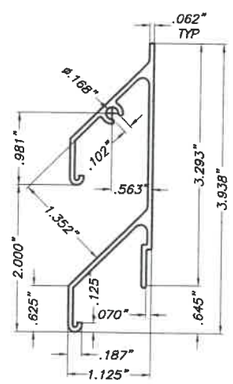

Ⓗ HALF SHUTTER BLADE

ALUMINUM EXTRUSION

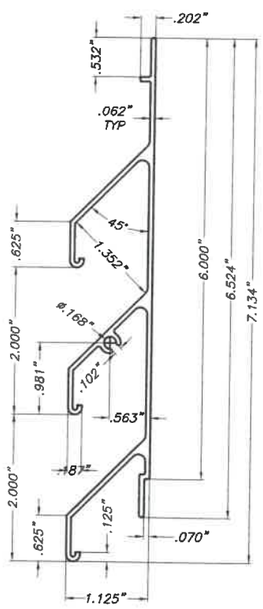

Ⓘ SHUTTER BLADE

ALUMINUM EXTRUSION

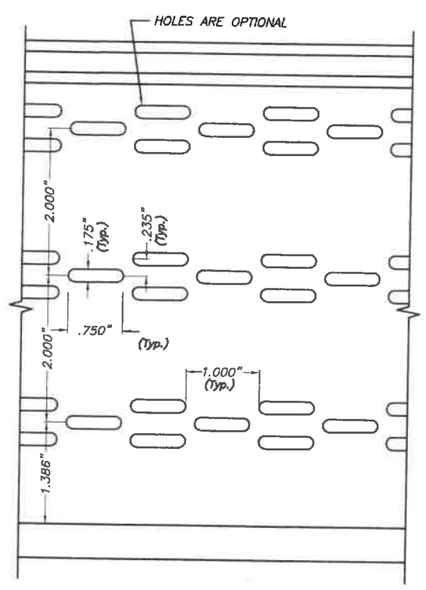

SHUTTER BLADE ELEVATION

ALUMINUM EXTRUSION

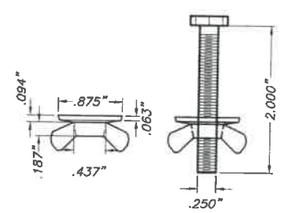

Ⓠ1 1/4"ø-20X2" 304 SERIES S.S. HEX HEAD BOLT W/ DIE CAST (ZINC #7) NICKEL PLATED WASHER WINGNUT

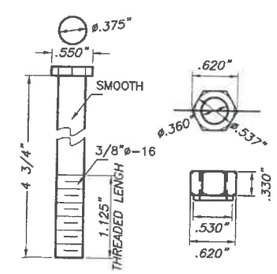

Ⓠ2 ALUMINUM PIN FOR HINGE

6061-T6 Alum. ALLOY

COMPONENTS

SCALE: 1/2" = 1"

WALTER A. TILLIT JR. LICENSE No. 44167 STATE OF FLORIDA PROFESSIONAL ENGINEER

©2020 TILTECO, INC.

TILTECO INC.
TILLIT TESTING & ENGINEERING COMPANY
6355 N.W. 36th. St., Ste. 305, VIRGINIA GARDENS, FLORIDA 33166
Phone : (305)871-1530 . Fax : (305)871-1531
CA-0006719
WALTER A. TILLIT Jr., P.E.
FLORIDA Lic. # 44167

FLORIDA BUILDING CODE (Non High Velocity Hurricane Zone)

COMBINATION DRAWING:
ASSA / EXTRUDED BERTHA BAHAMA SHUTTER (SHEETS 1 THRU 9 OF 33)
ASSA / BERTHA COLONIAL SHUTTER (SHEETS 10 THRU 33 OF 33)

ASSA / BERTHA COLONIAL SHUTTER (WITH CLIPS OR STORM BARS)

AMERICAN SHUTTER SYSTEMS ASSOC., INC.
4268 WEST ROADS DRIVE
WEST PALM BEACH, FL. 33407
PHONE: (800)432-2204
FAX: (561)209-8380

M.P
DRAWN BY:

7/2/2020
DATE:

20-167
DRAWING No

REV. No	DESCRIPTION	DATE	REV. No	DESCRIPTION	DATE
1	OLD 17-114	7/2/2020	3		
2			4		

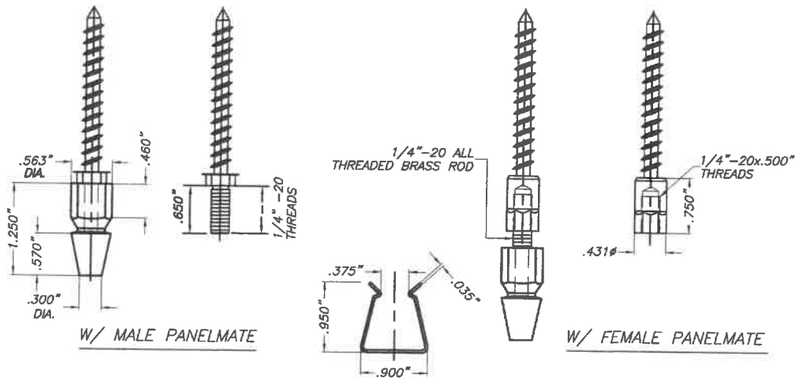

(L) SPRING TEMPERED BRASS "U" CHANNEL (1" LONG) & 1/4" ELCO TEXTRON MALE OR FEMALE PANELMATE ANCHOR W/ 360 BRASS THREADED NUT

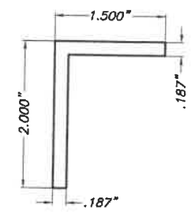

(J) WALL MOUNT Alum. BRACKET
4" LONG
ALUMINUM EXTRUSION

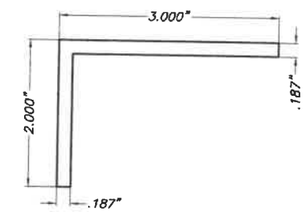

(K) BUILD-OUT Alum. BRACKET
4" LONG
ALUMINUM EXTRUSION

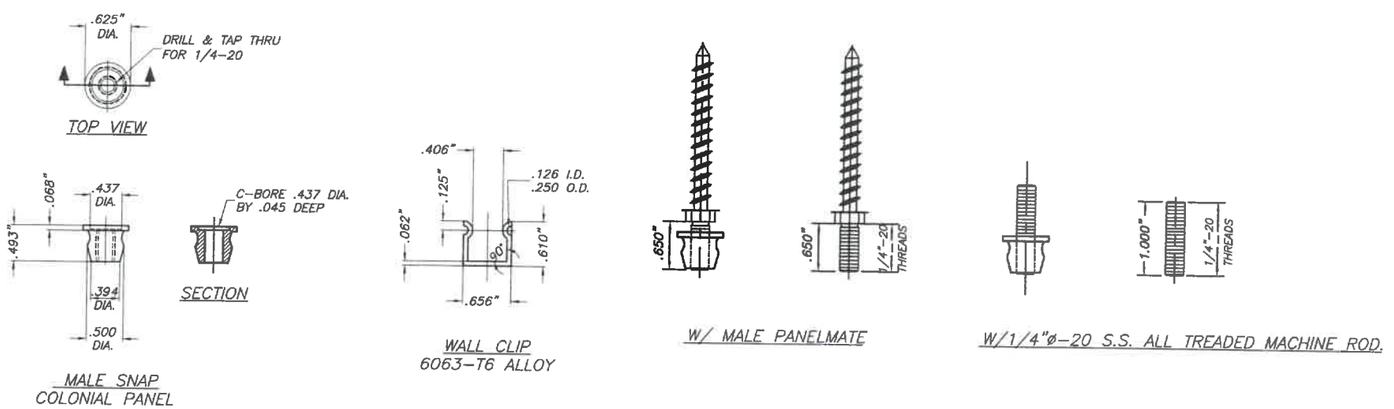

(M) ALTERNATE ALUMINUM "U" CHANNEL (1" LONG) & 1/4" ELCO TEXTRON MALE PANELMATE ANCHOR OR W/1/4"ø-20 S.S. MACHINE ROD

COMPONENTS

SCALE: 1/2" = 1"

WALTER A. TILLIT JR. LICENSE No. 44167 STATE OF FLORIDA PROFESSIONAL ENGINEER

7/2/2020

©2020 TILTECO, INC.

TILTECO INC.
TILLIT TESTING & ENGINEERING COMPANY
6355 N.W. 36th. St., Ste. 305, VIRGINIA GARDENS, FLORIDA 33166
Phone : (305)871-1530 . Fax : (305)871-1531
e-mail: tilteco@aol.com
CA-0006719
WALTER A. TILLIT Jr., P.E.
FLORIDA Lic. # 44167

FLORIDA BUILDING CODE (Non High Velocity Hurricane Zone)

COMBINATION DRAWING:
ASSA / EXTRUDED BERTHA BAHAMA SHUTTER (SHEETS 1 THRU 9 OF 33)
ASSA / BERTHA COLONIAL SHUTTER (SHEETS 10 THRU 33 OF 33)

ASSA / BERTHA COLONIAL SHUTTER (WITH CLIPS)

M.P
DRAWN BY:

AMERICAN SHUTTER SYSTEMS ASSOC., INC.
4268 WEST ROADS DRIVE
WEST PALM BEACH, FL. 33407
PHONE: (800)432-2204
FAX: (561)209-8380

7/2/2020
DATE:

20-167
DRAWING No

REV. No	DESCRIPTION	DATE	REV. No	DESCRIPTION	DATE
1	OLD 17-114	7/2/2020	3		
2			4		

SHEET 12 OF 33

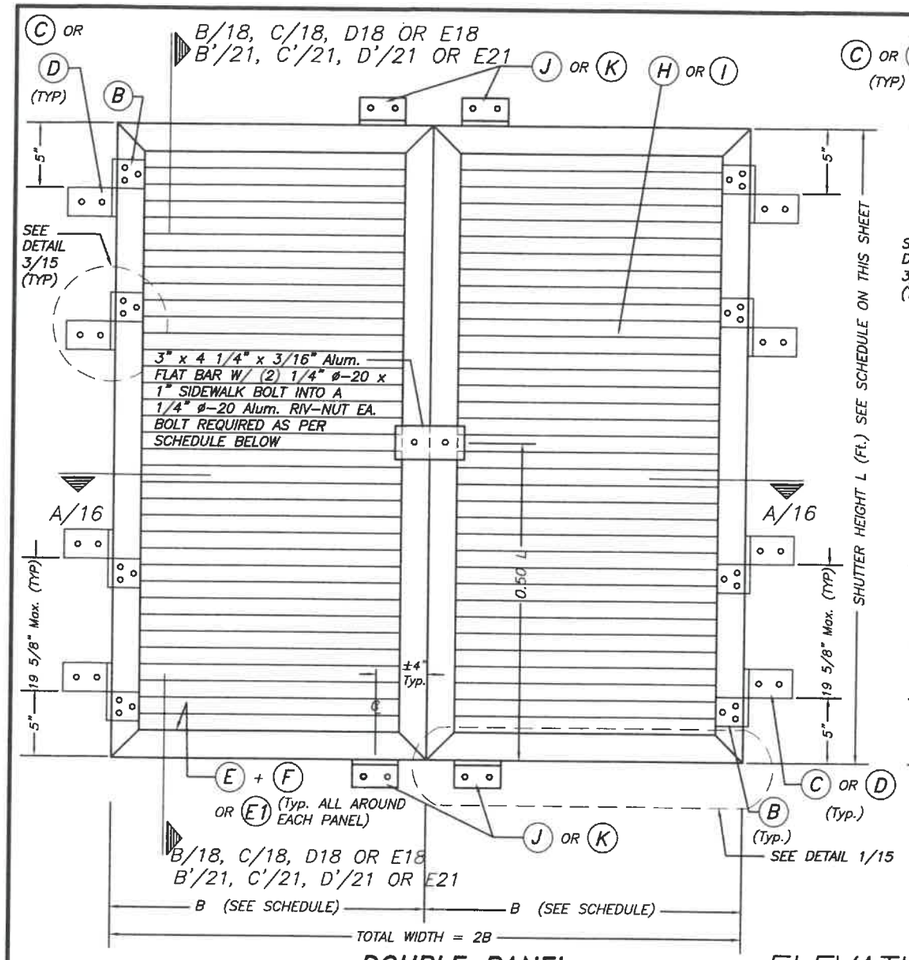

DOUBLE PANEL

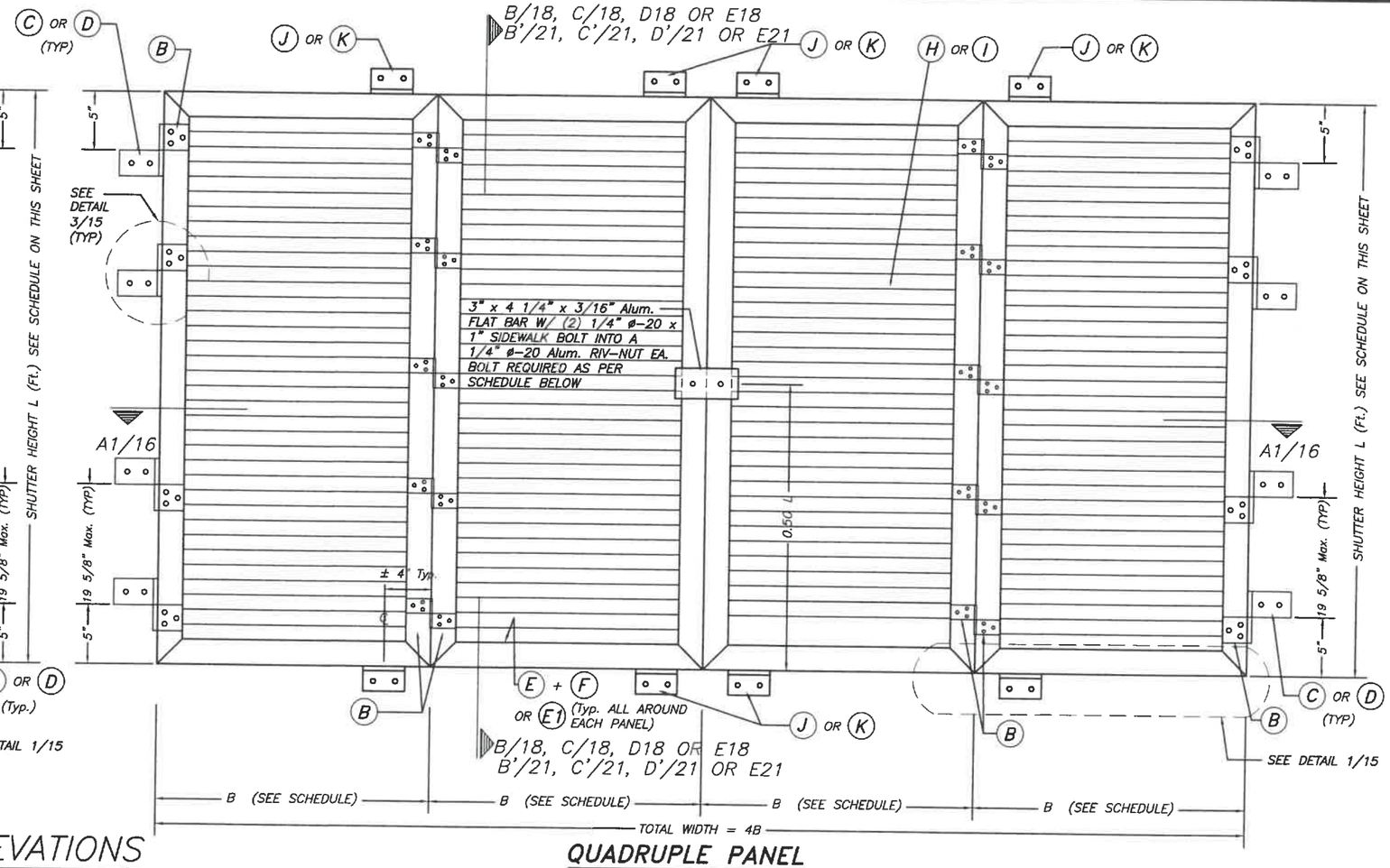

QUADRUPLE PANEL

ELEVATIONS

N. T. S.

MINIMUM SEPARATION TO GLASS SCHEDULE FOR PERFORATED OR NOT SHUTTER BLADES

BLADES (H) OR (I) CONDITION	MINUMUM SEPARATION TO GLASS
PERFORATED BLADES AS SHOWN ON SHEET 11	3"
NOT PERFORATED (SOLID) BLADES	1"

MAXIMUM A.S.D. DESIGN PRESSURE RATING (p.s.f.) AND CORRESPONDING MAXIMUM PANEL'S WIDTH (B) AND SHUTTER'S HEIGHT (L) SCHEDULE

MAXIMUM A.S.D. DESIGN PRESSURE RATING(p.s.f.)	B (in.)	L (ft.)	FLAT BAR REQUIREMENTS AT CENTER OF SHUTTER
+36.0, −40.0	18"	8'−6"	YES
+36.0, −40.0	36"	6'−0"	YES
+65.0, −65.0	36"	4'−6"	NO
+69.0, −75.0	18 1/4"	6'−2 1/2"	NO
+80.0, −87.5	18 1/4"	6'−1"	NO
+100.0, −120.0	18"	4'−8"	NO

7/2/2020

WALTER A. TILLIT JR. LICENSE No. 44167 STATE OF FLORIDA PROFESSIONAL ENGINEER

FLORIDA BUILDING CODE (Non High Velocity Hurricane Zone)

COMBINATION DRAWING:
ASSA / EXTRUDED BERTHA BAHAMA SHUTTER (SHEETS 1 THRU 9 OF 33)
ASSA / BERTHA COLONIAL SHUTTER (SHEETS 10 THRU 33 OF 33)

©2020 TILTECO, INC.

TILTECO INC.
TILLIT TESTING & ENGINEERING COMPANY
6355 N.W. 36th. St., Ste. 305, VIRGINIA GARDENS, FLORIDA 33166
Phone : (305)871-1530 . Fax : (305)871-1531
e-mail: tilteco@aol.com
CA-0006719
WALTER A. TILLIT Jr., P.E.
FLORIDA Lic. # 44167

ASSA / BERTHA COLONIAL SHUTTER (WITH CLIPS)

AMERICAN SHUTTER SYSTEMS ASSOC., INC.
4268 WEST ROADS DRIVE
WEST PALM BEACH, FL. 33407
PHONE: (800)432-2204
FAX: (561)209-8380

M.P DRAWN BY:

7/2/2020 DATE:

20-167 DRAWING No

SHEET 13 OF 33

REV. No	DESCRIPTION	DATE	REV. No	DESCRIPTION	DATE
1	OLD 17-114	7/2/2020	3		
2			4		

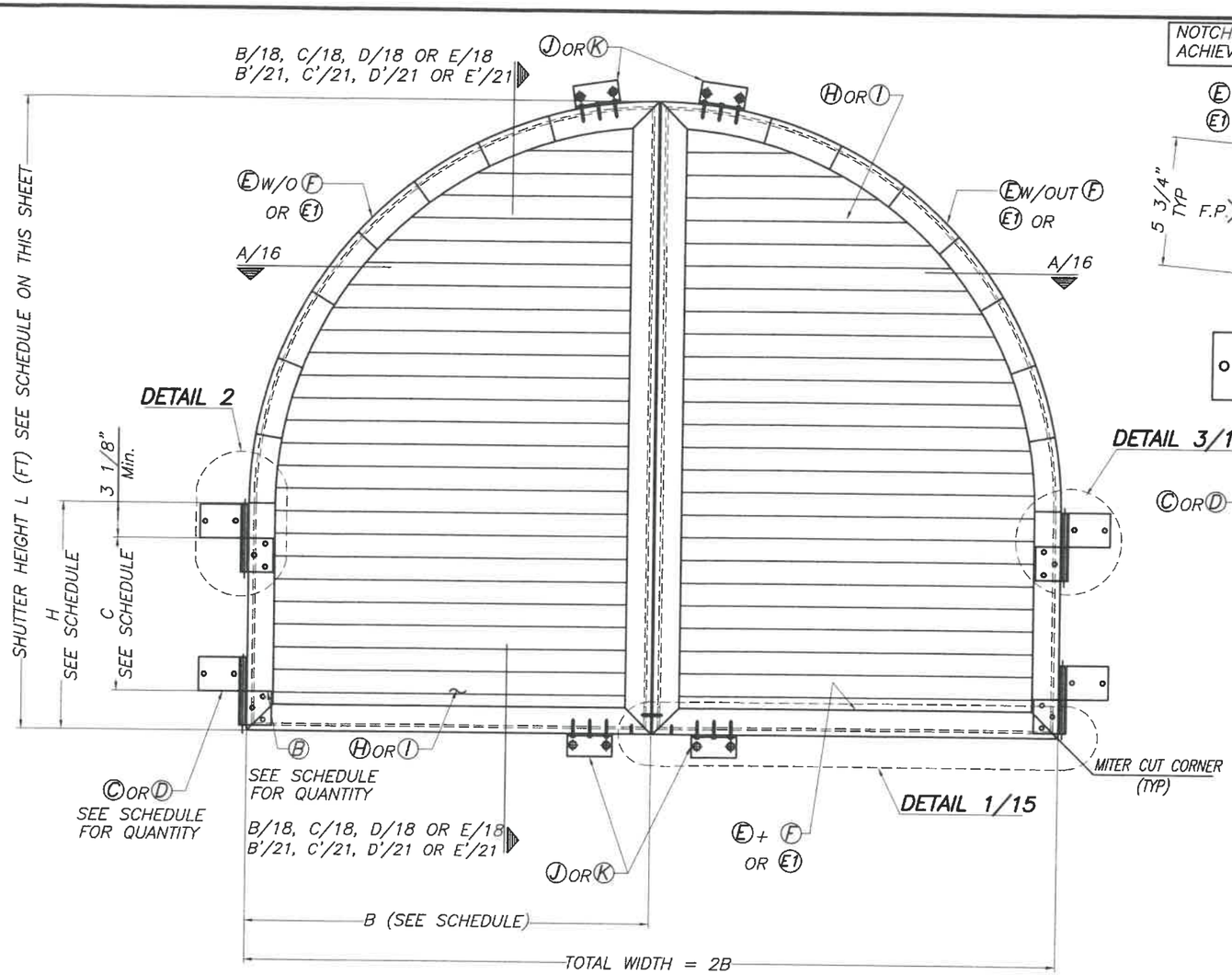

DOUBLE PANEL ELEVATION

SCALE: 1"=1'-0"

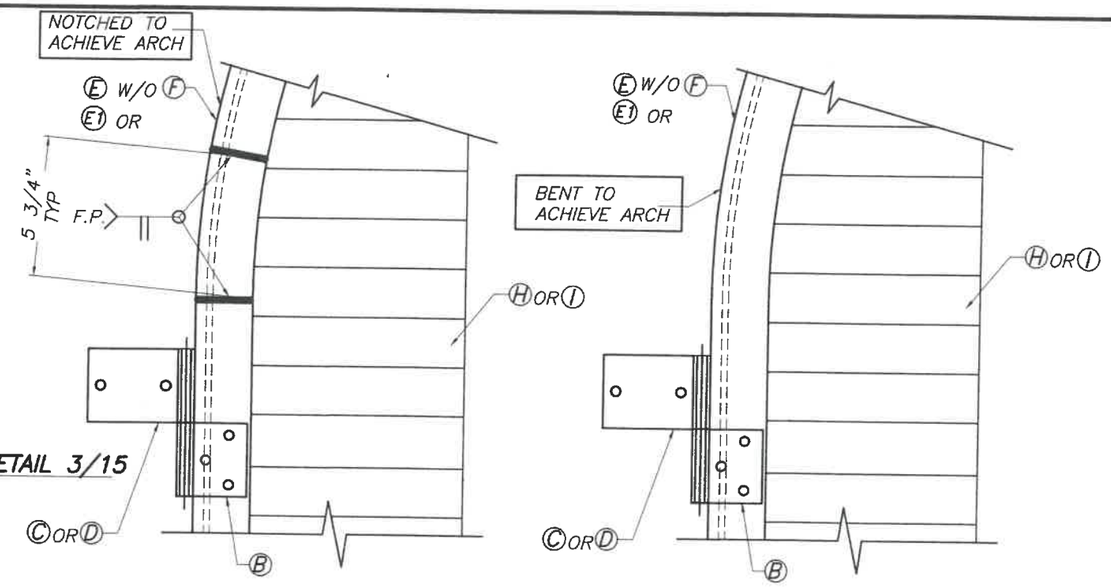

DETAIL 2

QUANTITY OF HINGES W/ Max. SEPARATION BETWEEN HINGES AND CORRESPONDING HEIGHT H (in)

QUANTITY OF HINGES	C Max. SEPARATION BETWEEN HINGES	H (in.)
2	11 1/2"	20 1/8"
3	21 7/8"	51 1/4"

MINIMUM SEPARATION TO GLASS SCHEDULE FOR PERFORATED OR NOT SHUTTER BLADES

BLADES H OR I CONDITION	MINUMUM SEPARATION TO GLASS
PERFORATED BLADES AS SHOWN ON SHEET 11	3"
NOT PERFORATED (SOLID) BLADES	1"

MAXIMUM A.S.D. DESIGN PRESSURE RATING (p.s.f.) AND CORRESPONDING MAXIMUM PANEL'S WIDTH (B) SHUTTER'S HEIGHTS (L) & (H) SCHEDULE

MAXIMUM A.S.D DESIGN PRESSURE RATING (p.s.f.)	B (in.)	L (ft.)	H (in.)
+70.0, -85.0	36"	4'-6"	20 1/8"
+80.0, -87.5	18"	5'-9"	51 1/4"

WALTER A. TILLIT JR. LICENSE No. 44167 STATE OF FLORIDA PROFESSIONAL ENGINEER

7/2/2020

FLORIDA BUILDING CODE (Non High Velocity Hurricane Zone)

COMBINATION DRAWING:
ASSA / EXTRUDED BERTHA BAHAMA SHUTTER (SHEETS 1 THRU 9 OF 33)
ASSA / BERTHA COLONIAL SHUTTER (SHEETS 10 THRU 33 OF 33)

©2020 TILTECO, INC.

TILTECO INC.
TILLIT TESTING & ENGINEERING COMPANY
6355 N.W. 36th. St., Ste. 305, VIRGINIA GARDENS, FLORIDA 33166
Phone : (305)871-1530 . Fax : (305)871-1531
e-mail: tilteco@aol.com
CA-0006719
WALTER A. TILLIT Jr., P.E.
FLORIDA Lic. # 44167

ASSA / BERTHA COLONIAL SHUTTER (WITH CLIPS)

AMERICAN SHUTTER SYSTEMS ASSOC., INC.
4268 WEST ROADS DRIVE
WEST PALM BEACH, FL. 33407
PHONE: (800)432-2204
FAX: (561)209-8380

REV. No	DESCRIPTION	DATE	REV. No	DESCRIPTION	DATE
1	OLD 17-114	7/2/2020	3		
2			4		

M.P
DRAWN BY:

7/2/2020
DATE:

20-167
DRAWING No

SHEET 14 OF 33

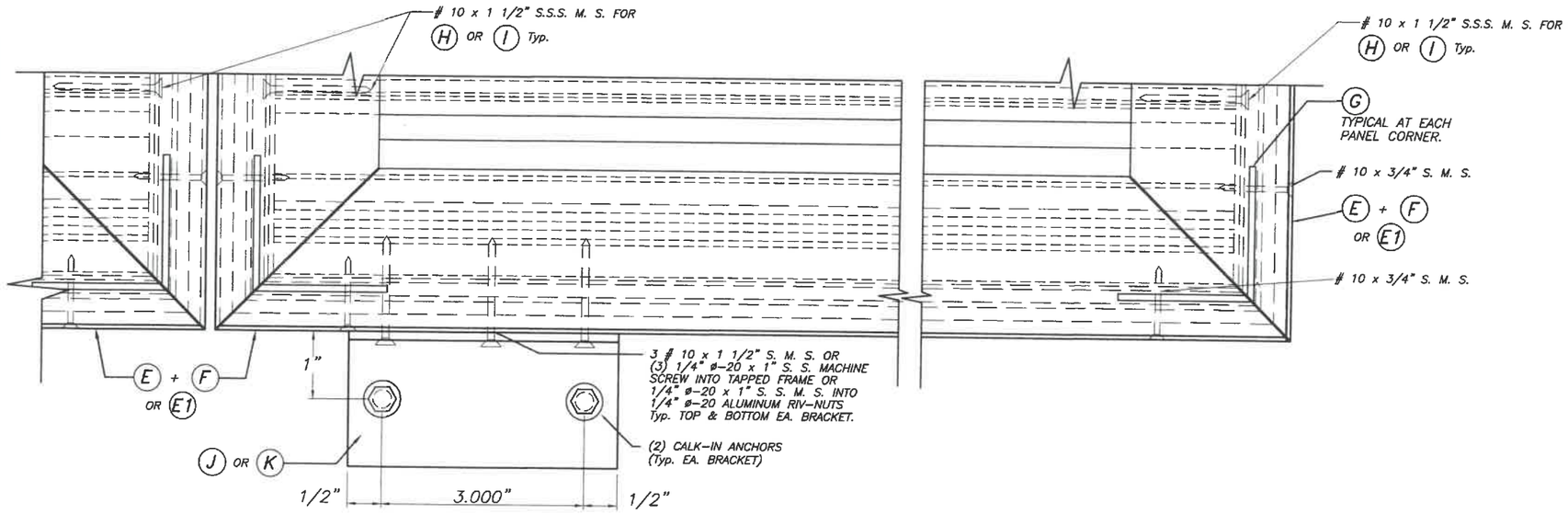

DETAIL 1

SCALE : 1/2" = 1"

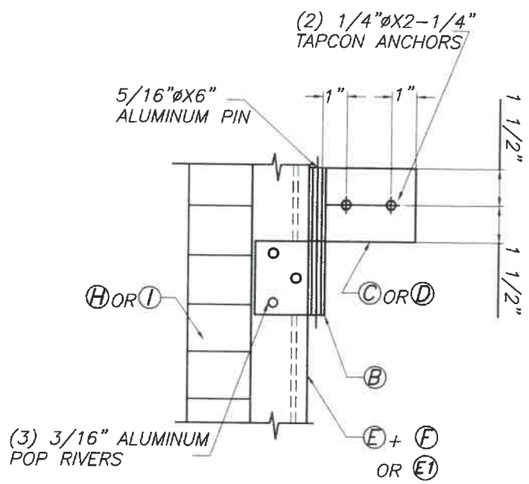

DETAIL 3

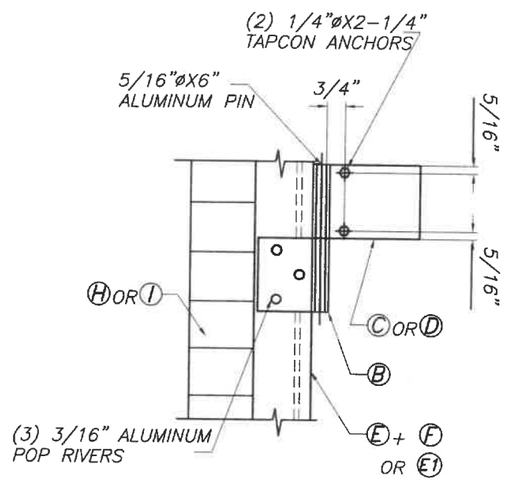

ALTERNATE DETAIL 3

WALTER A. TILLIT JR.
LICENSE
No. 44167
STATE OF
FLORIDA
PROFESSIONAL ENGINEER

7/2/2020

©2020 TILTECO, INC.

TILTECO INC.
TILLIT TESTING & ENGINEERING COMPANY
6355 N.W. 36th. St., Ste. 305, VIRGINIA GARDENS, FLORIDA 33166
Phone : (305)871-1530 . Fax : (305)871-1531
e-mail: tilteco@aol.com
CA-0006719
WALTER A. TILLIT Jr., P.E.
FLORIDA Lic. # 44167

FLORIDA BUILDING CODE (Non High Velocity Hurricane Zone)

COMBINATION DRAWING:
ASSA / EXTRUDED BERTHA BAHAMA SHUTTER (SHEETS 1 THRU 9 OF 33)
ASSA / BERTHA COLONIAL SHUTTER (SHEETS 10 THRU 33 OF 33)

ASSA / BERTHA COLONIAL SHUTTER
(WITH CLIPS)

M.P
DRAWN BY:

AMERICAN SHUTTER SYSTEMS ASSOC., INC.
4268 WEST ROADS DRIVE
WEST PALM BEACH, FL. 33407
PHONE: (800)432-2204
FAX: (561)209-8380

7/2/2020
DATE:

20-167
DRAWING No

REV. No	DESCRIPTION	DATE	REV. No	DESCRIPTION	DATE
1	OLD 17-114	7/2/2020	3		
2			4		

SHEET 15 OF 33

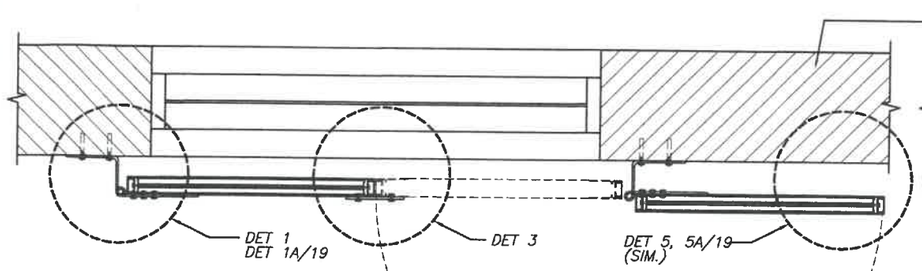

SECTION A – A : DOUBLE PANEL UNIT

N. T. S.

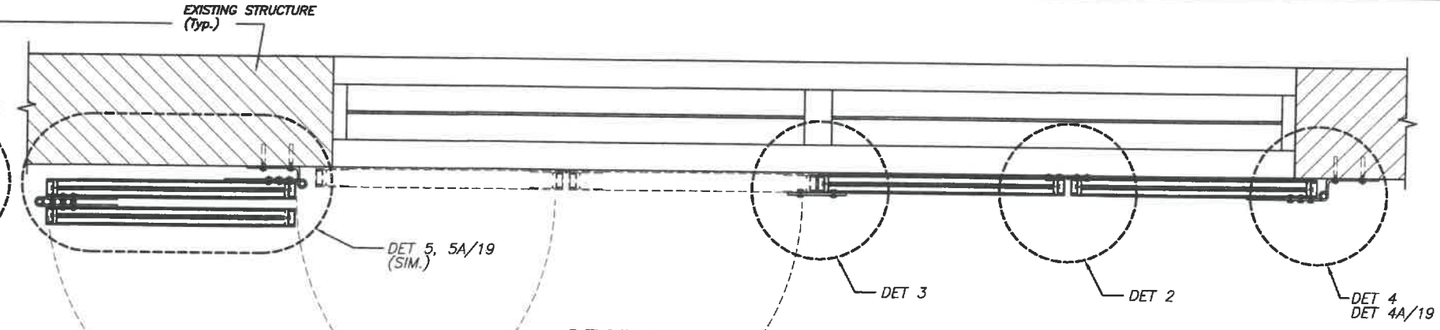

SECTION A1 – A1 : QUADRUPLE PANEL UNIT

N. T. S.

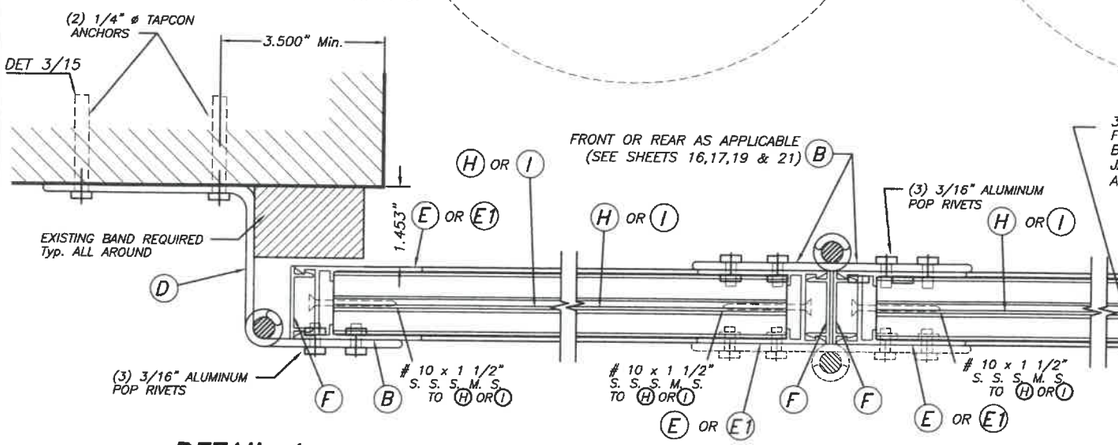

DETAIL 1

(PLAN) SCALE : 3/8" = 1"

DETAIL 2

(PLAN) SCALE : 3/8" = 1"

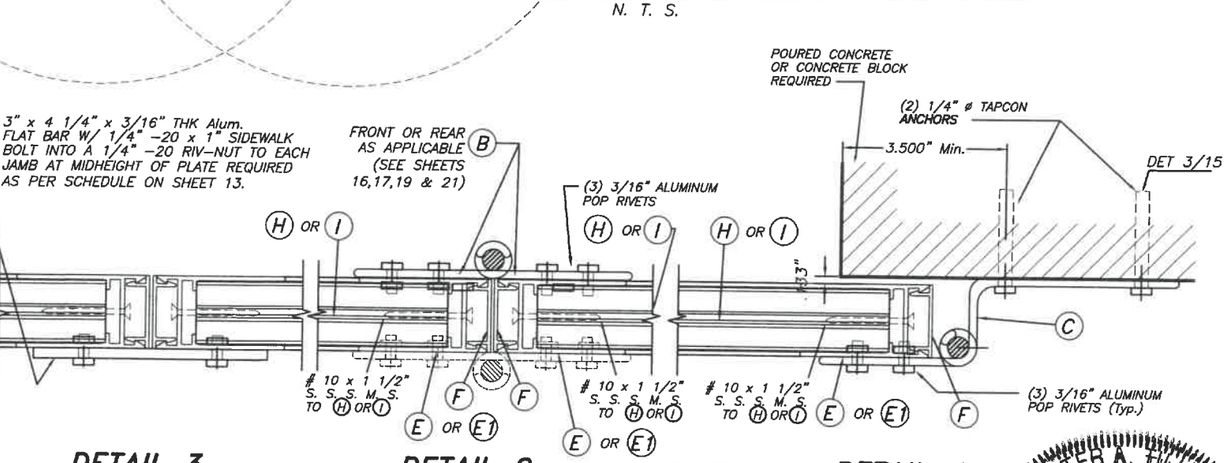

DETAIL 3

(PLAN)

DETAIL 2

(PLAN) SCALE : 3/8" = 1"

DETAIL 4

(PLAN)

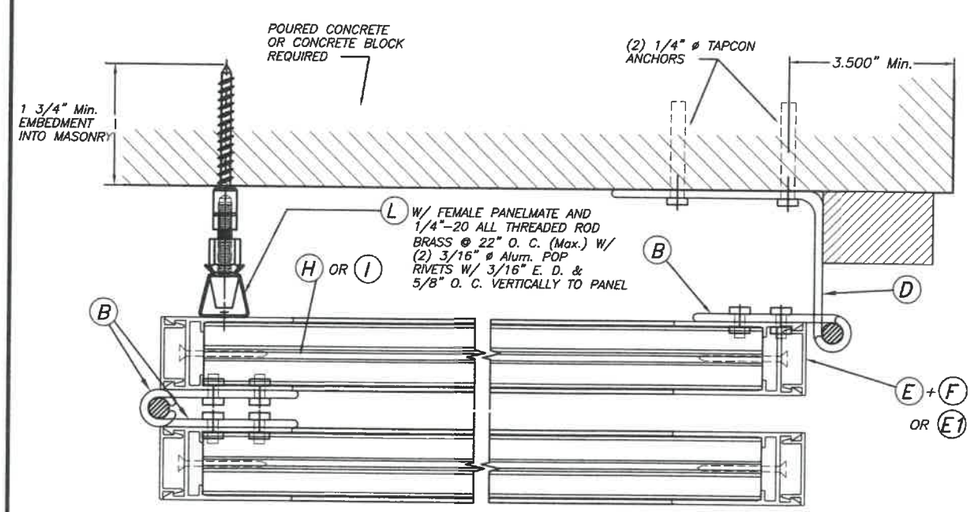

DETAIL 5 : NON HURRICANE POSITION ONLY

(PLAN) SCALE : 3/8" = 1"

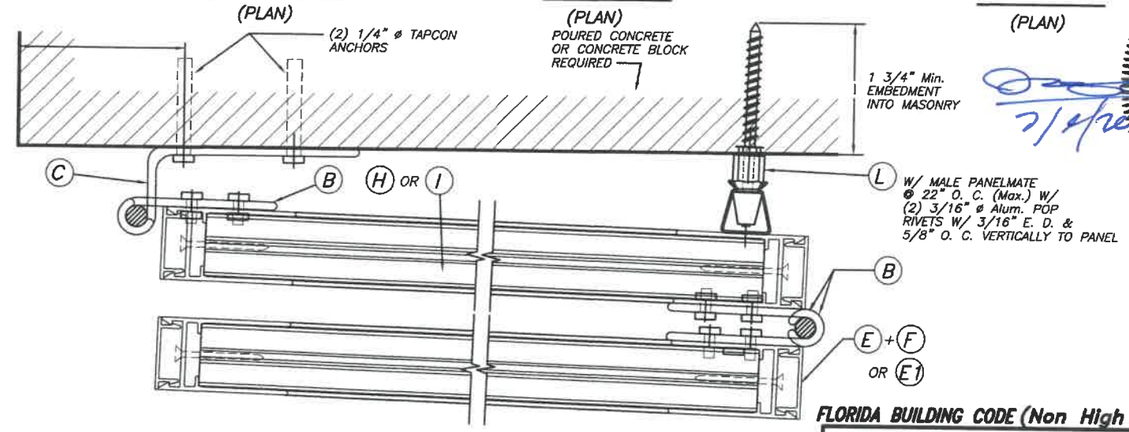

ALTERNATE DETAIL 5 : NON HURRICANE POSITION ONLY

(PLAN) SCALE : 3/8" = 1"

WALTER A. TILLIT JR.
LICENSE
No. 44167
STATE OF
FLORIDA
PROFESSIONAL ENGINEER

7/2/2020

FLORIDA BUILDING CODE (Non High Velocity Hurricane Zone)

COMBINATION DRAWING:
ASSA / EXTRUDED BERTHA BAHAMA SHUTTER (SHEETS 1 THRU 9 OF 33)
ASSA / BERTHA COLONIAL SHUTTER (SHEETS 10 THRU 33 OF 33)

©2020 TILTECO, INC.

TILTECO INC.
TILLIT TESTING & ENGINEERING COMPANY
6355 N.W. 36th. St., Ste. 305, VIRGINIA GARDENS, FLORIDA 33166
Phone : (305)871–1530 . Fax : (305)871–1531
e–mail: tilteco@aol.com
CA–0006719
WALTER A. TILLIT Jr., P.E.
FLORIDA Lic. # 44167

ASSA / BERTHA COLONIAL SHUTTER
(WITH CLIPS)

AMERICAN SHUTTER SYSTEMS ASSOC., INC.
4268 WEST ROADS DRIVE
WEST PALM BEACH, FL. 33407
PHONE: (800)432–2204
FAX: (561)209–8380

M.P
DRAWN BY:

7/2/2020
DATE:

20–167
DRAWING No

SHEET 16 OF 33

REV. No	DESCRIPTION	DATE	REV. No	DESCRIPTION	DATE
1	OLD 17–114	7/2/2020	3		
2			4		

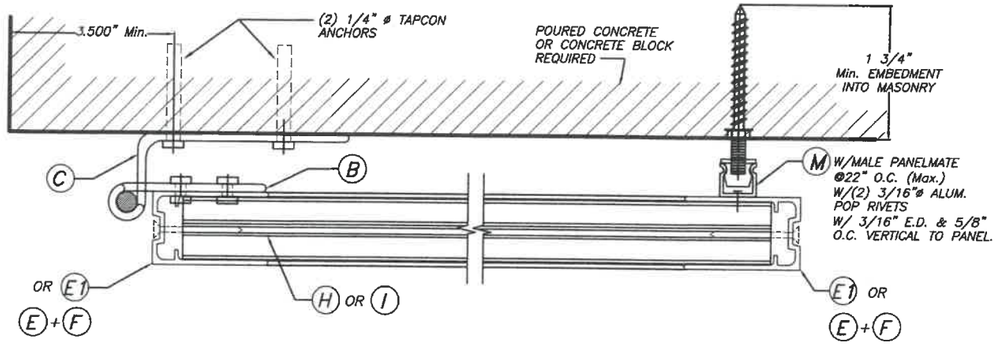

DETAIL 6: NON HURRICANE POSITION ONLY

(PLAN) SCALE : 3/8" = 1"

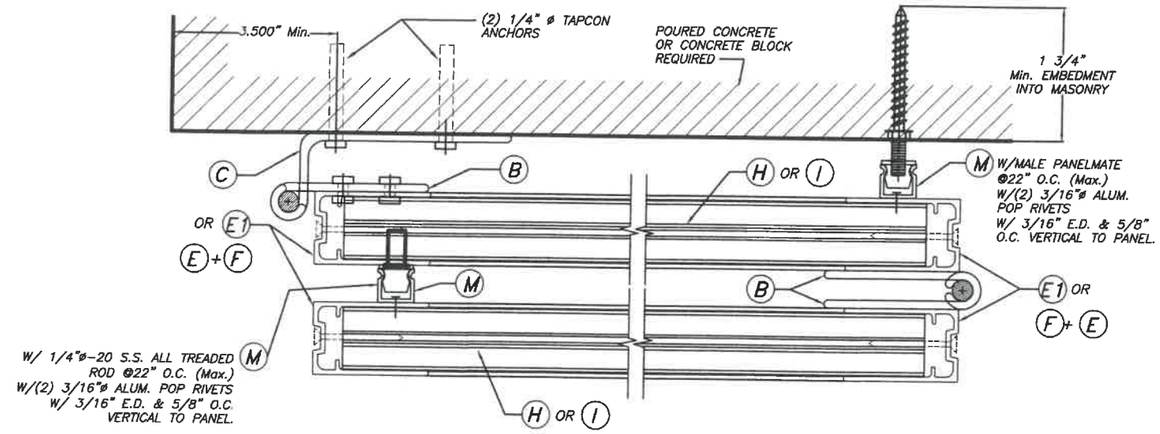

DETAIL 8: NON HURRICANE POSITION ONLY

(PLAN) SCALE : 3/8" = 1"

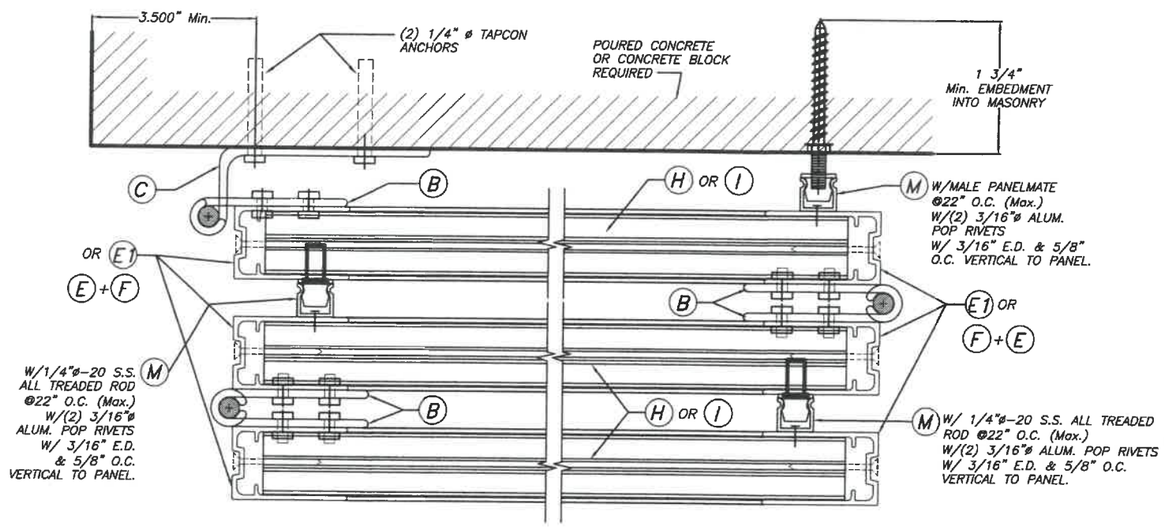

DETAIL 7: NON HURRICANE POSITION ONLY FOR INSTALLATION AT QUADRUPLE PANEL ONLY (W/ B (Max.) = 18")

(PLAN) SCALE : 3/8" = 1"

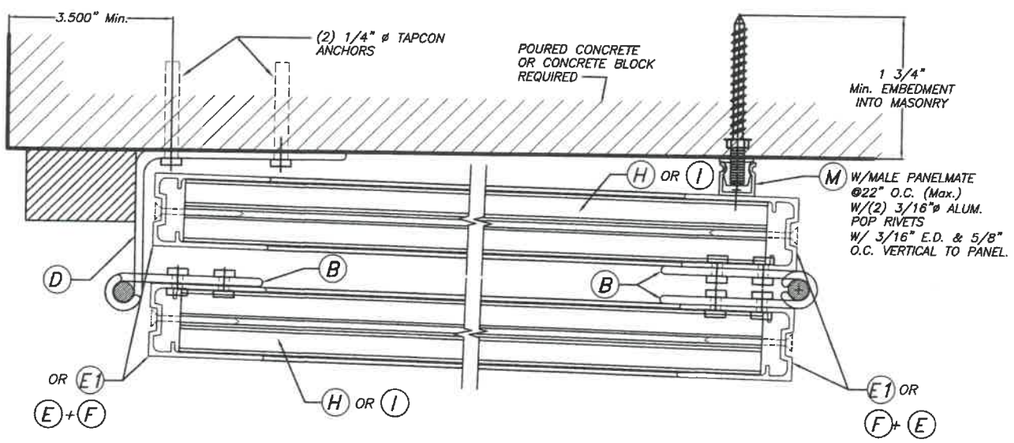

ALTERNATE DETAIL 8: NON HURRICANE POSITION ONLY

(PLAN) SCALE : 3/8" = 1"

WALTER A. TILLIT JR. LICENSE No. 44167 STATE OF FLORIDA PROFESSIONAL ENGINEER

7/2/2020

©2020 TILTECO, INC.

TILTECO INC.
TILLIT TESTING & ENGINEERING COMPANY
6355 N.W. 36th. St., Ste. 305, VIRGINIA GARDENS, FLORIDA 33166
Phone : (305)871-1530 . Fax : (305)871-1531
e-mail: tilteco@aol.com
CA-0006719
WALTER A. TILLIT Jr., P.E.
FLORIDA Lic. # 44167

FLORIDA BUILDING CODE (Non High Velocity Hurricane Zone)

COMBINATION DRAWING:
ASSA / EXTRUDED BERTHA BAHAMA SHUTTER (SHEETS 1 THRU 9 OF 33)
ASSA / BERTHA COLONIAL SHUTTER (SHEETS 10 THRU 33 OF 33)

ASSA / BERTHA COLONIAL SHUTTER (WITH CLIPS)

M.P
DRAWN BY:

AMERICAN SHUTTER SYSTEMS ASSOC., INC.
4268 WEST ROADS DRIVE
WEST PALM BEACH, FL. 33407
PHONE: (800)432-2204
FAX: (561)209-8380

7/2/2020
DATE:

20-167
DRAWING No

REV. No	DESCRIPTION	DATE	REV. No	DESCRIPTION	DATE
1	OLD 17-114	7/2/2020	3		
2			4		

SHEET 17 OF 33

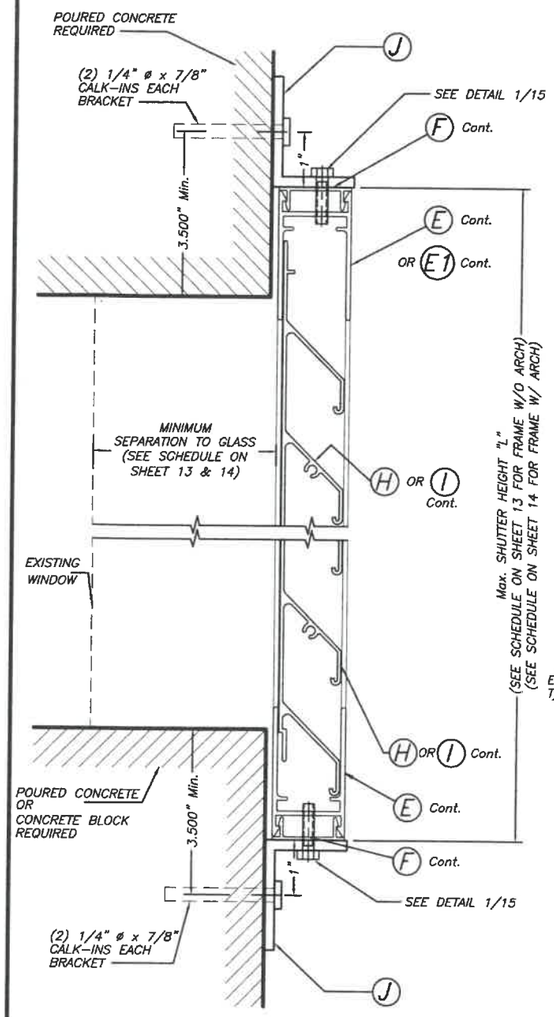

SECTION B – B (FLUSH MOUNT)

HURRICANE POSITION
SCALE: 3/8" = 1"

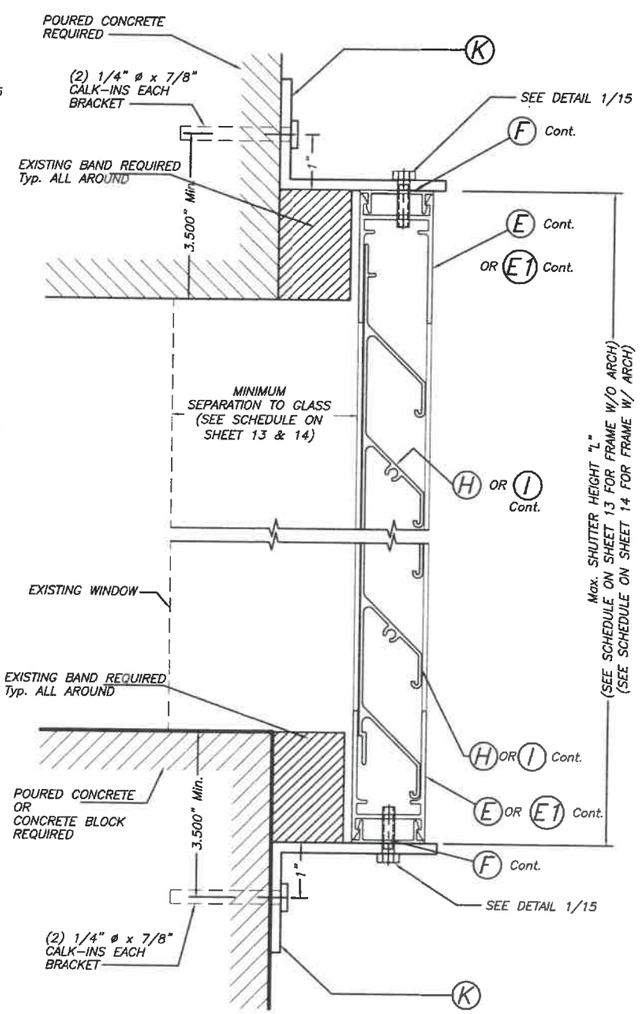

SECTION C – C (BUILD-OUT)

HURRICANE POSITION
SCALE: 3/8" = 1"

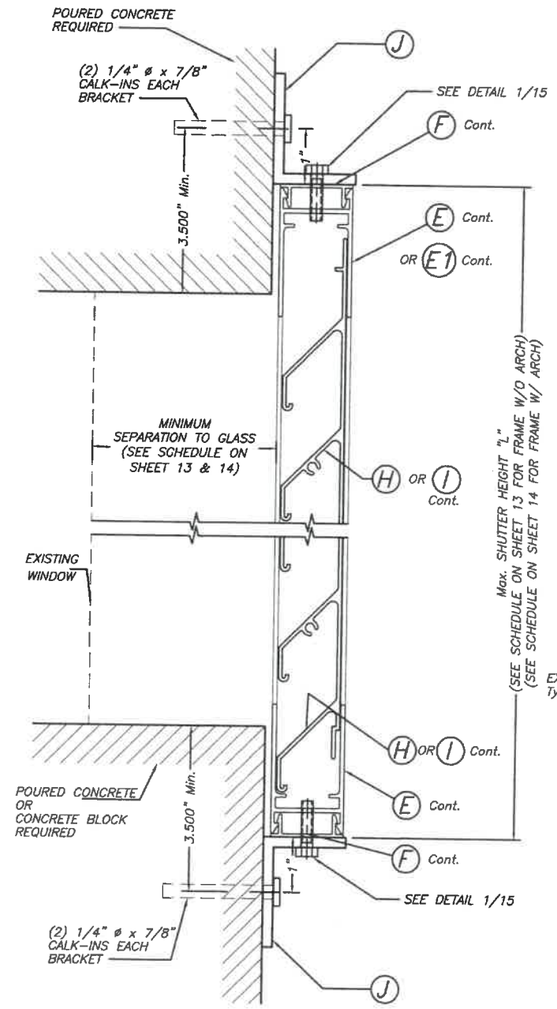

SECTION D – D (FLUSH MOUNT)

SHUTTER BLADE REVERSELY ORIENTED
HURRICANE POSITION
SCALE: 3/8" = 1"

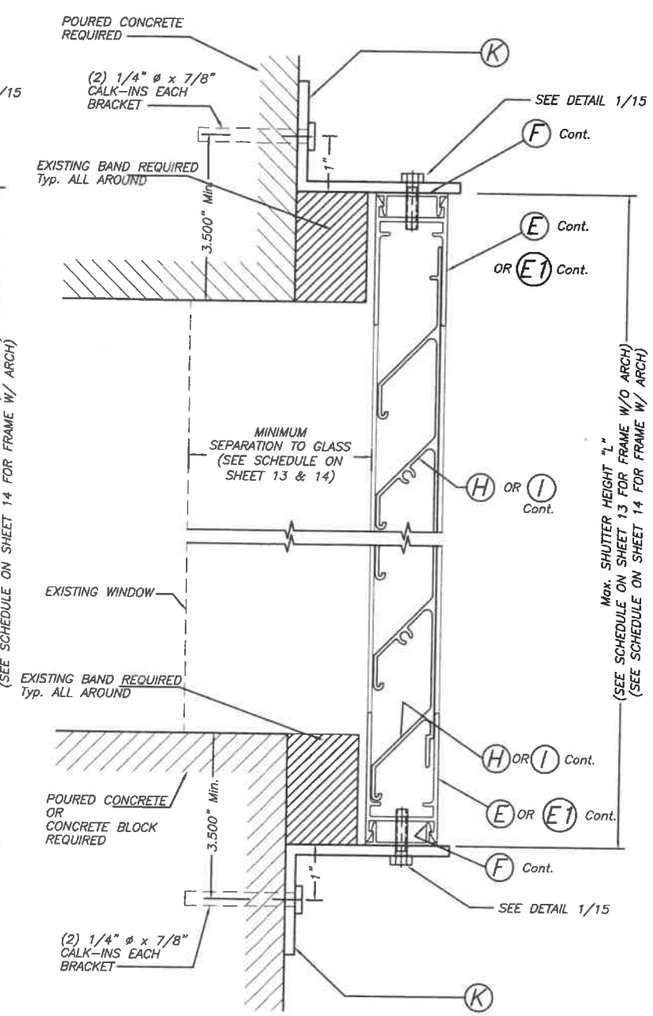

SECTION E – E (BUILD-OUT)

SHUTTER BLADE REVERSELY ORIENTED
HURRICANE POSITION
SCALE: 3/8" = 1"

FLORIDA BUILDING CODE (Non High Velocity Hurricane Zone)

COMBINATION DRAWING:
ASSA / EXTRUDED BERTHA BAHAMA SHUTTER (SHEETS 1 THRU 9 OF 33)
ASSA / BERTHA COLONIAL SHUTTER (SHEETS 10 THRU 33 OF 33)

WALTER A. TILLIT JR. LICENSE No. 44167 STATE OF FLORIDA PROFESSIONAL ENGINEER

7/2/2020

©2020 TILTECO, INC.

TILTECO INC.
TILLIT TESTING & ENGINEERING COMPANY
6355 N.W. 36th. St., Ste. 305, VIRGINIA GARDENS, FLORIDA 33166
Phone : (305)871-1530 . Fax : (305)871-1531
e-mail: tilteco@aol.com
CA-0006719
WALTER A. TILLIT Jr., P.E.
FLORIDA Lic. # 44167

ASSA / BERTHA COLONIAL SHUTTER (WITH CLIPS)

AMERICAN SHUTTER SYSTEMS ASSOC., INC.
4268 WEST ROADS DRIVE
WEST PALM BEACH, FL. 33407
PHONE: (800)432-2204
FAX: (561)209-8380

REV. No	DESCRIPTION	DATE	REV. No	DESCRIPTION	DATE
1	OLD 17-114	7/2/2020	3		
2			4		

M.P
DRAWN BY:

7/2/2020
DATE:

20-167
DRAWING No

SHEET 18 OF 33

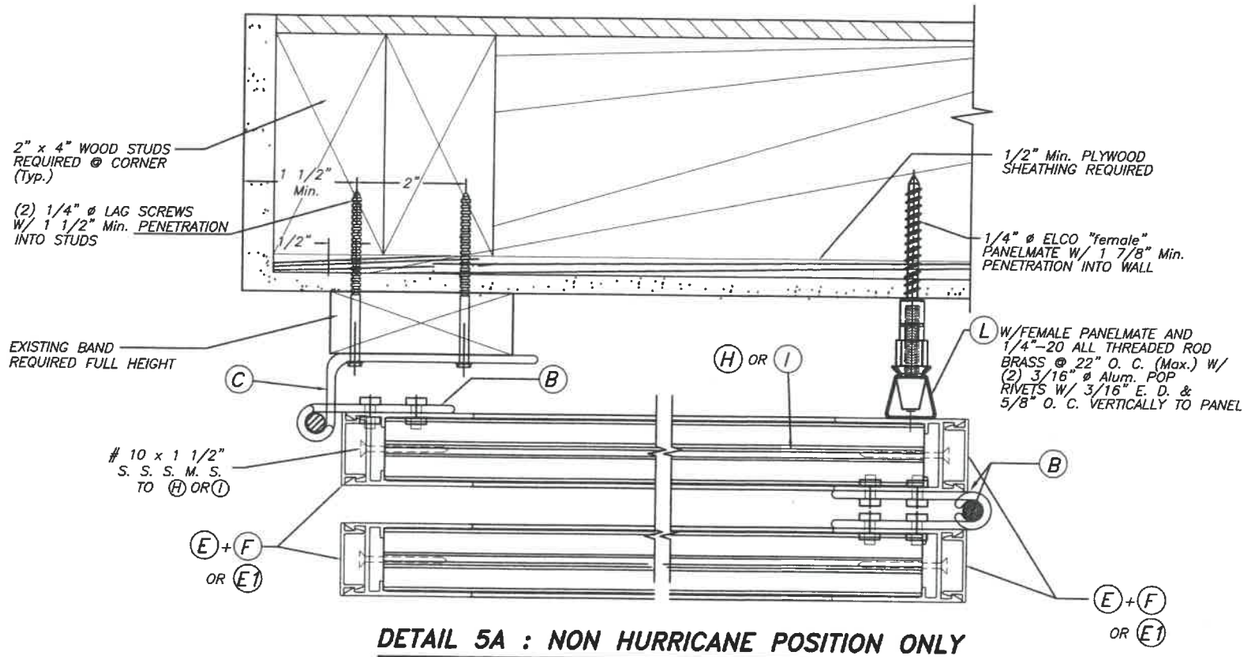

DETAIL 5A : NON HURRICANE POSITION ONLY

(PLAN) SCALE : 1/4" = 1"

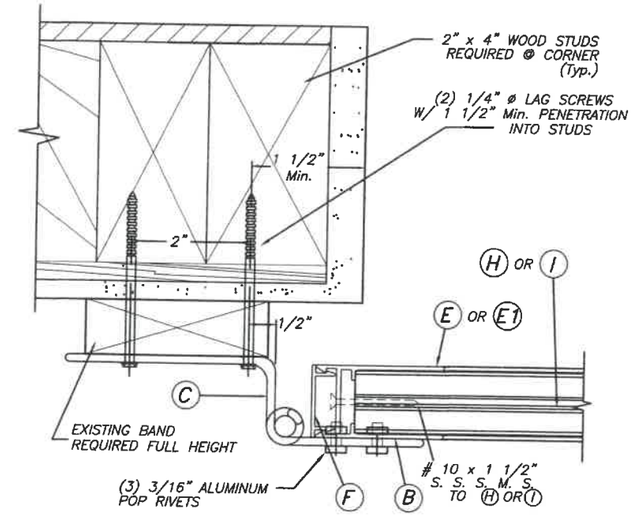

DETAIL 1A

(PLAN) SCALE : 1/4" = 1"

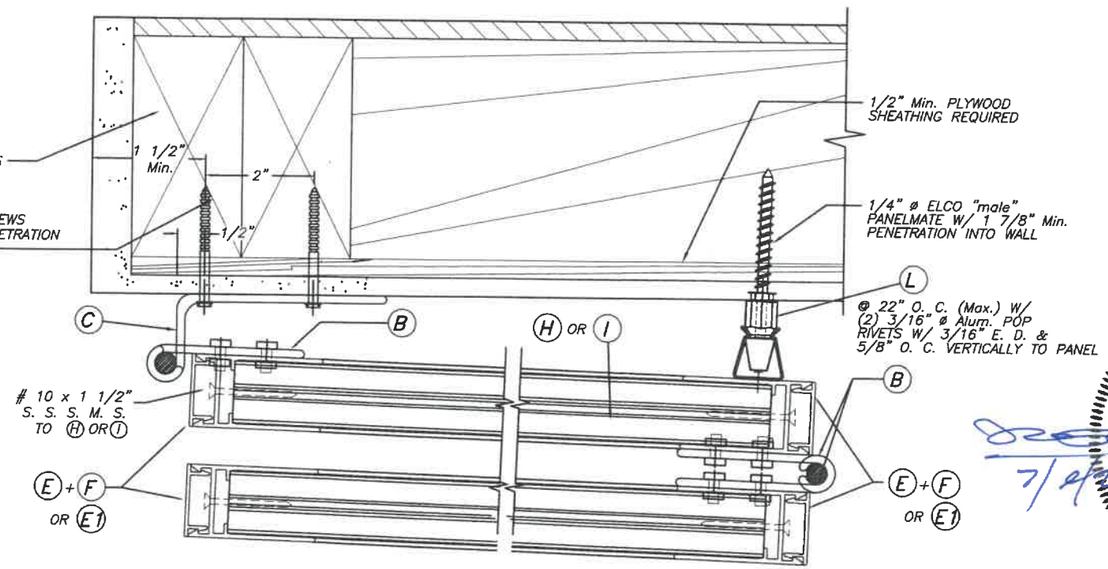

ALTERNATE DETAIL 5A : NON HURRICANE POSITION ONLY

(PLAN) SCALE : 1/4" = 1"

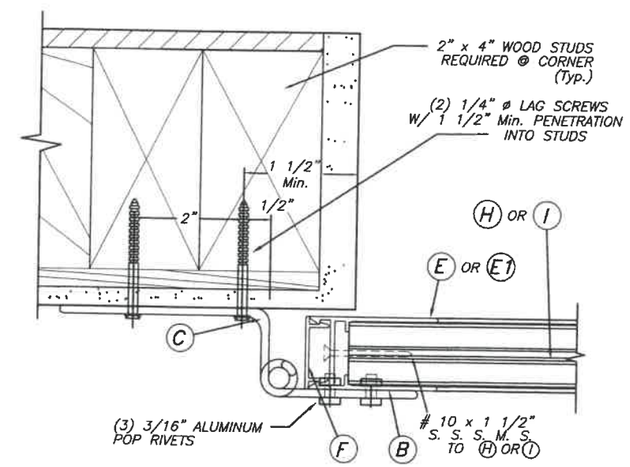

DETAIL 4A

(PLAN)

INSTALLATION DETAILS ON EXISTING WOOD FRAME BUILDINGS

WALTER A. TILLIT JR. LICENSE No. 44167 STATE OF FLORIDA PROFESSIONAL ENGINEER

7/2/2020

© 2020 TILTECO, INC.

TILTECO INC.
TILLIT TESTING & ENGINEERING COMPANY
6355 N.W. 36th. St., Ste. 305, VIRGINIA GARDENS, FLORIDA 33166
Phone : (305)871-1530 . Fax : (305)871-1531
e-mail: tilteco@aol.com
CA-0006719
WALTER A. TILLIT Jr., P.E.
FLORIDA Lic. # 44167

FLORIDA BUILDING CODE (Non High Velocity Hurricane Zone)

COMBINATION DRAWING:
ASSA / EXTRUDED BERTHA BAHAMA SHUTTER (SHEETS 1 THRU 9 OF 33)
ASSA / BERTHA COLONIAL SHUTTER (SHEETS 10 THRU 33 OF 33)

ASSA / BERTHA COLONIAL SHUTTER (WITH CLIPS)

AMERICAN SHUTTER SYSTEMS ASSOC., INC.
4268 WEST ROADS DRIVE
WEST PALM BEACH, FL. 33407
PHONE: (800)432-2204
FAX: (561)209-8380

M.P DRAWN BY:
7/2/2020 DATE:
20-167 DRAWING No

REV. No	DESCRIPTION	DATE	REV. No	DESCRIPTION	DATE
1	OLD 17-114	7/2/2020	3		
2			4		

SHEET 19 OF 33

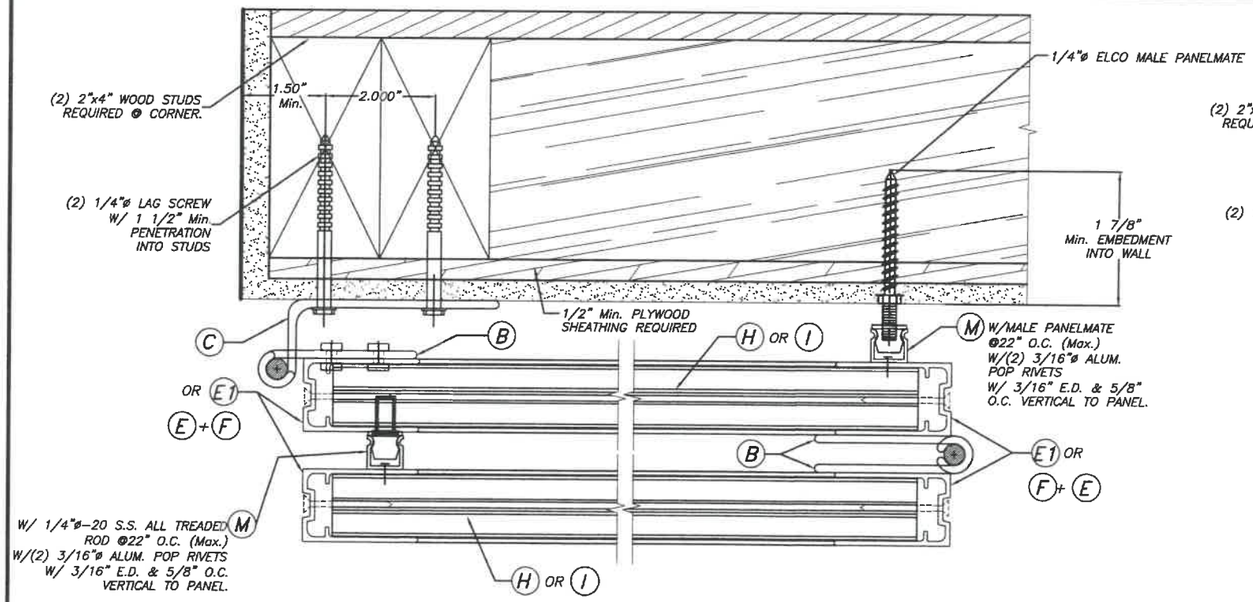

DETAIL 8A: NON HURRICANE POSITION ONLY

(PLAN) SCALE : 3/8" = 1"

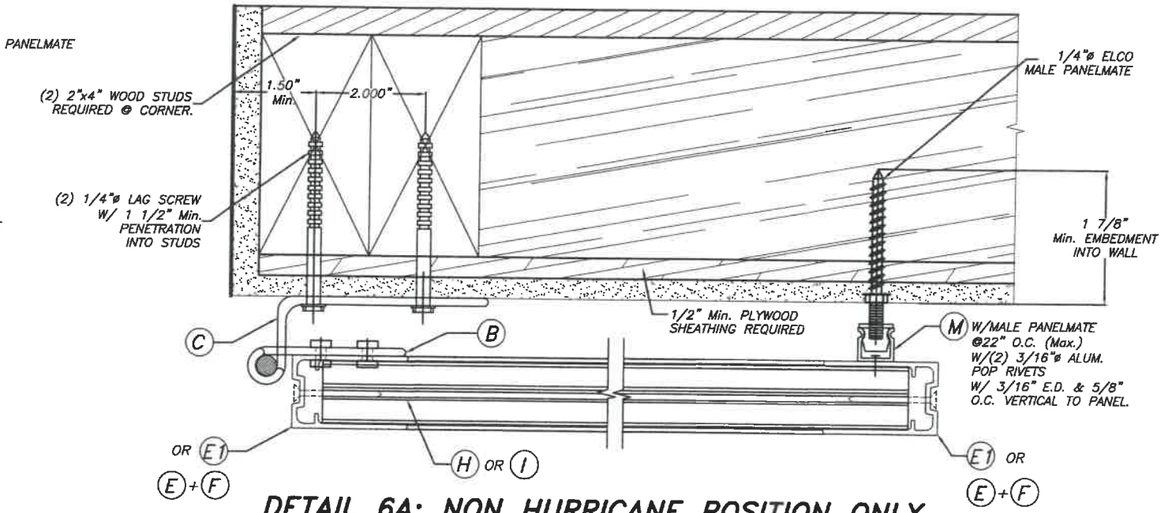

DETAIL 6A: NON HURRICANE POSITION ONLY

(PLAN) SCALE : 3/8" = 1"

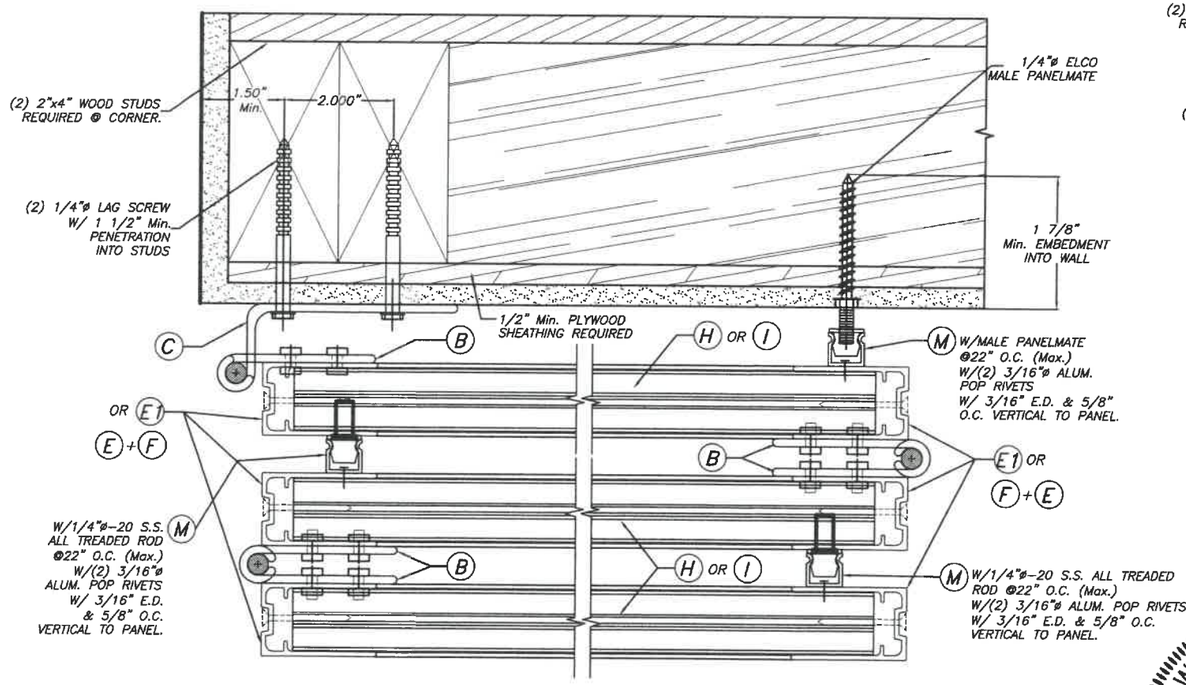

DETAIL 7A: NON HURRICANE POSITION ONLY

(PLAN) SCALE : 3/8" = 1"

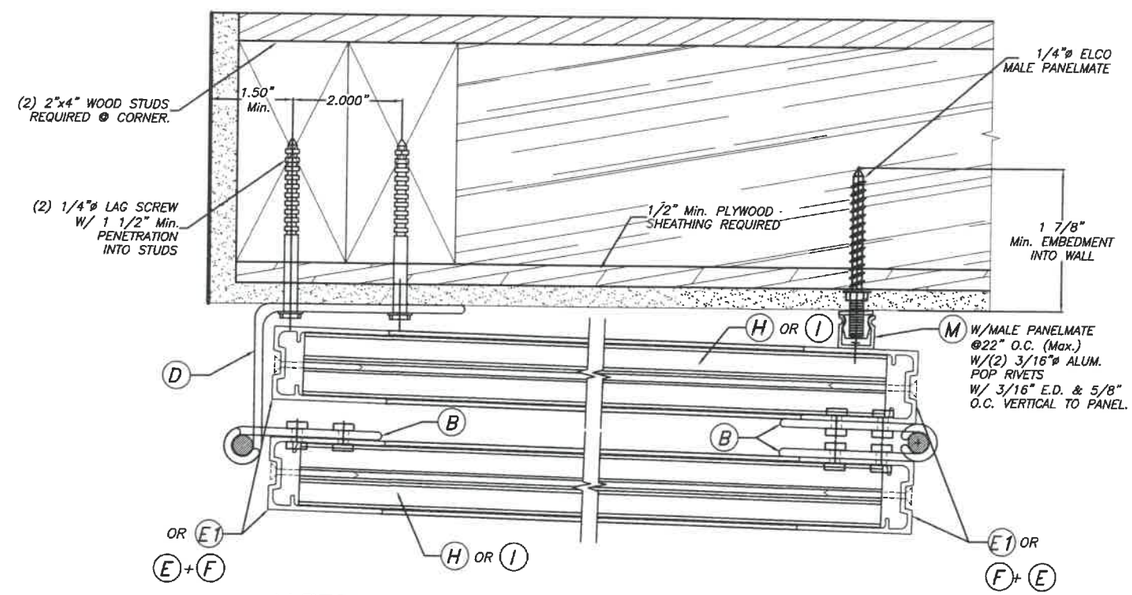

ALTERNATE DETAIL 8A: NON HURRICANE POSITION ONLY

(PLAN) SCALE : 3/8" = 1"

WALTER A. TILLIT JR. LICENSE No. 44167 STATE OF FLORIDA PROFESSIONAL ENGINEER

7/2/2020

FLORIDA BUILDING CODE (Non High Velocity Hurricane Zone)

COMBINATION DRAWING:
ASSA / EXTRUDED BERTHA BAHAMA SHUTTER (SHEETS 1 THRU 9 OF 33)
ASSA / BERTHA COLONIAL SHUTTER (SHEETS 10 THRU 33 OF 33)

©2020 TILTECO, INC.

TILTECO INC.
TILLIT TESTING & ENGINEERING COMPANY
6355 N.W. 36th. St., Ste. 305, VIRGINIA GARDENS, FLORIDA 33166
Phone : (305)871-1530 . Fax : (305)871-1531
e-mail: tilteco@aol.com
CA-0006719
WALTER A. TILLIT Jr., P.E.
FLORIDA Lic. # 44167

ASSA / BERTHA COLONIAL SHUTTER (WITH CLIPS)

AMERICAN SHUTTER SYSTEMS ASSOC., INC.
4268 WEST ROADS DRIVE
WEST PALM BEACH, FL. 33407
PHONE: (800)432-2204
FAX: (561)209-8380

REV. No	DESCRIPTION	DATE	REV. No	DESCRIPTION	DATE
1	OLD 17-114	7/2/2020	3		
2			4		

M.P
DRAWN BY:

7/2/2020
DATE:

20-167
DRAWING No

SHEET 20 OF 33

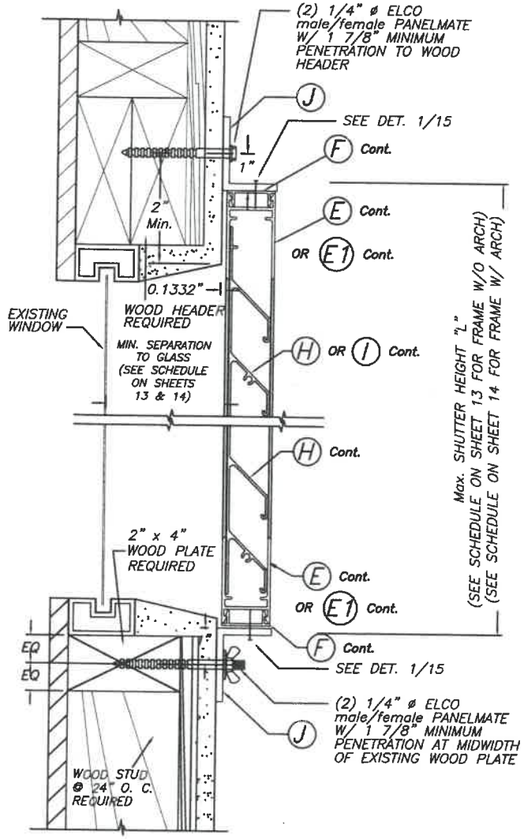

SECTION B' – B' (FLUSH MOUNT)

HURRICANE POSITION

SCALE: 1/4" = 1"

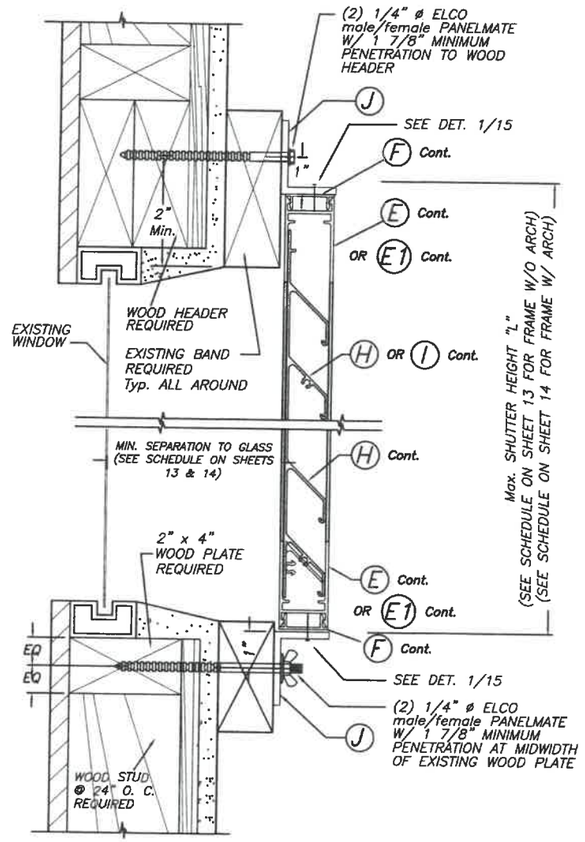

SECTION C' – C' (BUILD-OUT MOUNT)

HURRICANE POSITION

SCALE: 1/4" = 1"

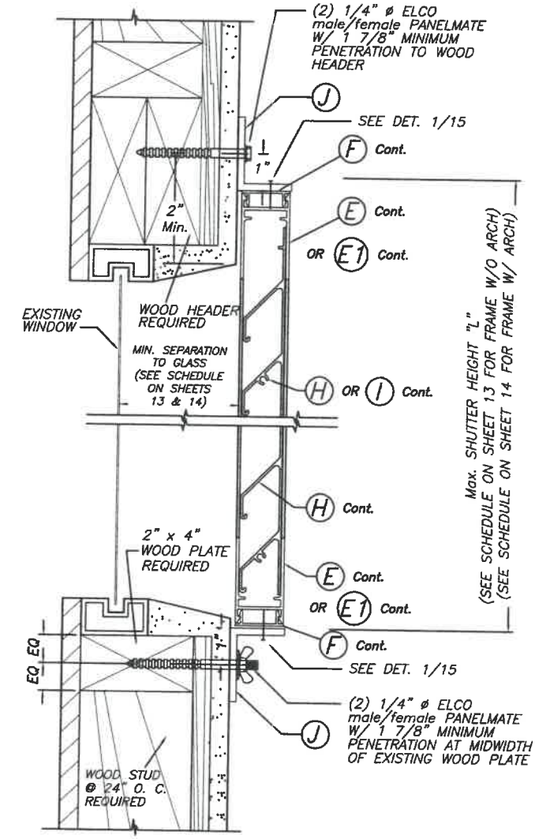

SECTION D' – D' (FLUSH MOUNT)

SHUTTER BLADE REVERSELY ORIENTED

HURRICANE POSITION

SCALE: 1/4" = 1"

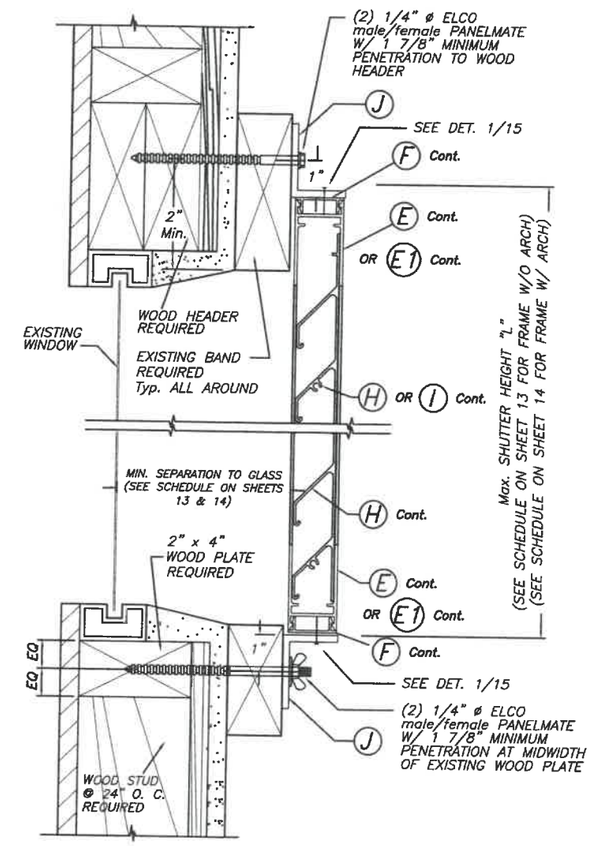

SECTION E' – E' (BUILD-OUT MOUNT)

SHUTTER BLADE REVERSELY ORIENTED

HURRICANE POSITION

SCALE: 1/4" = 1"

WALTER A. TILLIT JR. LICENSE No. 44167 STATE OF FLORIDA PROFESSIONAL ENGINEER

7/2/2020

©2020 TILTECO, INC.

TILTECO INC.
TILLIT TESTING & ENGINEERING COMPANY
6355 N.W. 36th. St., Ste. 305, VIRGINIA GARDENS, FLORIDA 33166
Phone : (305)871-1530 . Fax : (305)871-1531
e-mail: tilteco@aol.com
CA-0006719
WALTER A. TILLIT Jr., P.E.
FLORIDA Lic. # 44167

FLORIDA BUILDING CODE (Non High Velocity Hurricane Zone)

COMBINATION DRAWING:
ASSA / EXTRUDED BERTHA BAHAMA SHUTTER (SHEETS 1 THRU 9 OF 33)
ASSA / BERTHA COLONIAL SHUTTER (SHEETS 10 THRU 33 OF 33)

ASSA / BERTHA COLONIAL SHUTTER (WITH CLIPS)

AMERICAN SHUTTER SYSTEMS ASSOC., INC.
4268 WEST ROADS DRIVE
WEST PALM BEACH, FL. 33407
PHONE: (800)432-2204
FAX: (561)209-8380

REV. No	DESCRIPTION	DATE	REV. No	DESCRIPTION	DATE
1	OLD 17-114	7/2/2020	3		
2			4		

M.P
DRAWN BY:

7/2/2020
DATE:

20-167
DRAWING No

SHEET 21 OF 33

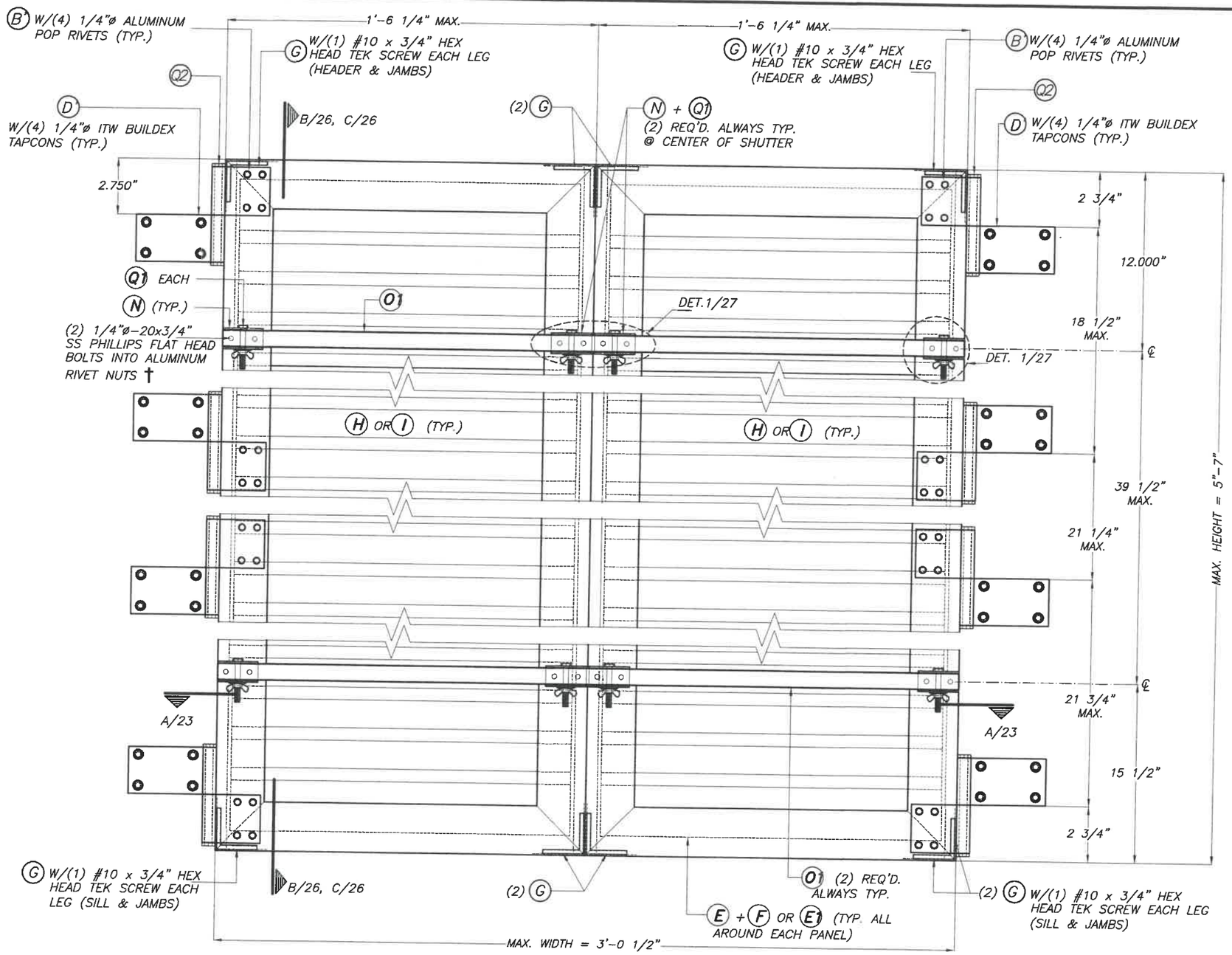

†: 1/4"ø-20x3/4", AS DISTRIBUTED BY ALL POINT SCREW, BOLT AND SPECIALITY CO. (PART # 25CRFNA)

TYPICAL EXTERIOR ELEV. DOUBLE PANEL (HURRICANE POSITION)

SCALE: 3/16"=1"

MAXIMUM A.S.D. DESIGN PRESSURE RATING = +60.0, -81.0 p.s.f. FOR INSTALLATION INTO CONCRETE OR CONCRETE BLOCK WALL SUBSTRATE.

WALTER A. TILLIT JR. LICENSE No. 44167 STATE OF FLORIDA PROFESSIONAL ENGINEER

FLORIDA BUILDING CODE (Non High Velocity Hurricane Zone)

COMBINATION DRAWING:
ASSA / EXTRUDED BERTHA BAHAMA SHUTTER (SHEETS 1 THRU 9 OF 33)
ASSA / BERTHA COLONIAL SHUTTER (SHEETS 10 THRU 33 OF 33)

©2020 TILTECO, INC.

TILTECO INC.
TILLIT TESTING & ENGINEERING COMPANY
6355 N.W. 36th. St., Ste. 305, VIRGINIA GARDENS, FLORIDA 33166
Phone : (305)871-1530 . Fax : (305)871-1531
e-mail: tilteco@aol.com
CA-0006719
WALTER A. TILLIT Jr., P.E.
FLORIDA Lic. # 44167

ASSA / BERTHA COLONIAL SHUTTER (WITH STORM BARS)

AMERICAN SHUTTER SYSTEMS ASSOC., INC.
4268 WEST ROADS DRIVE
WEST PALM BEACH, FL. 33407
PHONE: (800)432-2204
FAX: (561)209-8380

REV. No	DESCRIPTION	DATE	REV. No	DESCRIPTION	DATE
1	OLD 17-114	7/2/2020	3		
2			4		

DRAWN BY: M.P
DATE: 7/2/2020
DRAWING No 20-167
SHEET 22 OF 33

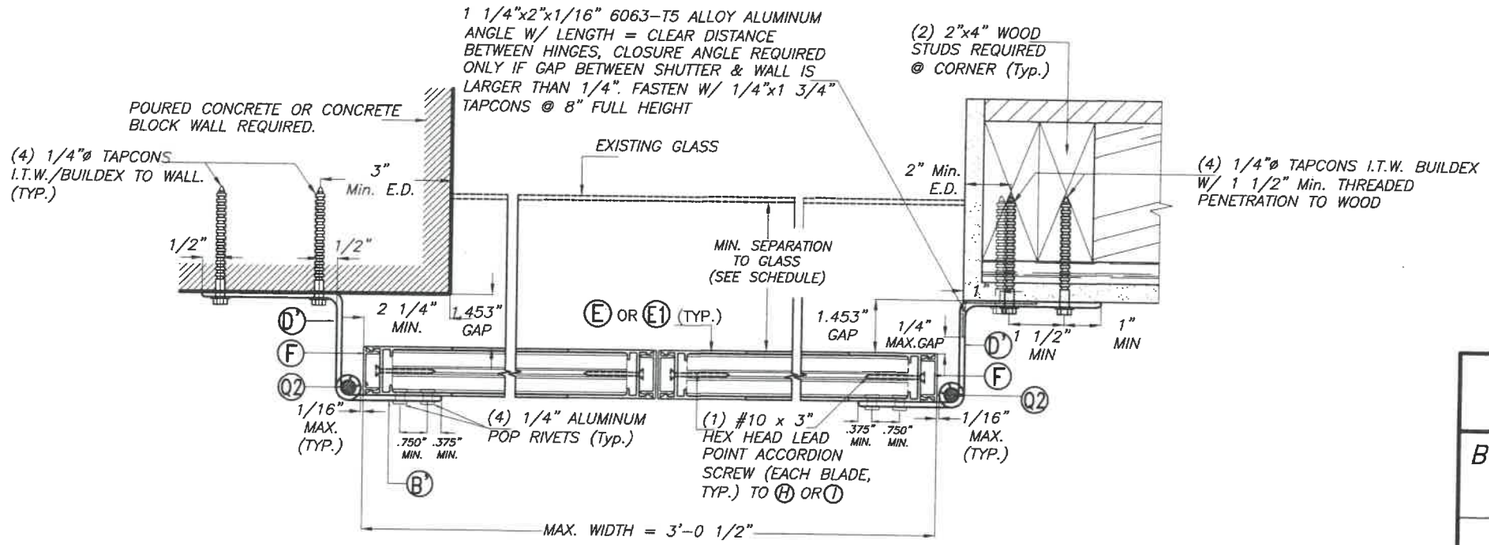

1

SECTION A-A

SCALE 1/4"=1"

MINIMUM SEPARATION TO GLASS		
BLADE TYPE H, I	DOUBLE PANEL	QUADRUPLE PANEL
SOLID	1"	1"
PERFORATED	1 3/4"	2 1/8"

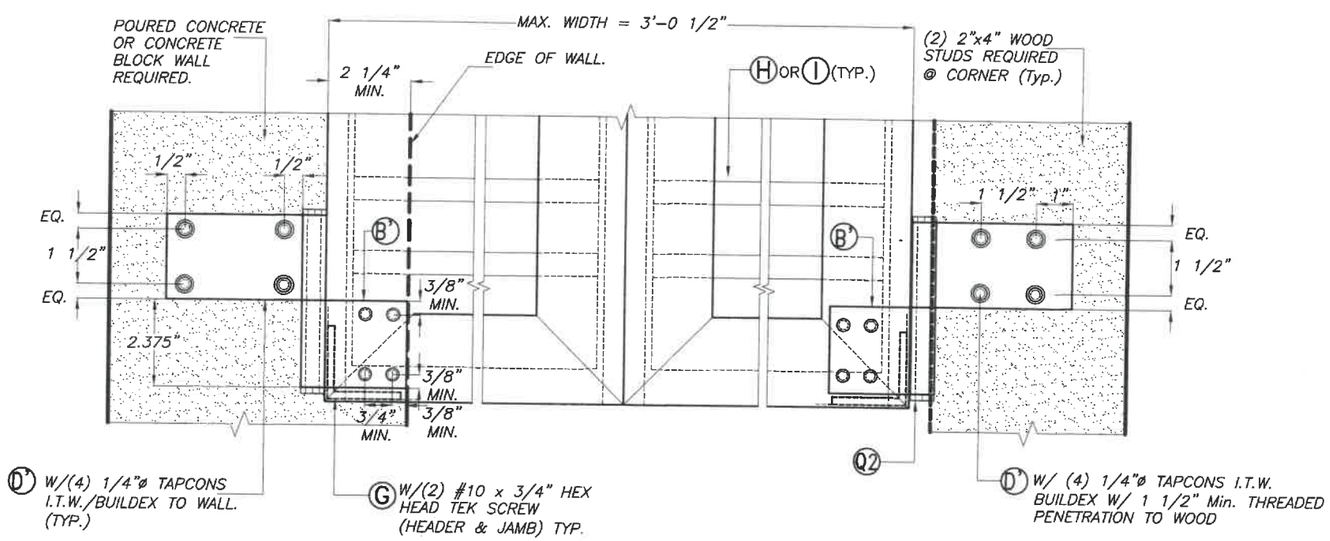

VIEW 1
(PARTIAL ELEVATION AT BOTTOM)

SCALE 1/4"=1"

WALTER A. TILLIT JR. LICENSE No. 44167 STATE OF FLORIDA PROFESSIONAL ENGINEER

7/2/20

FLORIDA BUILDING CODE (Non High Velocity Hurricane Zone)

COMBINATION DRAWING:
ASSA / EXTRUDED BERTHA BAHAMA SHUTTER (SHEETS 1 THRU 9 OF 33)
ASSA / BERTHA COLONIAL SHUTTER (SHEETS 10 THRU 33 OF 33)

© 2020 TILTECO, INC.

TILTECO INC.
TILLIT TESTING & ENGINEERING COMPANY
6355 N.W. 36th. St., Ste. 305, VIRGINIA GARDENS, FLORIDA 33166
Phone : (305)871-1530 . Fax : (305)871-1531
e-mail: tilteco@aol.com
CA-0006719
WALTER A. TILLIT Jr., P.E.
FLORIDA Lic. # 44167

ASSA / BERTHA COLONIAL SHUTTER (WITH STORM BARS)

AMERICAN SHUTTER SYSTEMS ASSOC., INC.
4268 WEST ROADS DRIVE
WEST PALM BEACH, FL. 33407
PHONE: (800)432-2204
FAX: (561)209-8380

M.P
DRAWN BY:

7/2/2020
DATE:

20-167
DRAWING No

REV. No	DESCRIPTION	DATE	REV. No	DESCRIPTION	DATE
1	OLD 17-114	7/2/2020	3		
2			4		

SHEET 23 OF 33

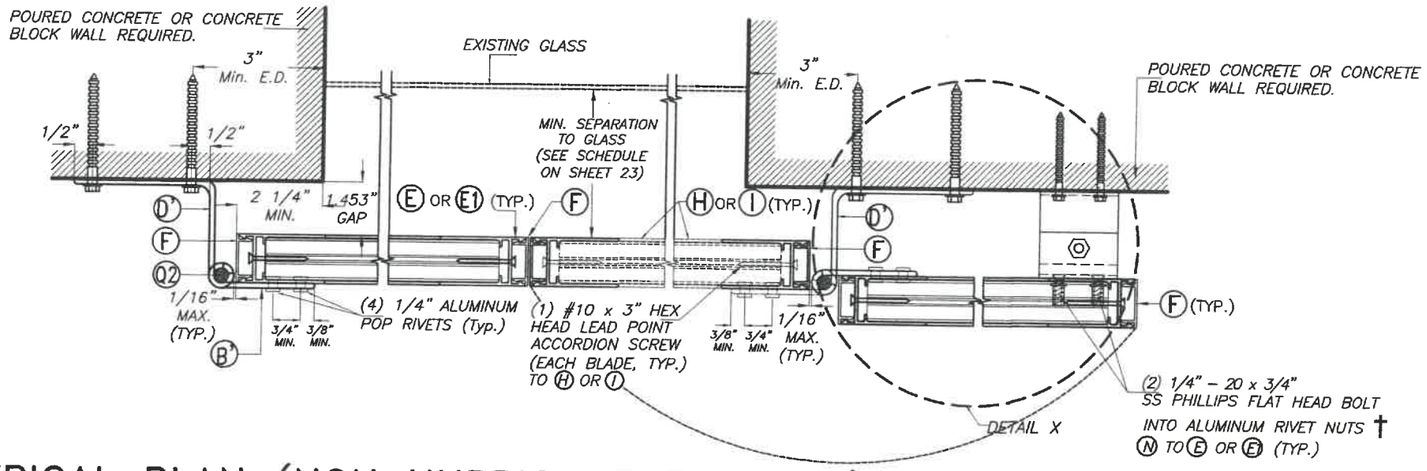

TYPICAL PLAN (NON HURRICANE POSITION)

SCALE 1/4"=1"

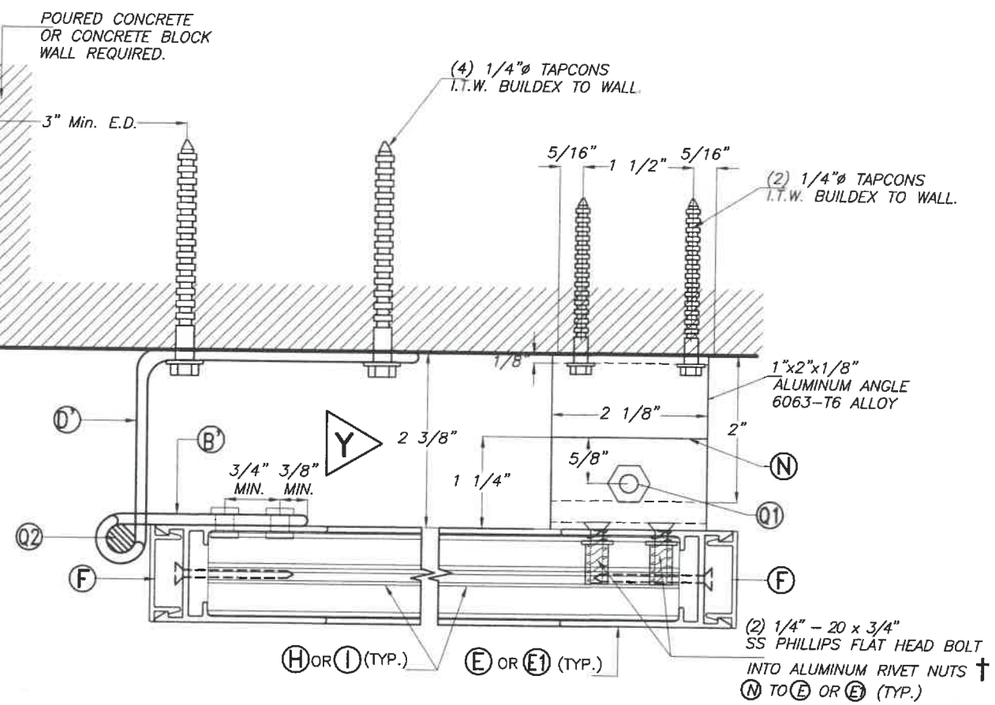

DETAIL X (NON HURRICANE POSITION)

SCALE 1/8"=1"

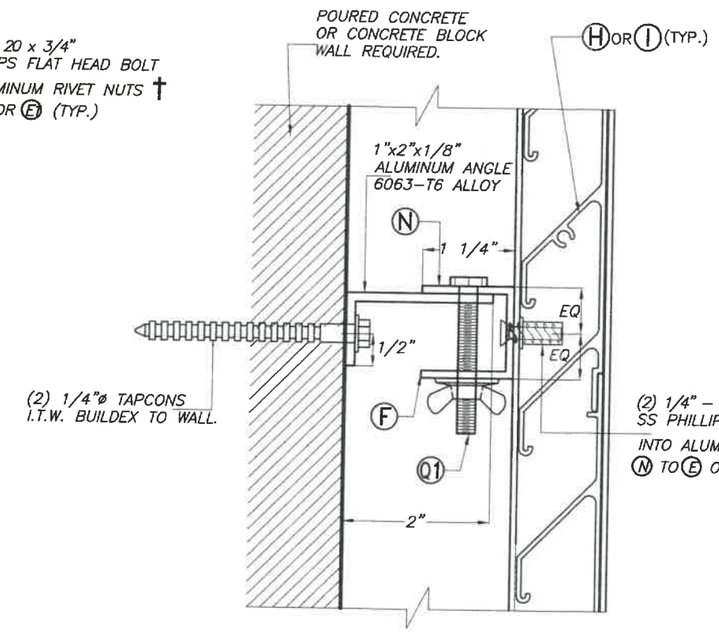

ELEVATION Y–Y

SCALE 1/8"=1"

†: 1/4"ø–20x3/4", AS DISTRIBUTED BY ALL POINT SCREW, BOLT AND SPECIALITY CO. (PART # 25CRFNA)

WALTER A. TILLIT JR. LICENSE No. 44167 STATE OF FLORIDA PROFESSIONAL ENGINEER

FLORIDA BUILDING CODE (Non High Velocity Hurricane Zone)

COMBINATION DRAWING:
ASSA / EXTRUDED BERTHA BAHAMA SHUTTER (SHEETS 1 THRU 9 OF 33)
ASSA / BERTHA COLONIAL SHUTTER (SHEETS 10 THRU 33 OF 33)

©2020 TILTECO, INC.

TILTECO INC.
TILLIT TESTING & ENGINEERING COMPANY
6355 N.W. 36th. St., Ste. 305, VIRGINIA GARDENS, FLORIDA 33166
Phone : (305)871-1530 . Fax : (305)871-1531
e-mail: tilteco@aol.com
CA-0006719
WALTER A. TILLIT Jr., P.E.
FLORIDA Lic. # 44167

ASSA / BERTHA COLONIAL SHUTTER (WITH STORM BARS)

AMERICAN SHUTTER SYSTEMS ASSOC., INC.
4268 WEST ROADS DRIVE
WEST PALM BEACH, FL. 33407
PHONE: (800)432-2204
FAX: (561)209-8380

REV. No	DESCRIPTION	DATE	REV. No	DESCRIPTION	DATE
1	OLD 17-114	7/2/2020	3		
2			4		

M.P
DRAWN BY:

7/2/2020
DATE:

20-167
DRAWING No

SHEET 24 OF 33

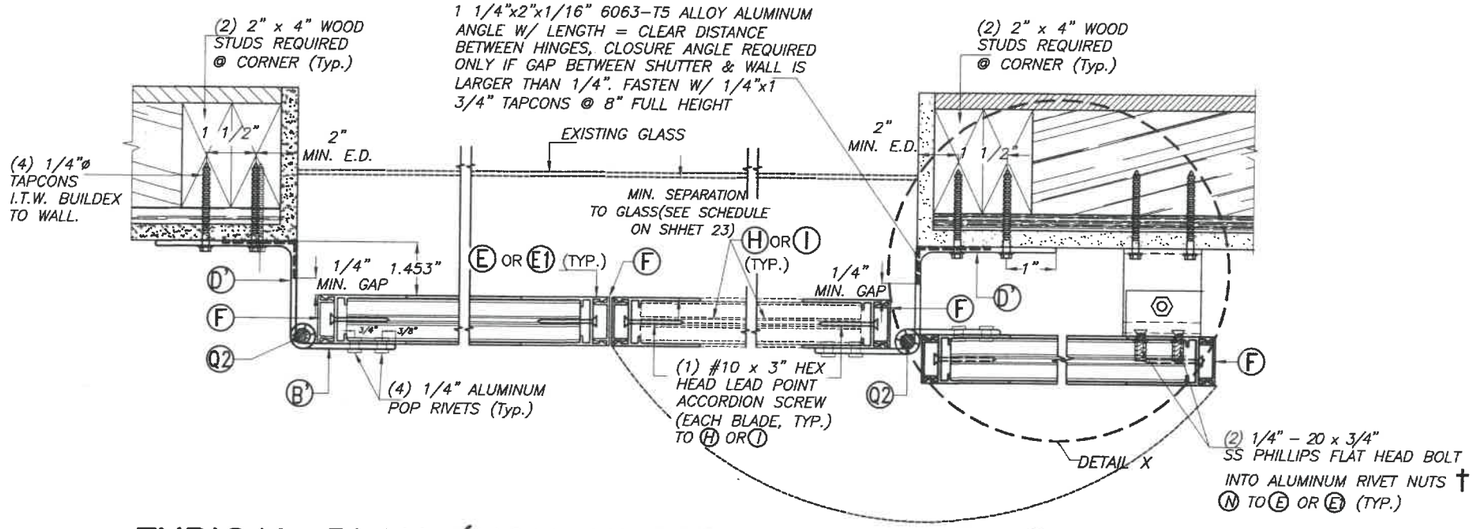

TYPICAL PLAN (NON HURRICANE POSITION)

SCALE 1/4"=1"

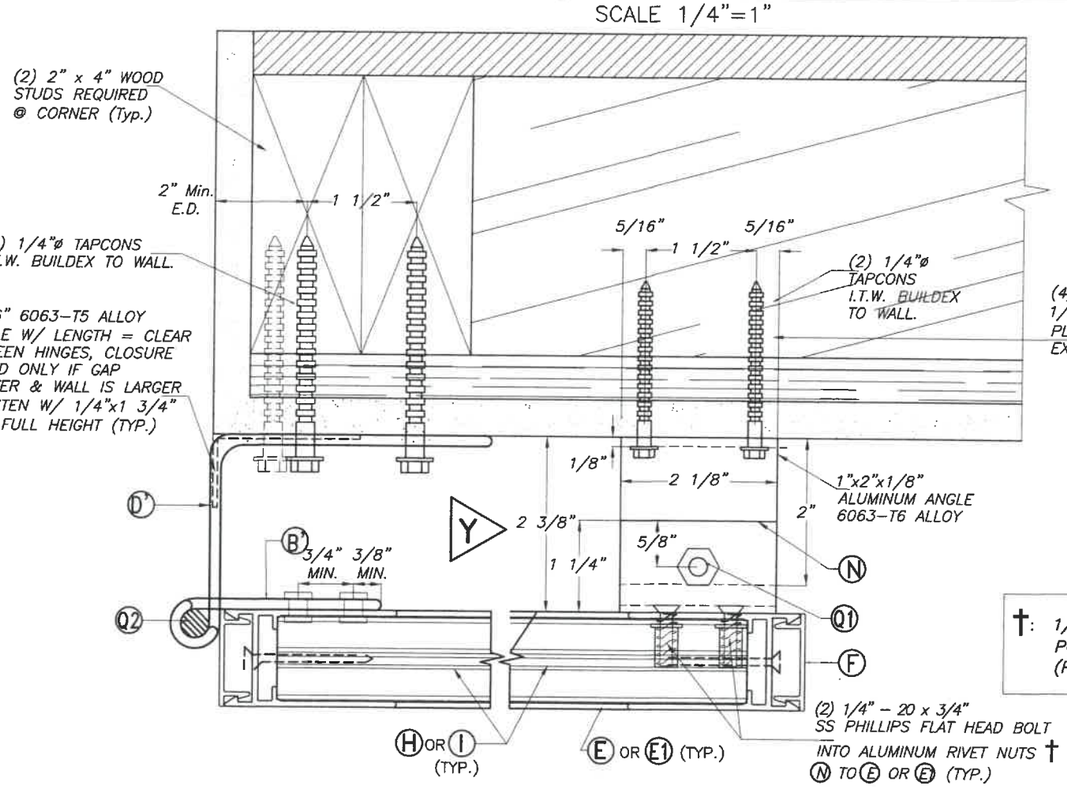

DETAIL X (NON HURRICANE POSITION)

SCALE 1/8"=1"

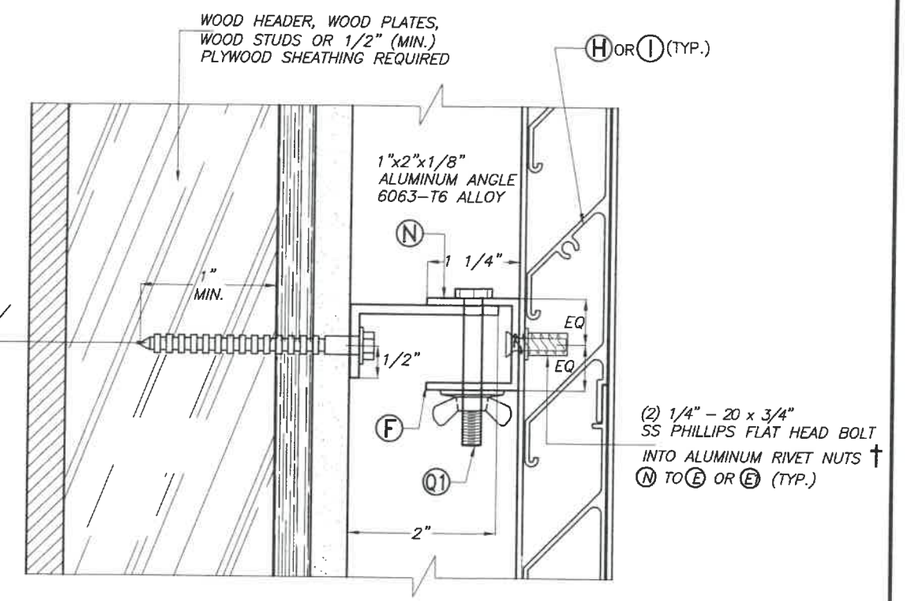

ELEVATION Y-Y

SCALE 1/8"=1"

†: 1/4"ø-20x3/4", AS DISTRIBUTED BY ALL POINT SCREW, BOLT AND SPECIALITY CO. (PART # 25CRFNA)

WALTER A. TILLIT JR. LICENSE No. 44167 STATE OF FLORIDA PROFESSIONAL ENGINEER

7/2/2020

FLORIDA BUILDING CODE (Non High Velocity Hurricane Zone)

COMBINATION DRAWING:
ASSA / EXTRUDED BERTHA BAHAMA SHUTTER (SHEETS 1 THRU 9 OF 33)
ASSA / BERTHA COLONIAL SHUTTER (SHEETS 10 THRU 33 OF 33)

©2020 TILTECO, INC.

TILTECO INC.
TILLIT TESTING & ENGINEERING COMPANY
6562 NW. 36th. St., Ste. 305, VIRGINIA GARDENS, FLORIDA 33166
Phone : (305)871-1530 . Fax : (305)871-1531
e-mail: tilteco@aol.com
CA-0006719
WALTER A. TILLIT Jr., P.E.
FLORIDA Lic. # 44167

ASSA / BERTHA COLONIAL SHUTTER (WITH STORM BARS)

AMERICAN SHUTTER SYSTEMS ASSOC., INC.
4268 WEST ROADS DRIVE
WEST PALM BEACH, FL. 33407
PHONE: (800)432-2204
FAX: (561)209-8380

M.P
DRAWN BY:

7/2/2020
DATE:

20-167
DRAWING No

SHEET 25 OF 33

REV. No	DESCRIPTION	DATE	REV. No	DESCRIPTION	DATE
1	OLD 17-114	7/2/2020	3		
2			4		

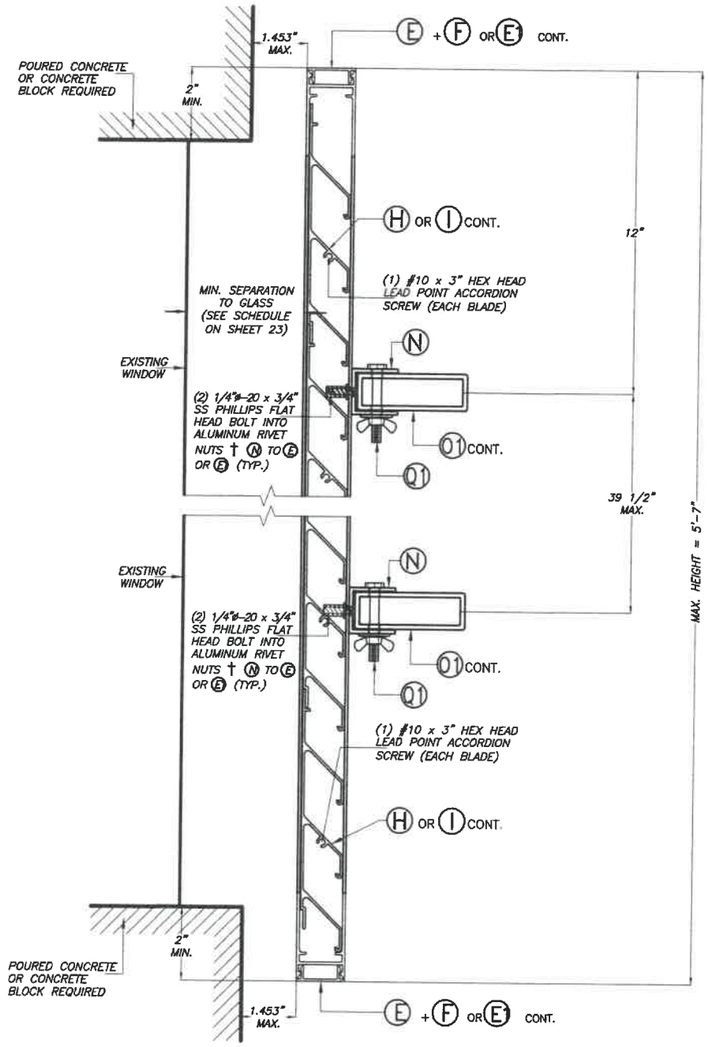

SECTION B–B

(WALL MOUNT)
HURRICANE POSITION
SCALE 1/4"=1"

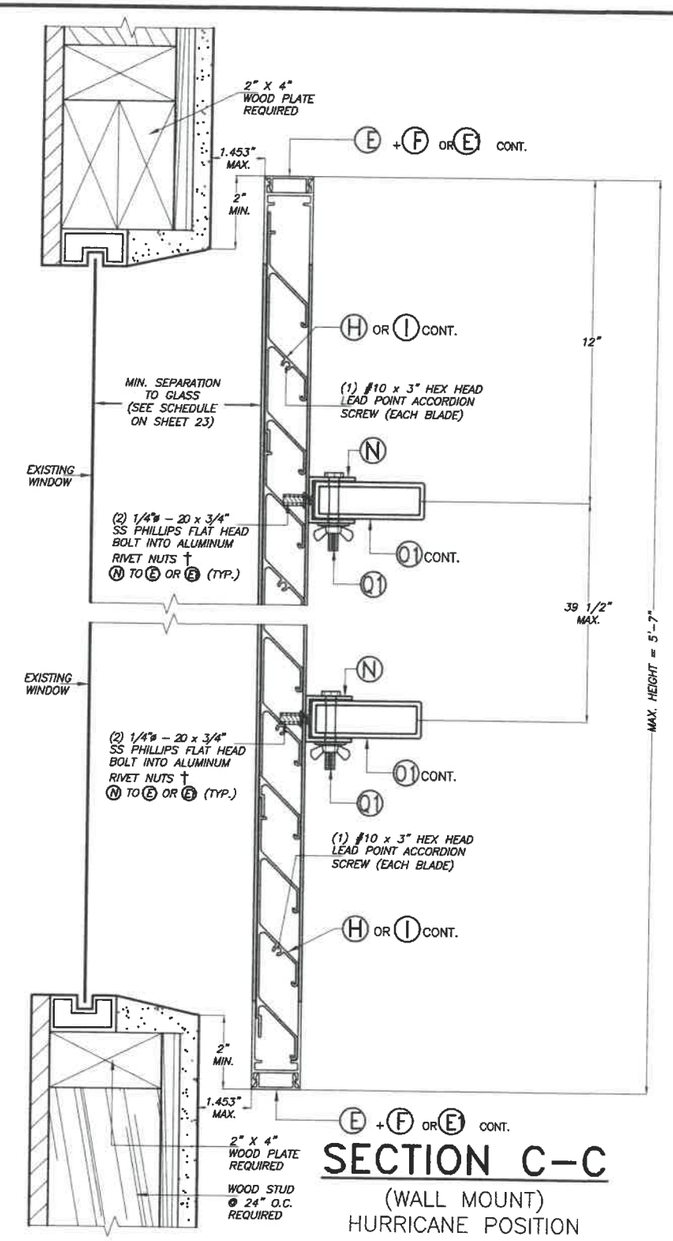

SECTION C–C

(WALL MOUNT)
HURRICANE POSITION
SCALE 1/4"=1"

†: 1/4"ø–20x3/4", AS DISTRIBUTED BY ALL POINT SCREW, BOLT AND SPECIALITY CO. (PART # 25CRFNA)

WALTER A. TILLIT JR. LICENSE No. 44167 STATE OF FLORIDA PROFESSIONAL ENGINEER

7/2/2020

©2020 TILTECO, INC.

TILTECO INC.
TILLIT TESTING & ENGINEERING COMPANY
6355 N.W. 36th. St., Ste. 305, VIRGINIA GARDENS, FLORIDA 33166
Phone : (305)871-1530 . Fax : (305)871-1531
e-mail: tilteco@aol.com
CA-0006719
WALTER A. TILLIT Jr., P.E.
FLORIDA Lic. # 44167

FLORIDA BUILDING CODE (Non High Velocity Hurricane Zone)

COMBINATION DRAWING:
ASSA / EXTRUDED BERTHA BAHAMA SHUTTER (SHEETS 1 THRU 9 OF 33)
ASSA / BERTHA COLONIAL SHUTTER (SHEETS 10 THRU 33 OF 33)

ASSA / BERTHA COLONIAL SHUTTER (WITH STORM BARS)

M.P
DRAWN BY:

AMERICAN SHUTTER SYSTEMS ASSOC., INC.
4268 WEST ROADS DRIVE
WEST PALM BEACH, FL. 33407
PHONE: (800)432-2204
FAX: (561)209-8380

7/2/2020
DATE:

20-167
DRAWING No

REV. No	DESCRIPTION	DATE	REV. No	DESCRIPTION	DATE
1	OLD 17-114	7/2/2020	3		
2			4		

SHEET 26 OF 33

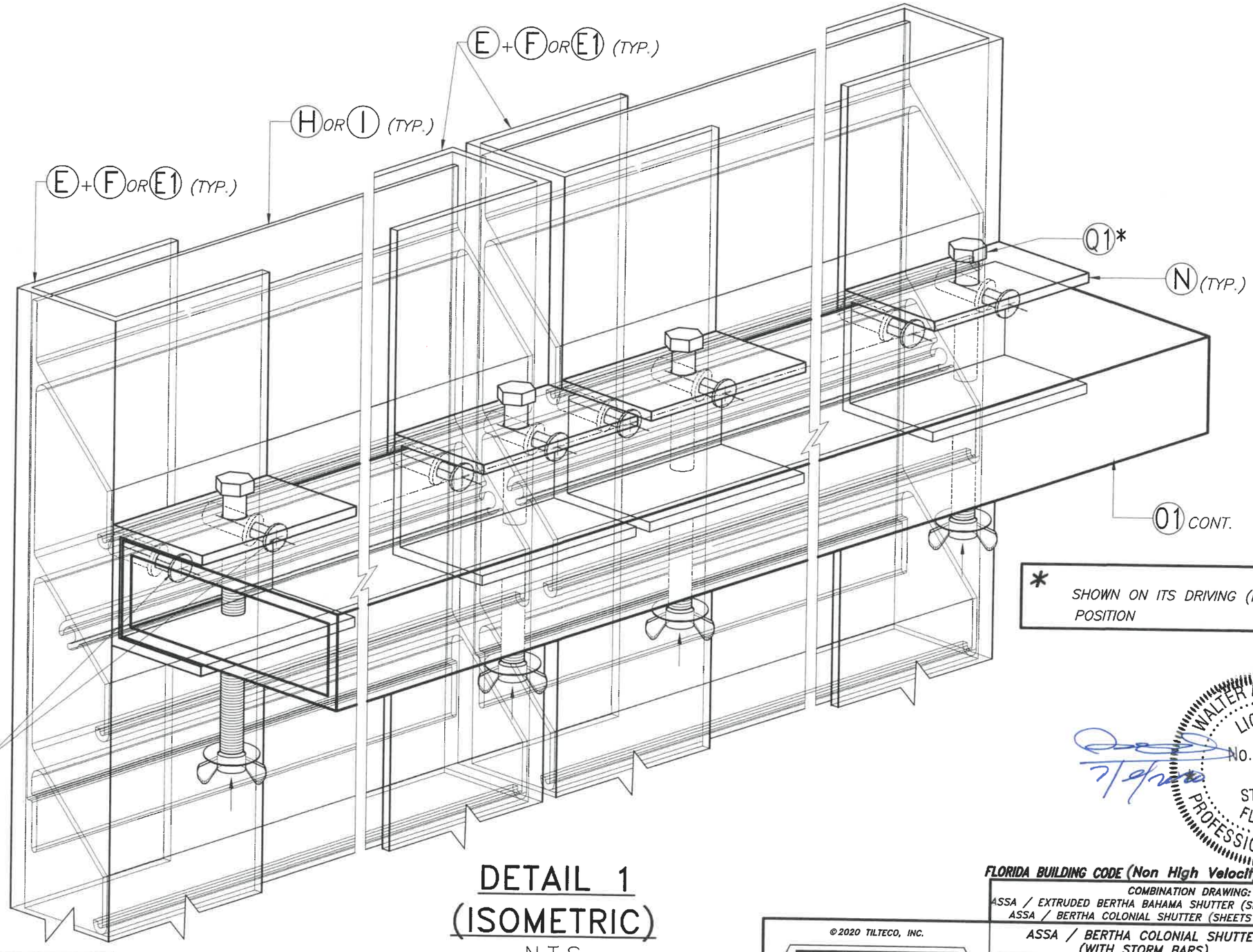

* SHOWN ON ITS DRIVING (INSTALLATION) POSITION

† 1/4"ø–20x3/4", AS DISTRIBUTED BY ALL POINT SCREW, BOLT AND SPECIALITY CO. (PART # 25CRFNA)

DETAIL 1 (ISOMETRIC)

N.T.S

WALTER A. TILLIT JR. LICENSE No. 44167 STATE OF FLORIDA PROFESSIONAL ENGINEER

7/9/2020

FLORIDA BUILDING CODE (Non High Velocity Hurricane Zone)

COMBINATION DRAWING:
ASSA / EXTRUDED BERTHA BAHAMA SHUTTER (SHEETS 1 THRU 9 OF 33)
ASSA / BERTHA COLONIAL SHUTTER (SHEETS 10 THRU 33 OF 33)

©2020 TILTECO, INC.

TILTECO INC.
TILLIT TESTING & ENGINEERING COMPANY
6355 N.W. 36th. St., Ste. 305, VIRGINIA GARDENS, FLORIDA 33166
Phone : (305)871-1530 . Fax : (305)871-1531
e-mail: tilteco@aol.com
CA-0006719
WALTER A. TILLIT Jr., P.E.
FLORIDA Lic. # 44167

ASSA / BERTHA COLONIAL SHUTTER (WITH STORM BARS)

AMERICAN SHUTTER SYSTEMS ASSOC., INC.
4268 WEST ROADS DRIVE
WEST PALM BEACH, FL. 33407
PHONE: (800)432-2204
FAX: (561)209-8380

REV. No	DESCRIPTION	DATE	REV. No	DESCRIPTION	DATE
1	OLD 17-114	7/2/2020	3		
2			4		

DRAWN BY: M.P
DATE: 7/2/2020
DRAWING No: 20-167
SHEET 27 OF 33

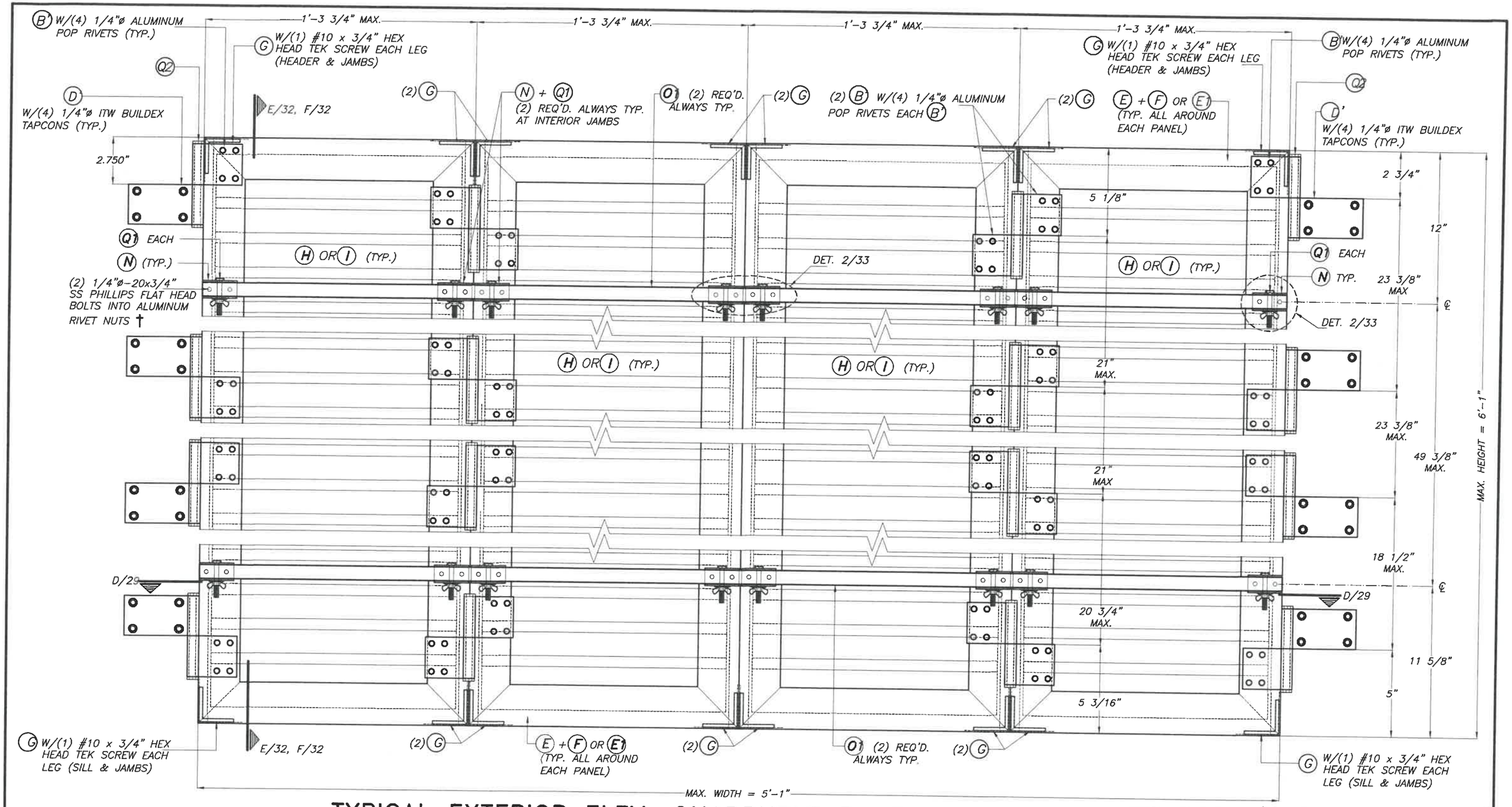

TYPICAL EXTERIOR ELEV. QUADRUPLE PANEL FOR (HURRICANE POSITION)

SCALE: 3/16"=1"

†: 1/4"ø-20x3/4", AS DISTRIBUTED BY ALL POINT SCREW, BOLT AND SPECIALITY CO. (PART # 25CRFNA)

MAXIMUM A.S.D. DESIGN PRESSURE RATING = +51.0, -70.0 p.s.f. FOR INSTALLATION INTO CONCRETE OR CONCRETE BLOCK WALL SUBSTRATE.

WALTER A. TILLIT JR. LICENSE No. 44167 STATE OF FLORIDA PROFESSIONAL ENGINEER

7/2/2020

©2020 TILTECO, INC.

TILTECO INC.
TILLIT TESTING & ENGINEERING COMPANY
8355 N.W. 36th. St., Ste. 305, VIRGINIA GARDENS, FLORIDA 33166
Phone : (305)871-1530 . Fax : (305)871-1531
e-mail: tilteco@aol.com
CA-0006719
WALTER A. TILLIT Jr., P.E.
FLORIDA Lic. # 44167

FLORIDA BUILDING CODE (Non High Velocity Hurricane Zone)

COMBINATION DRAWING:
ASSA / EXTRUDED BERTHA BAHAMA SHUTTER (SHEETS 1 THRU 9 OF 33)
ASSA / BERTHA COLONIAL SHUTTER (SHEETS 10 THRU 33 OF 33)

ASSA / BERTHA COLONIAL SHUTTER (WITH STORM BARS)

AMERICAN SHUTTER SYSTEMS ASSOC., INC.
4268 WEST ROADS DRIVE
WEST PALM BEACH, FL. 33407
PHONE: (800)432-2204
FAX: (561)209-8380

REV. No	DESCRIPTION	DATE	REV. No	DESCRIPTION	DATE
1	OLD 17-114	7/2/2020	3		
2			4		

M.P
DRAWN BY:

7/2/2020
DATE:

20-167
DRAWING No

SHEET 28 OF 33

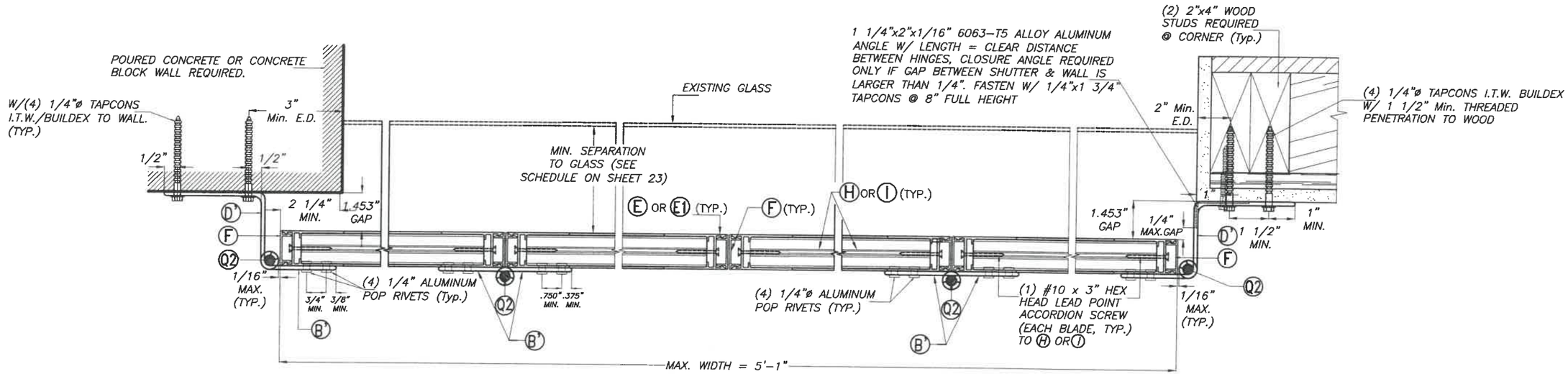

1

SECTION D-D

SCALE 1/4"=1"

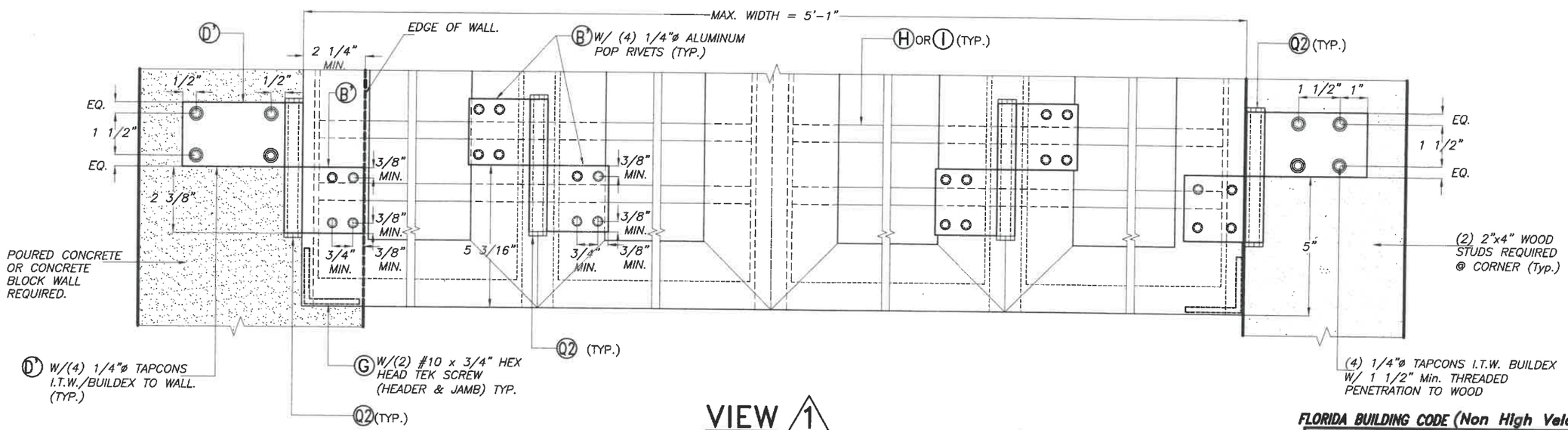

VIEW 1
(PARTIAL ELEVATION AT BOTTOM)

SCALE 1/4"=1"

WALTER A. TILLIT JR. LICENSE No. 44167 STATE OF FLORIDA PROFESSIONAL ENGINEER

7/2/2020

FLORIDA BUILDING CODE (Non High Velocity Hurricane Zone)

COMBINATION DRAWING:
ASSA / EXTRUDED BERTHA BAHAMA SHUTTER (SHEETS 1 THRU 9 OF 33)
ASSA / BERTHA COLONIAL SHUTTER (SHEETS 10 THRU 33 OF 33)

©2020 TILTECO, INC.

TILTECO INC.
TILLIT TESTING & ENGINEERING COMPANY
6355 N.W. 36th. St., Ste. 305, VIRGINIA GARDENS, FLORIDA 33166
Phone : (305)871-1530 . Fax : (305)871-1531
e-mail: tilteco@aol.com
CA-0006719
WALTER A. TILLIT Jr., P.E.
FLORIDA Lic. # 44167

ASSA / BERTHA COLONIAL SHUTTER (WITH STORM BARS)

AMERICAN SHUTTER SYSTEMS ASSOC., INC.
4268 WEST ROADS DRIVE
WEST PALM BEACH, FL. 33407
PHONE: (800)432-2204
FAX: (561)209-8380

REV. No	DESCRIPTION	DATE	REV. No	DESCRIPTION	DATE
1	OLD 17-114	7/2/2020	3		
2			4		

DRAWN BY: M.P
DATE: 7/2/2020
DRAWING No: 20-167
SHEET 29 OF 33

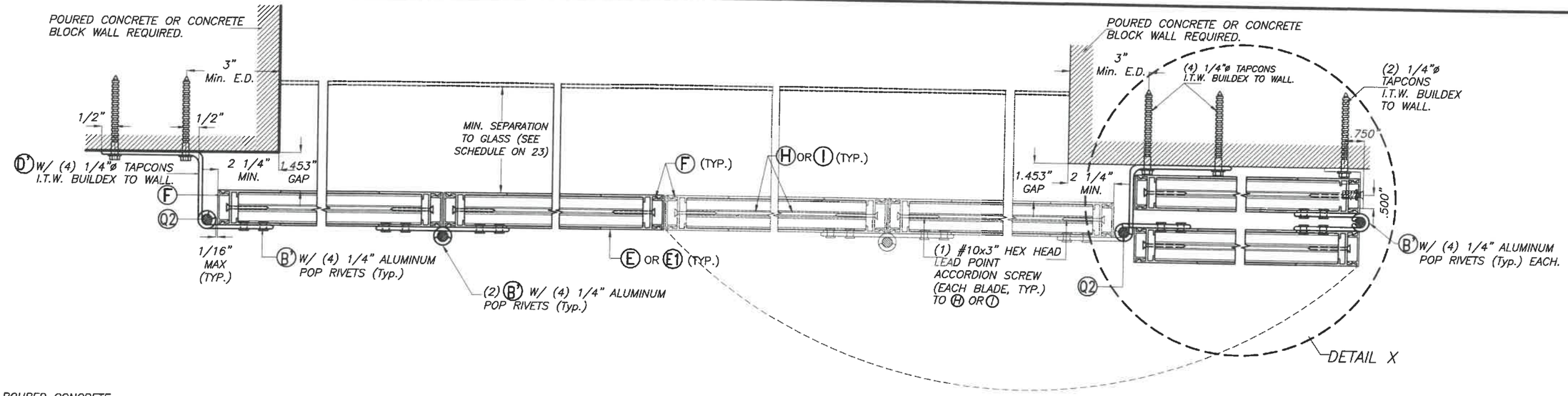

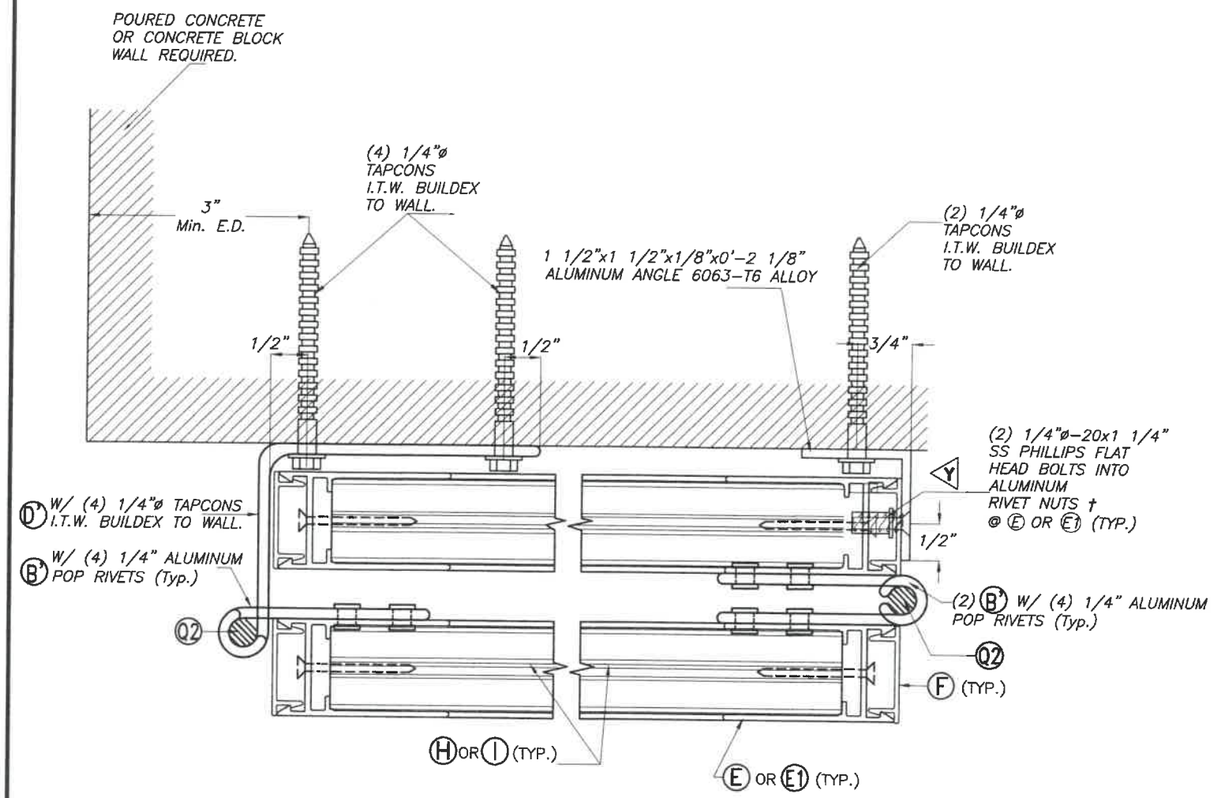

DETAIL X (NON HURRICANE POSITION)

SCALE 1/8"=1"

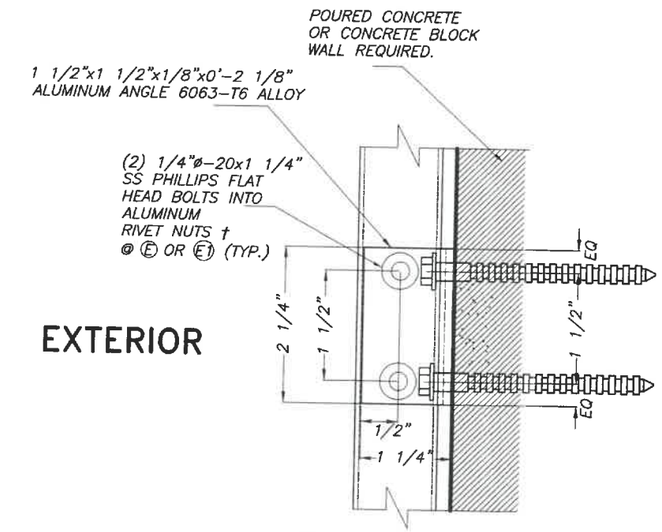

ELEVATION Y-Y

SCALE 1/8"=1"

†: 1/4"ø-20x3/4", AS DISTRIBUTED BY ALL POINT SCREW, BOLT AND SPECIALITY CO. (PART # 25CRFNA)

WALTER A. TILLIT JR. LICENSE No. 44167 STATE OF FLORIDA PROFESSIONAL ENGINEER

7/2/2020

©2020 TILTECO, INC.

TILTECO INC.
TILLIT TESTING & ENGINEERING COMPANY
6325 N.W. 36th. St., Ste. 305, VIRGINIA GARDENS, FLORIDA 33166
Phone : (305)871-1530 . Fax : (305)871-1531
e-mail: tilteco@aol.com
CA-0006719
WALTER A. TILLIT Jr., P.E.
FLORIDA Lic. # 44167

FLORIDA BUILDING CODE (Non High Velocity Hurricane Zone)

COMBINATION DRAWING:
ASSA / EXTRUDED BERTHA BAHAMA SHUTTER (SHEETS 1 THRU 9 OF 33)
ASSA / BERTHA COLONIAL SHUTTER (SHEETS 10 THRU 33 OF 33)

ASSA / BERTHA COLONIAL SHUTTER (WITH STORM BARS)

AMERICAN SHUTTER SYSTEMS ASSOC., INC.
4268 WEST ROADS DRIVE
WEST PALM BEACH, FL. 33407
PHONE: (800)432-2204
FAX: (561)209-8380

M.P DRAWN BY:
7/2/2020 DATE:
20-167 DRAWING No
SHEET 30 OF 33

REV. No	DESCRIPTION	DATE	REV. No	DESCRIPTION	DATE
1	OLD 17-114	7/2/2020	3		
2			4		

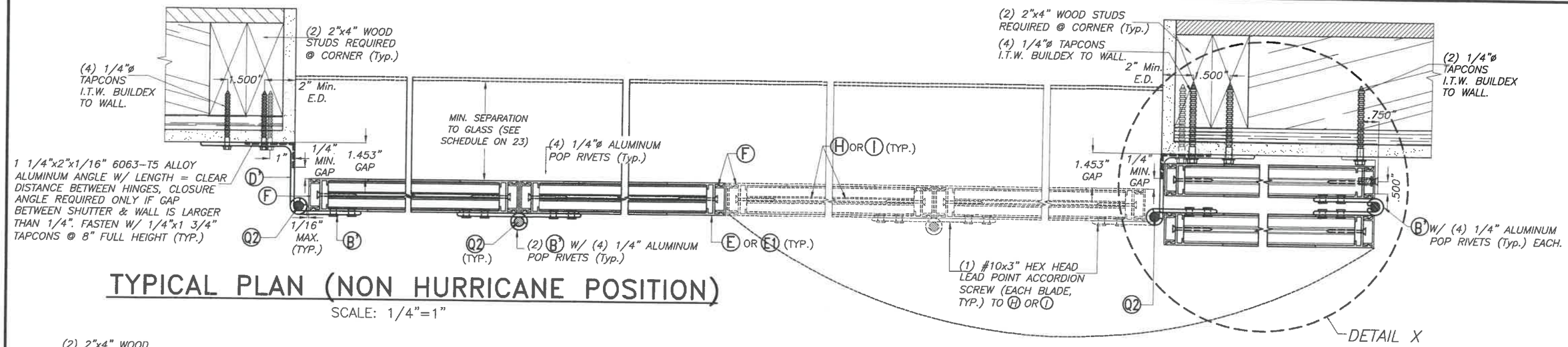

TYPICAL PLAN (NON HURRICANE POSITION)

SCALE: 1/4"=1"

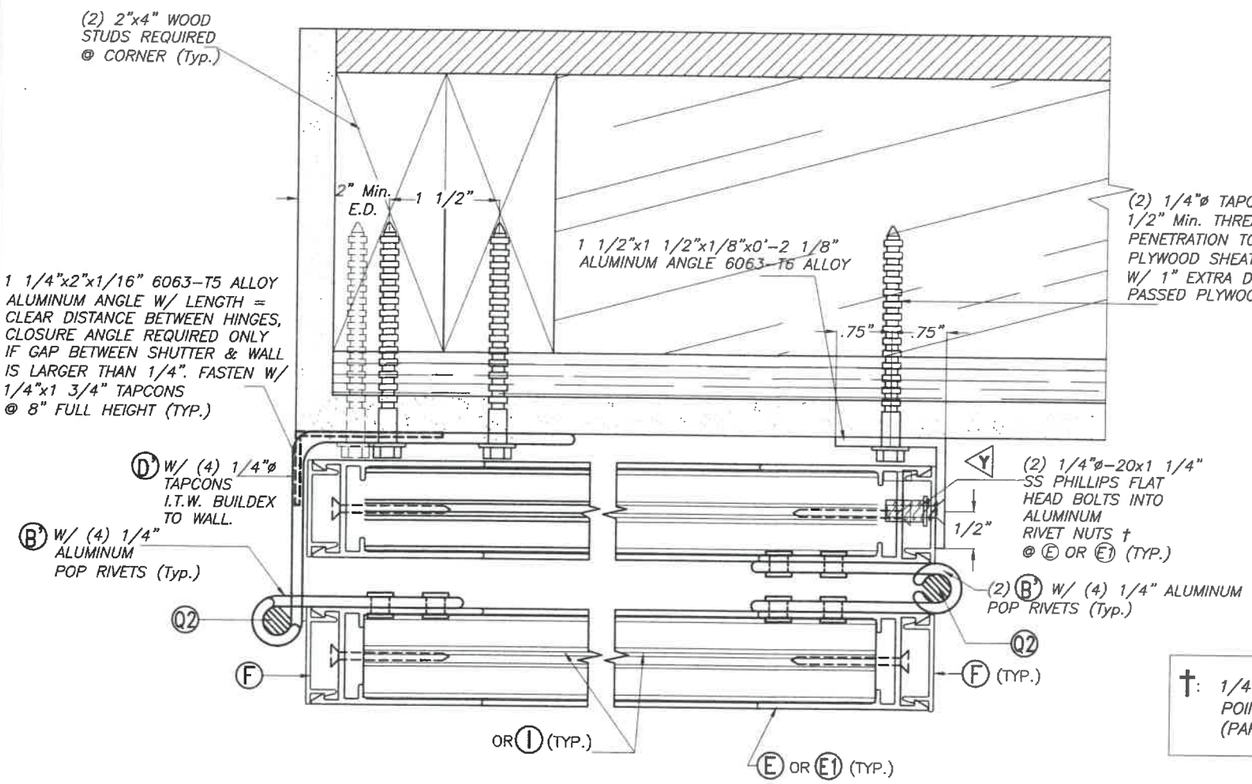

DETAIL X (NON HURRICANE POSITION)

SCALE 1/8"=1"

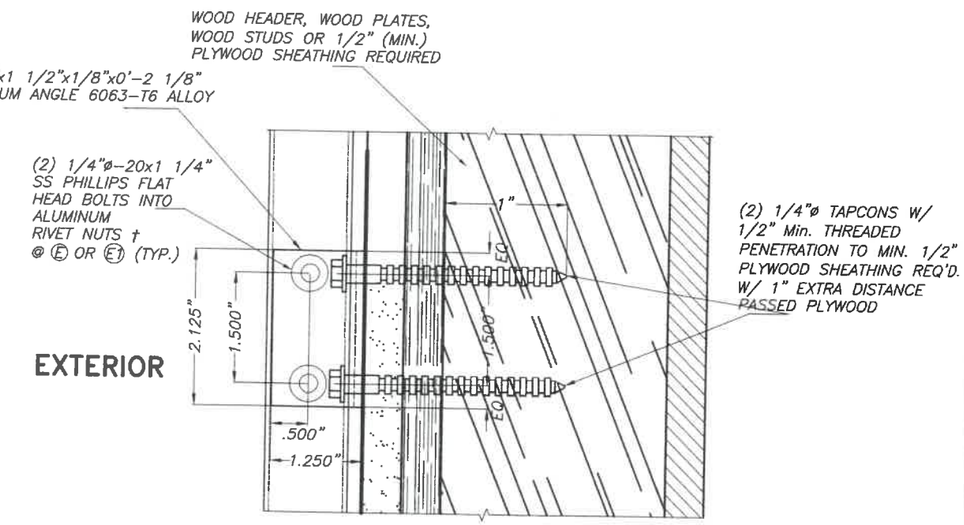

ELEVATION Y-Y

SCALE 1/8"=1"

†: 1/4"ø-20x3/4", AS DISTRIBUTED BY ALL POINT SCREW, BOLT AND SPECIALITY CO. (PART # 25CRFNA)

WALTER A. TILLIT JR. LICENSE No. 44167 STATE OF FLORIDA PROFESSIONAL ENGINEER

7/2/2020

©2020 TILTECO, INC.

TILTECO INC.
TILLIT TESTING & ENGINEERING COMPANY
4355 N.W. 36th. St., Ste. 305, VIRGINIA GARDENS, FLORIDA 33166
Phone : (305)871-1530 . Fax : (305)871-1531
e-mail: tilteco@aol.com
CA-0006719
WALTER A. TILLIT Jr., P.E.
FLORIDA Lic. # 44167

FLORIDA BUILDING CODE (Non High Velocity Hurricane Zone)

COMBINATION DRAWING:
ASSA / EXTRUDED BERTHA BAHAMA SHUTTER (SHEETS 1 THRU 9 OF 33)
ASSA / BERTHA COLONIAL SHUTTER (SHEETS 10 THRU 33 OF 33)

ASSA / BERTHA COLONIAL SHUTTER (WITH STORM BARS)

AMERICAN SHUTTER SYSTEMS ASSOC., INC.
4268 WEST ROADS DRIVE
WEST PALM BEACH, FL. 33407
PHONE: (800)432-2204
FAX: (561)209-8380

M.P
DRAWN BY:

7/2/2020
DATE:

20-167
DRAWING No

REV. No	DESCRIPTION	DATE	REV. No	DESCRIPTION	DATE
1	OLD 17-114	7/2/2020	3		
2			4		

SHEET 31 OF 33

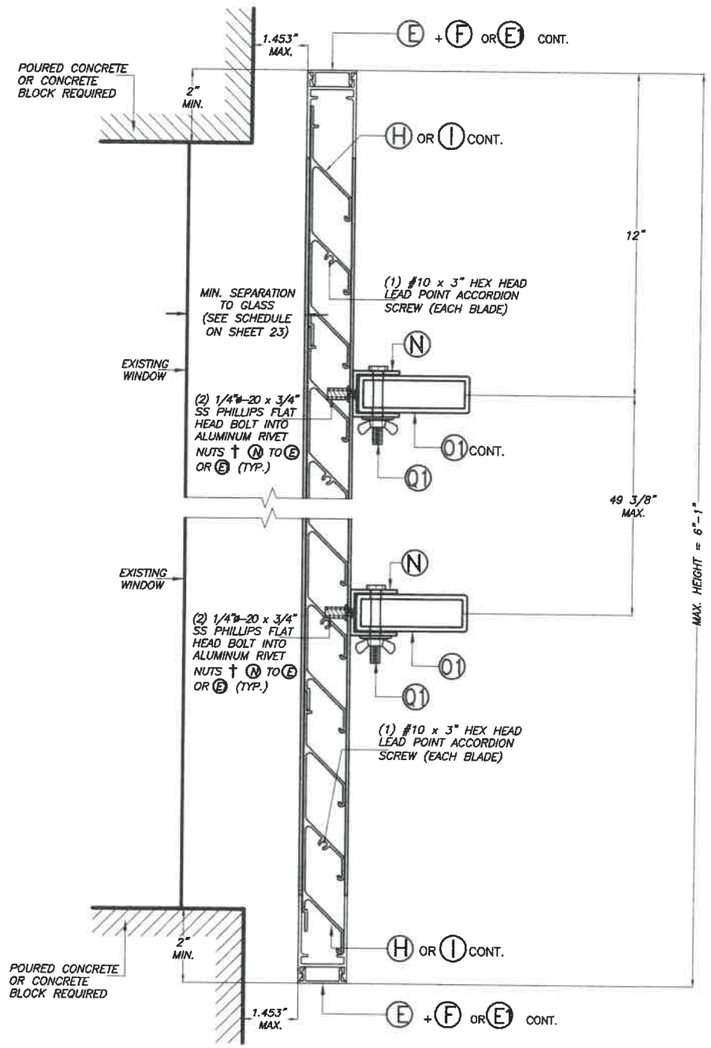

SECTION E–E

(WALL MOUNT)
HURRICANE POSITION
SCALE 1/4"=1"

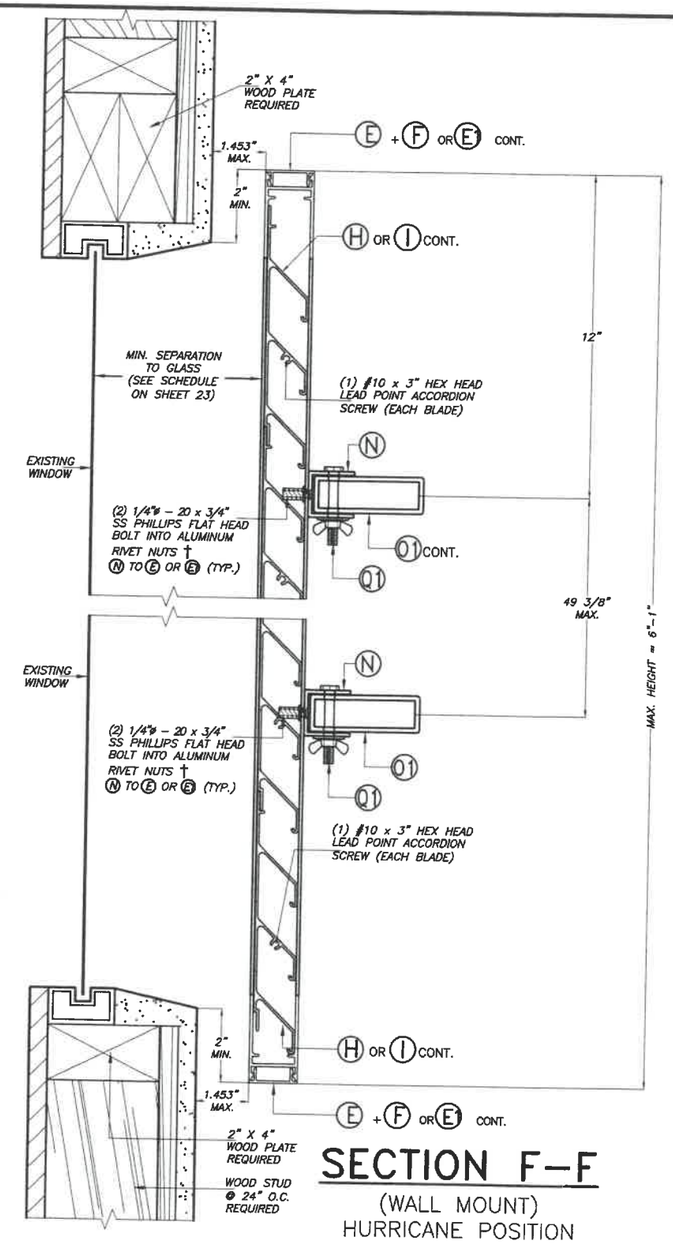

SECTION F–F

(WALL MOUNT)
HURRICANE POSITION
SCALE 1/4"=1"

FLORIDA BUILDING CODE (Non High Velocity Hurricane Zone)

COMBINATION DRAWING:
ASSA / EXTRUDED BERTHA BAHAMA SHUTTER (SHEETS 1 THRU 9 OF 33)
ASSA / BERTHA COLONIAL SHUTTER (SHEETS 10 THRU 33 OF 33)

† : 1/4"ø–20x3/4", AS DISTRIBUTED BY ALL POINT SCREW, BOLT AND SPECIALITY CO. (PART #25 CRFNA)

WALTER A. TILLIT JR. LICENSE No. 44167 STATE OF FLORIDA PROFESSIONAL ENGINEER

7/2/2020

©2020 TILTECO, INC.

TILTECO INC.
TILLIT TESTING & ENGINEERING COMPANY
6355 N.W. 36th. St., Ste. 305, VIRGINIA GARDENS, FLORIDA 33166
Phone : (305)871–1530 . Fax : (305)871–1531
e–mail: tilteco@aol.com
CA–0006719
WALTER A. TILLIT Jr., P.E.
FLORIDA Lic. # 44167

ASSA / BERTHA COLONIAL SHUTTER (WITH STORM BARS)

AMERICAN SHUTTER SYSTEMS ASSOC., INC.
4268 WEST ROADS DRIVE
WEST PALM BEACH, FL. 33407
PHONE: (800)432–2204
FAX: (561)209–8380

M.P DRAWN BY:
7/2/2020 DATE:
20–167 DRAWING No
SHEET 32 OF 33

REV. No	DESCRIPTION	DATE	REV. No	DESCRIPTION	DATE
1	OLD 17–114	7/2/2020	3		
2			4		

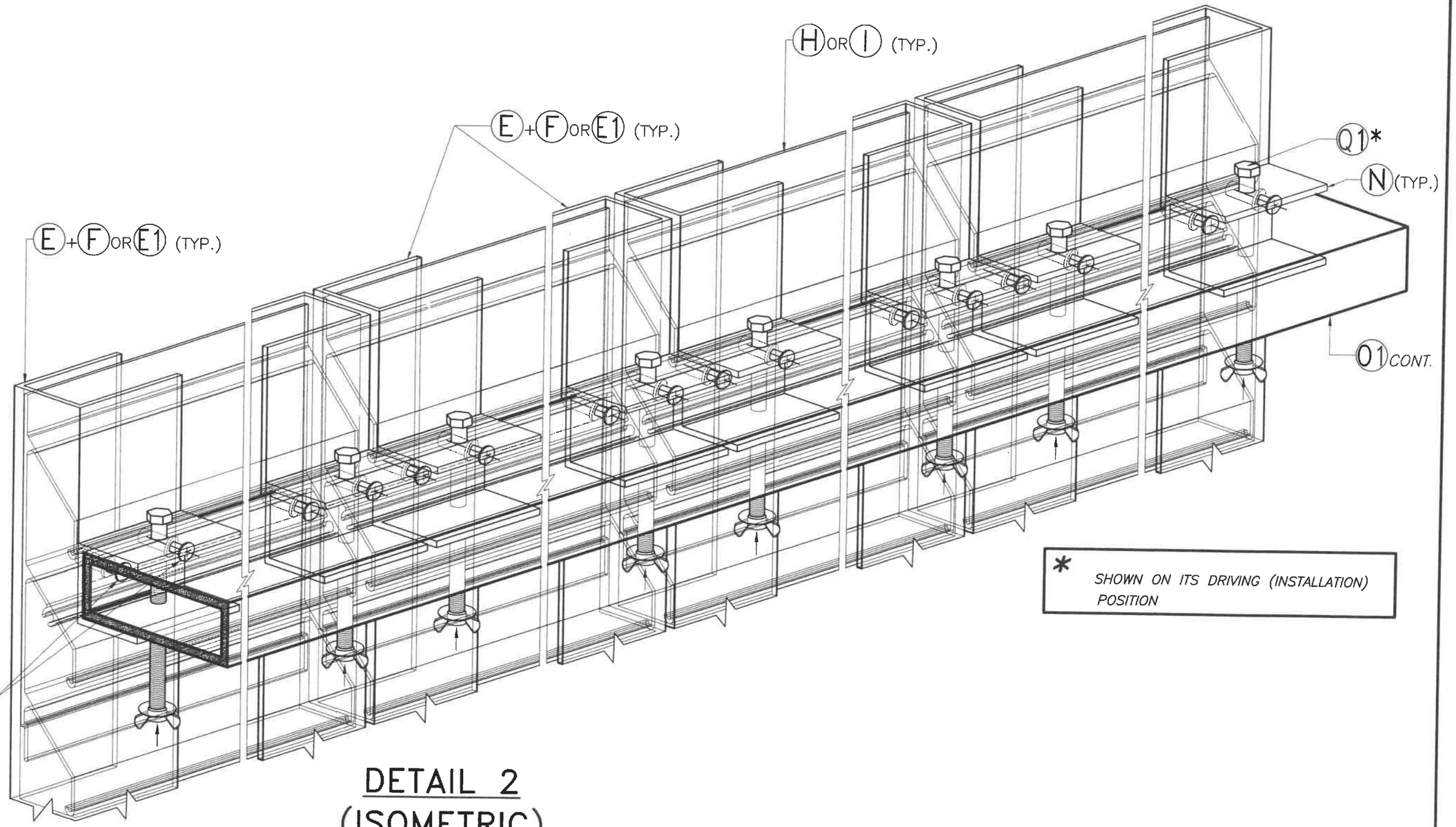

* SHOWN ON ITS DRIVING (INSTALLATION) POSITION

DETAIL 2
(ISOMETRIC)
N.T.S

† 1/4"ø–20x3/4", AS DISTRIBUTED BY ALL POINT SCREW, BOLT AND SPECIALITY CO. (PART # 25CRFNA)

WALTER A. TILLIT JR. LICENSE No. 44167 STATE OF FLORIDA PROFESSIONAL ENGINEER

7/2/2020

©2020 TILTECO, INC.

TILTECO INC.
TILLIT TESTING & ENGINEERING COMPANY
6355 N.W. 36th. St., Ste. 305, VIRGINIA GARDENS, FLORIDA 33166
Phone : (305)871-1530 . Fax : (305)871-1531
e-mail: tilteco@aol.com
CA-0006719
WALTER A. TILLIT Jr., P.E.
FLORIDA Lic. # 44167

FLORIDA BUILDING CODE (Non High Velocity Hurricane Zone)

COMBINATION DRAWING:
ASSA / EXTRUDED BERTHA BAHAMA SHUTTER (SHEETS 1 THRU 9 OF 33)
ASSA / BERTHA COLONIAL SHUTTER (SHEETS 10 THRU 33 OF 33)

ASSA / BERTHA COLONIAL SHUTTER (WITH STORM BARS)

AMERICAN SHUTTER SYSTEMS ASSOC., INC.
4268 WEST ROADS DRIVE
WEST PALM BEACH, FL. 33407
PHONE: (800)432-2204
FAX: (561)209-8380

REV. No	DESCRIPTION	DATE	REV. No	DESCRIPTION	DATE
1	OLD 17-114	7/2/2020	3		
2			4		

M.P
DRAWN BY:

7/2/2020
DATE:

20-167
DRAWING No

SHEET 33 OF 33