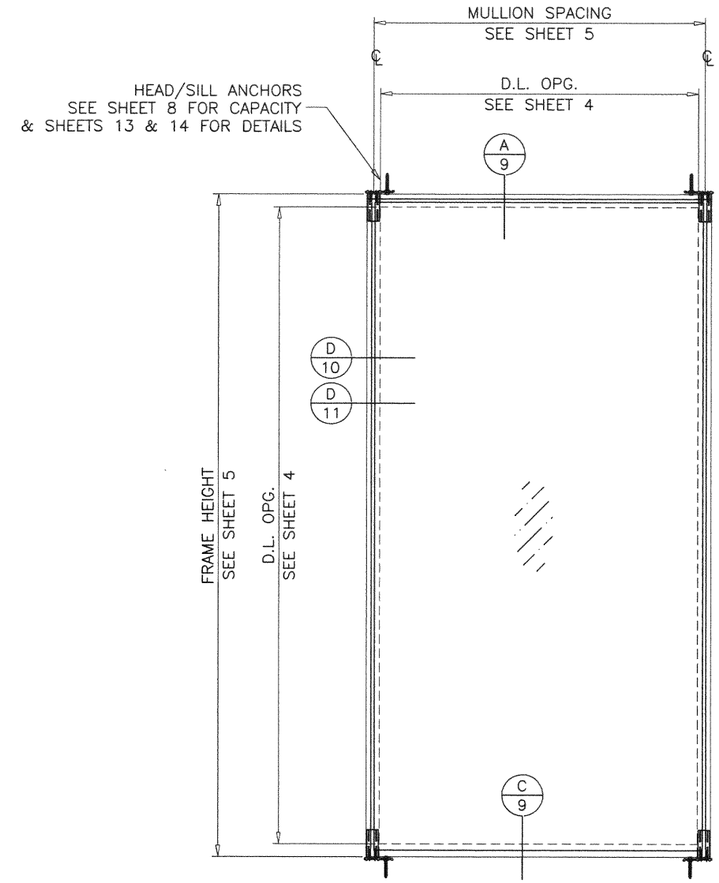

TYPICAL ELEVATION
SINGLE 'O' PANEL

CURTAIN WALL WITH GLASS TYPES 'A' AND 'Ai' COMPLY WITH REQUIREMENTS OF ANSI Z97.1.

THIS SYSTEM IS RATED FOR LARGE & SMALL MISSILE IMPACT. SHUTTERS ARE NOT REQUIRED.

SERIES 2000 STICK ALUMINUM CURTAIN WALL SYSTEM

THIS PRODUCT HAS BEEN DESIGNED AND TESTED TO COMPLY WITH THE REQUIREMENTS OF THE 2017 (6TH EDITION)/2020 (7TH EDITION) FLORIDA BUILDING CODE INCLUDING HIGH VELOCITY HURRICANE ZONE (HVHZ).

ANCHORS SHALL BE CORROSION RESISTANT, SPACED AS SHOWN ON DETAILS AND INSTALLED PER MANUF'S INSTRUCTIONS. SPECIFIED EMBEDMENT TO BASE MATERIAL SHALL BE BEYOND WALL DRESSING OR STUCCO.

ALL SHIMS TO BE HIGH IMPACT, NON-METALLIC AND NON-COMPRESSIBLE.

MATERIALS INCLUDING BUT NOT LIMITED TO STEEL/METAL SCREWS, THAT COME INTO CONTACT WITH OTHER DISSIMILAR MATERIALS SHALL MEET THE REQUIREMENTS OF THE 2017/2020 FLORIDA BLDG. CODE & ADOPTED STANDARDS.

THIS PRODUCT APPROVAL IS GENERIC AND DOES NOT PROVIDE INFORMATION FOR A SITE SPECIFIC PROJECT, i.e. LIFE SAFETY OF THIS PRODUCT, ADEQUACY OF STRUCTURE RECEIVING THIS PRODUCT AND SEALING AROUND OPENING FOR WATER INFILTRATION RESISTANCE ETC.
CONDITIONS NOT SHOWN IN THIS DRAWING ARE TO BE ANALYZED SEPARATELY, AND TO BE REVIEWED BY BUILDING OFFICIAL.

DESIGN LOADS SHOWN ARE BASED ON 'ALLOWABLE STRESS DESIGN (ASD)'.

INSTRUCTIONS:

USE CHARTS AS FOLLOWS.

STEP 1 DETERMINE DESIGN WIND PRESSURE REQUIREMENTS BASED ON WIND VELOCITY, BLDG. HEIGHT, WIND ZONE USING APPLICABLE ASCE 7 STANDARD.

STEP 2 SEE CHARTS ON SHEET 4 FOR GLASS DESIGN LOAD CAPACITY.

STEP 3 CHECK MULLION DESIGN LOAD CAPACITY FOR A GIVEN SPACING AND HEIGHT USING CHARTS ON SHEETS 5 FOR SINGLE SPANS AND SHEET 7 FOR MULTIPLE SPANS. THE CAPACITY SHOULD EXCEED THE DESIGN LOAD.

STEP 4 USING CHARTS ON SHEET 8 SELECT ANCHOR OPTION WITH DESIGN LOAD CAPACITY MORE THAN DESIGN LOAD SPECIFIED IN STEP 1 ABOVE.

STEP 5 THE LOWEST VALUE RESULTING FROM STEPS 2, 3 AND 4 THAT EXCEED THE DESIGN WIND PRESSURES DETERMINED THRU STEP 1 SHALL APPLY TO ENTIRE SYSTEM.

STEP 6 FOR UNANCHORED JAMBS, USING SHEET 10, DETERMINE THE MIN. & MAX. GAP DIMENSIONS.

STEP 7 WHEN USING THIS SYSTEM WITH DOORS, SEE SHEET 7 FOR DOOR MULLION CAPACITY.
THE LOWER VALUE OF THE DESIGN PRESSURE RATING FOR THE SYSTEM AND THE DOOR SHALL APPLY.

LAMINATED GLASS
INSUL. LAM. GLASS
LARGE MISSILE IMPACT

Sealed:8/12/2020 FL #27401

A- CONTRACTOR TO BE RESPONSIBLE FOR THE SELECTION, PURCHASE AND INSTALLATION OF THIS PRODUCT BASED ON THIS PRODUCT EVALUATION PROVIDED HE/SHE DOES NOT DEVIATE FROM THE CONDITIONS DETAILED ON THIS DOCUMENT.

B- THIS PRODUCT EVALUATION DOCUMENT WILL BE CONSIDERED INVALID IF ALTERED BY ANY MEANS.

C- SITE SPECIFIC PROJECTS SHALL BE PREPARED BY A FLORIDA REGISTERED ENGINEER OR ARCHITECT WHICH WILL BECOME THE ENGINEER OF RECORD (E.O.R.) FOR THE PROJECT AND WHO WILL BE RESPONSIBLE FOR THE PROPER USE OF THE P.E.D. ENGINEER OF RECORD, ACTING AS A DELEGATED ENGINEER TO THE P.E.D. ENGINEER SHALL SUBMIT TO THIS LATTER THE SITE SPECIFIC DRAWINGS FOR REVIEW.

D- THIS P.E.D. SHALL BEAR THE DATE AND ORIGINAL SEAL AND SIGNATURE OF THE PROFESSIONAL ENGINEER OF RECORD THAT PREPARED IT.

JALAL FAROOQ
LICENSE
No. 81223
STATE OF FLORIDA
PROFESSIONAL ENGINEER

AL-FAROOQ CORPORATION
ENGINEERS & PRODUCT DEVELOPMENT
9360 SUNSET DRIVE, SUITE 220
MIAMI, FLORIDA 33173 (C.A.N. 3538)
TEL. (305) 264-8100 FAX. (305) 262-6978

COMP-ANL\19-18F-MG

SERIES 2000 STICK ALUM. CURTAIN WALL SYS. (L.M.I.)

MR-GLASS DOORS & WINDOWS MANUFACTURING, LLC
8051 N.W. 79th Place
Medley, FL. 33166
Tel. (305) 764-3963 Fax. (305) 470-8285

revisions:

no	date	by	description
A	12.04.19		NEW TESTS ADDED
B	07.22.20		UPDATED TO 2020 FBC

date: 03-15-19
scale: -
dr. by: TARIQ
chk. by:

drawing no.
19-18F

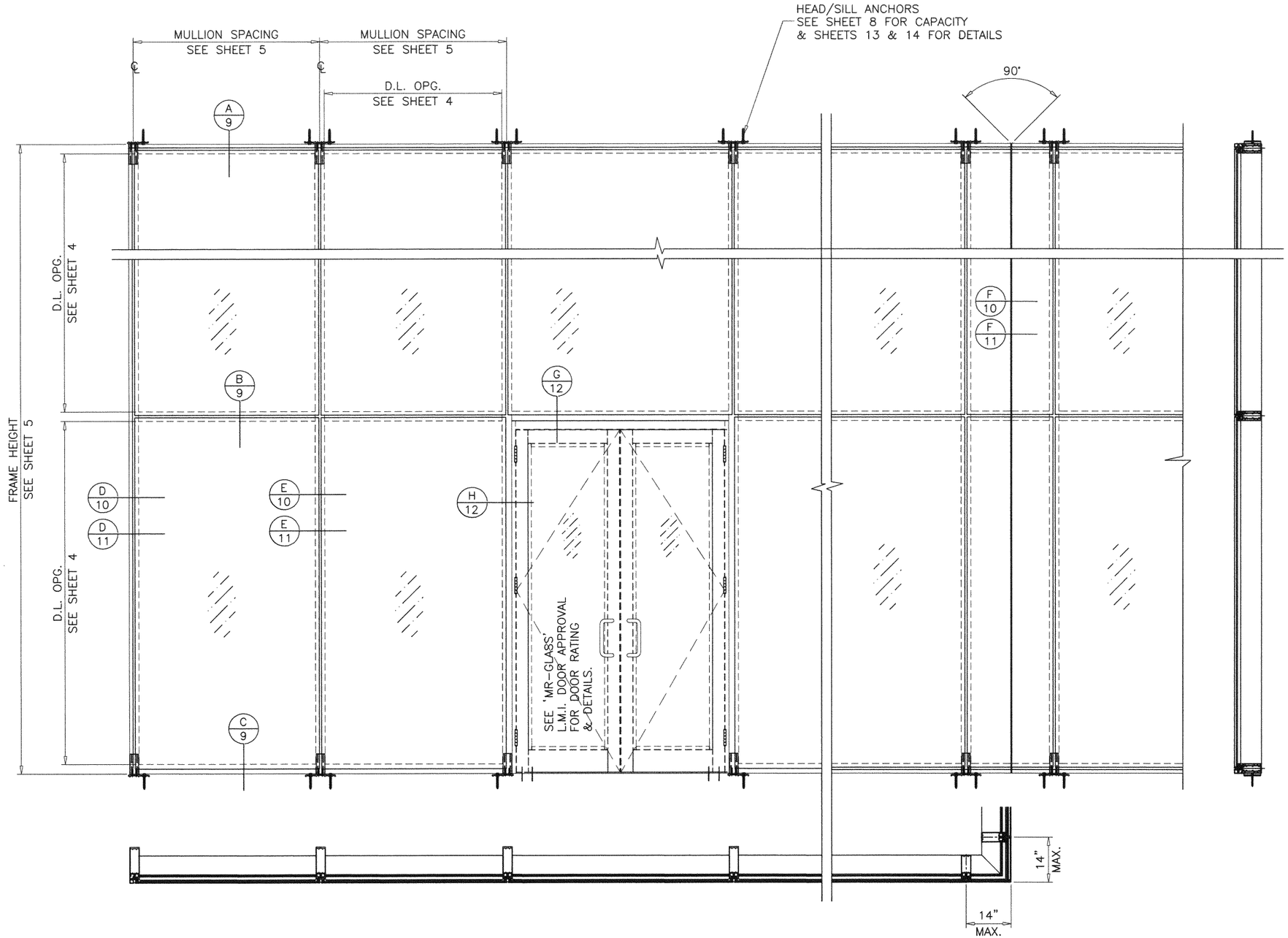

TYPICAL ELEVATION
SINGLE SPANS

Sealed:8/12/2020

FL #27401

JALAL FAROOQ
LICENSE
No. 81223
STATE OF FLORIDA
PROFESSIONAL ENGINEER

AL-FAROOQ CORPORATION
ENGINEERS & PRODUCT DEVELOPMENT
9360 SUNSET DRIVE, SUITE 220
MIAMI, FLORIDA 33173 (C.A.N. 3538)
TEL. (305) 264-8100 FAX. (305) 262-6978

COMP-ANL\19-18F-MG

SERIES 2000 STICK ALUM. CURTAIN WALL SYS. (L.M.I.)

MR-GLASS DOORS & WINDOWS MANUFACTURING, LLC
8051 N.W. 79th Place
Medley, FL. 33166
Tel. (305) 764-3963 Fax. (305) 470-8285

revisions:

no	date	by	description

date: 03-15-19
scale: 3/8"=1'-0"
dr. by: TARIQ
chk. by:

drawing no.
19-18F

sheet 2 of 21

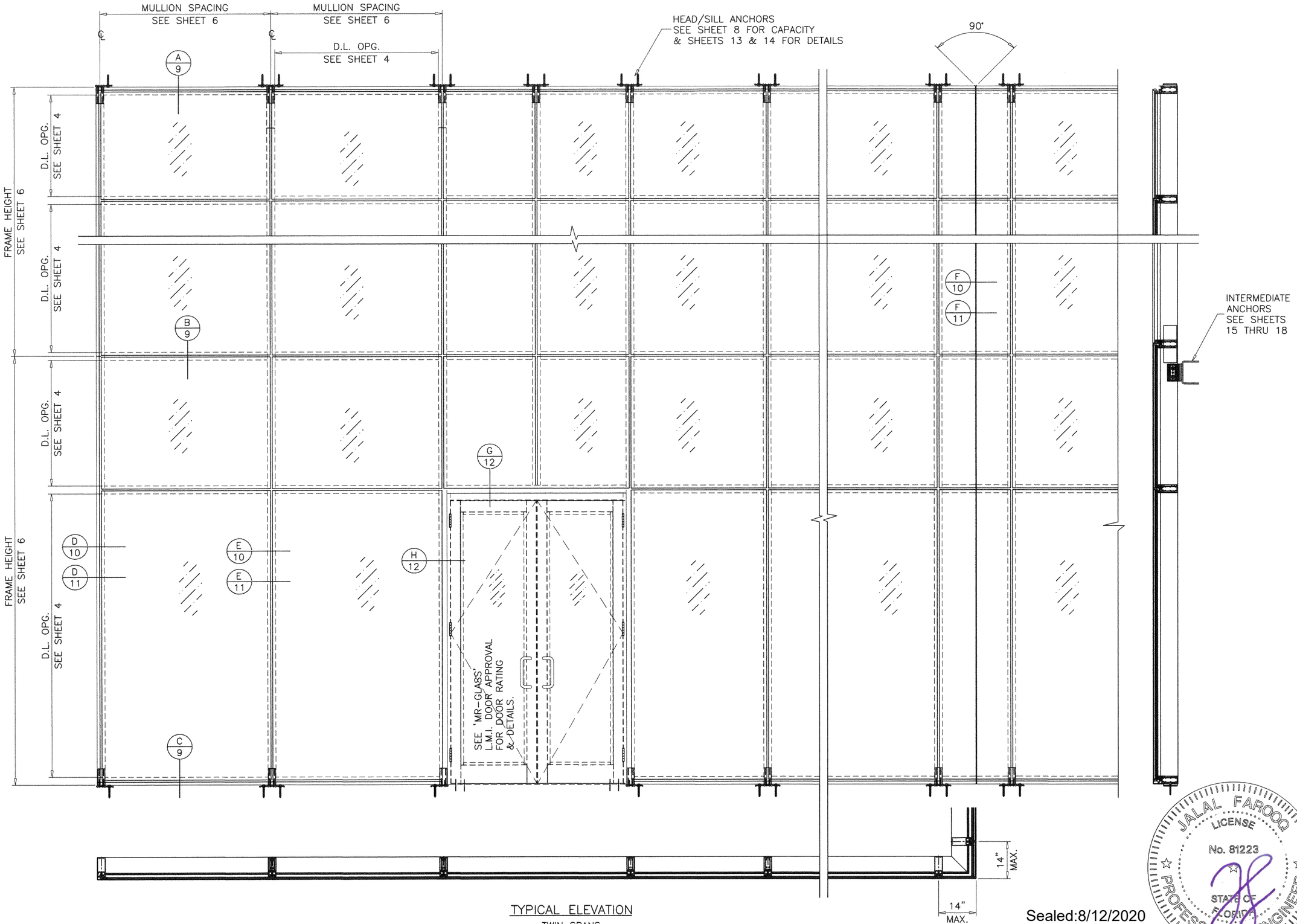

TYPICAL ELEVATION
TWIN SPANS

Sealed:8/12/2020
FL #27401

JALAL FAROOQ
LICENSE
No. 81223
STATE OF FLORIDA
PROFESSIONAL ENGINEER

AL-FAROOQ CORPORATION
ENGINEERS & PRODUCT DEVELOPMENT
9360 SUNSET DRIVE, SUITE 220
MIAMI, FLORIDA 33173 (C.A.N. 3538)
TEL. (305) 264-8100 FAX. (305) 262-6978

COMP-ANL\19-18F-MG

SERIES 2000 STICK ALUM. CURTAIN WALL SYS. (L.M.I.)

MR-GLASS DOORS & WINDOWS MANUFACTURING, LLC
8051 N.W. 79th Place
Medley, FL. 33166
Tel. (305) 764-3963 Fax. (305) 470-8285

revisions:

no	date	by	description

date: 03-15-19
scale: 3/8"=1'-0"
dr. by: TARIQ
chk. by:

drawing no.
19-18F

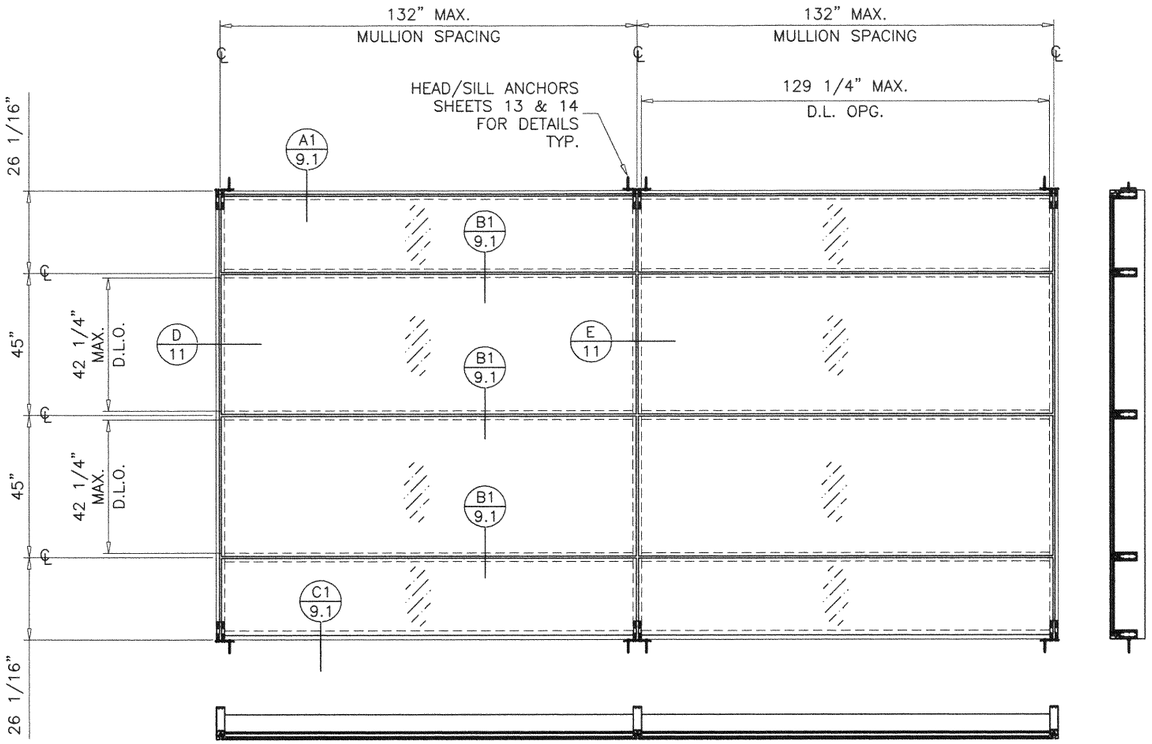

GLASS DESIGN LOAD CAPACITY – PSF					
NOMINAL DIMS.		GLASS TYPE 'Ai'		GLASS TYPE 'Bi'	
D.L.O. WIDTH	D.L.O. HEIGHT	EXT. (+)	INT. (–)	EXT. (+)	INT. (–)
42–1/4"	90–1/2"	60.0	60.0	60.0	60.0
45–1/4"		60.0	60.0	56.3	56.3
51–1/4"		60.0	60.0	50.0	50.0
57–1/4"		60.0	60.0	45.0	45.0
42–1/4"	102–1/2"	60.0	60.0	60.0	60.0
45–1/4"		60.0	60.0	56.3	56.3
51–1/4"		60.0	60.0	50.0	50.0
42–1/4"	114–1/2"	60.0	60.0	60.0	60.0
45–1/4"		60.0	60.0	56.3	56.3
42–1/4"	126–1/2"	60.0	60.0	60.0	60.0
30–3/8"	129–1/4"	60.0	60.0	60.0	60.0

HEAD/SILL ANCHOR DESIGN LOAD CAPACITY – PSF EXT.(+) & INT.(–)									
NOMINAL DIMS.		ANCHOR TYPE 'A'			ANCHOR TYPE 'B'				ANCHOR TYPE 'C'
		'F' CLIP INTO CONC.	'T' CLIP INTO CONC.		'JAMB PLATE' INTO CONC.		'MULLION PLATE' INTO CONC.		'F' CLIP, 'T' CLIP
WIDTH (W)	FRAME HEIGHT	4000 PSI	4000 PSI	6000 PSI	4000 PSI	6000 PSI	4000 PSI	6000 PSI	
96"	126"	60.0	60.0	60.0	60.0	60.0	60.0	60.0	60.0
108"		60.0	58.4	60.0	60.0	60.0	60.0	60.0	60.0
120"		60.0	52.6	60.0	60.0	60.0	60.0	60.0	60.0
132"		60.0	47.8	58.2	60.0	60.0	57.1	60.0	60.0
96"	132"	60.0	60.0	60.0	60.0	60.0	60.0	60.0	60.0
108"		60.0	55.8	60.0	60.0	60.0	60.0	60.0	60.0
120"		60.0	50.2	60.0	60.0	60.0	60.0	60.0	60.0
132"		60.0	45.6	55.5	59.5	60.0	54.5	60.0	60.0
60"	144"	60.0	60.0	60.0	60.0	60.0	60.0	60.0	60.0
96"		60.0	57.5	60.0	60.0	60.0	60.0	60.0	60.0
108"		60.0	51.1	60.0	60.0	60.0	60.0	60.0	60.0
120"		60.0	46.0	56.0	60.0	60.0	55.0	60.0	60.0
132"		60.0	41.8	50.9	60.0	60.0	50.0	60.0	60.0

MULLION DESIGN LOAD CAPACITY – PSF SINGLE SPANS					
NOMINAL DIMS.		MULL 'M4'		MULL 'M6'	
WIDTH (W)	FRAME HEIGHT	EXT.(+)	INT.(–)	EXT.(+)	INT.(–)
132"	120"	60.0	60.0	60.0	60.0
120"	132"	60.0	60.0	60.0	60.0
132"		58.0	58.0	60.0	60.0
96"	144"	60.0	60.0	60.0	60.0
108"		59.5	59.5	60.0	60.0
120"		53.6	53.6	60.0	60.0
132"		48.7	48.7	60.0	60.0

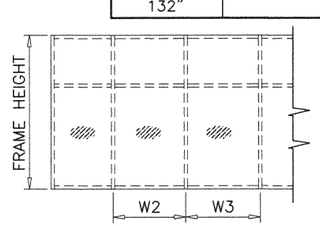

$$\text{WIDTH (W) AT MULLION} = \frac{W2 + W3}{2}$$

CHARTS SHOWN ON THIS SHEET APPLY TO CONDITIONS SHOWN ON SHEETS 3.1 AND 3.2 ONLY

GLASS TYPES 'Ai' AND 'Bi' (SEE CHART ABOVE FOR CAPACITY)
JAMBS TYPE 'J2'
MULLIONS TYPES 'M4' AND 'M6' (SEE CHART AT LEFT FOR CAPACITY)

Sealed:8/12/2020

JALAL FAROOQ
LICENSE
No. 81223
STATE OF FLORIDA
PROFESSIONAL ENGINEER

FL #27401

AL-FAROOQ CORPORATION
ENGINEERS & PRODUCT DEVELOPMENT
9360 SUNSET DRIVE, SUITE 220
MIAMI, FLORIDA 33173 (C.A.N. 3538)
TEL. (305) 264-8100 FAX. (305) 262-6978

COMP–ANL\19–18F–MG

SERIES 2000 STICK ALUM. CURTAIN WALL SYS. (L.M.I.)

MR-GLASS DOORS & WINDOWS MANUFACTURING, LLC
8051 N.W. 79th Place
Medley, FL. 33166
Tel. (305) 764-3963 Fax. (305) 470-8285

revisions:

no	date	by	description

date: 03–15–19
scale: 1/4"=1'–0"
dr. by: TARIQ
chk. by:

drawing no.
19–18F

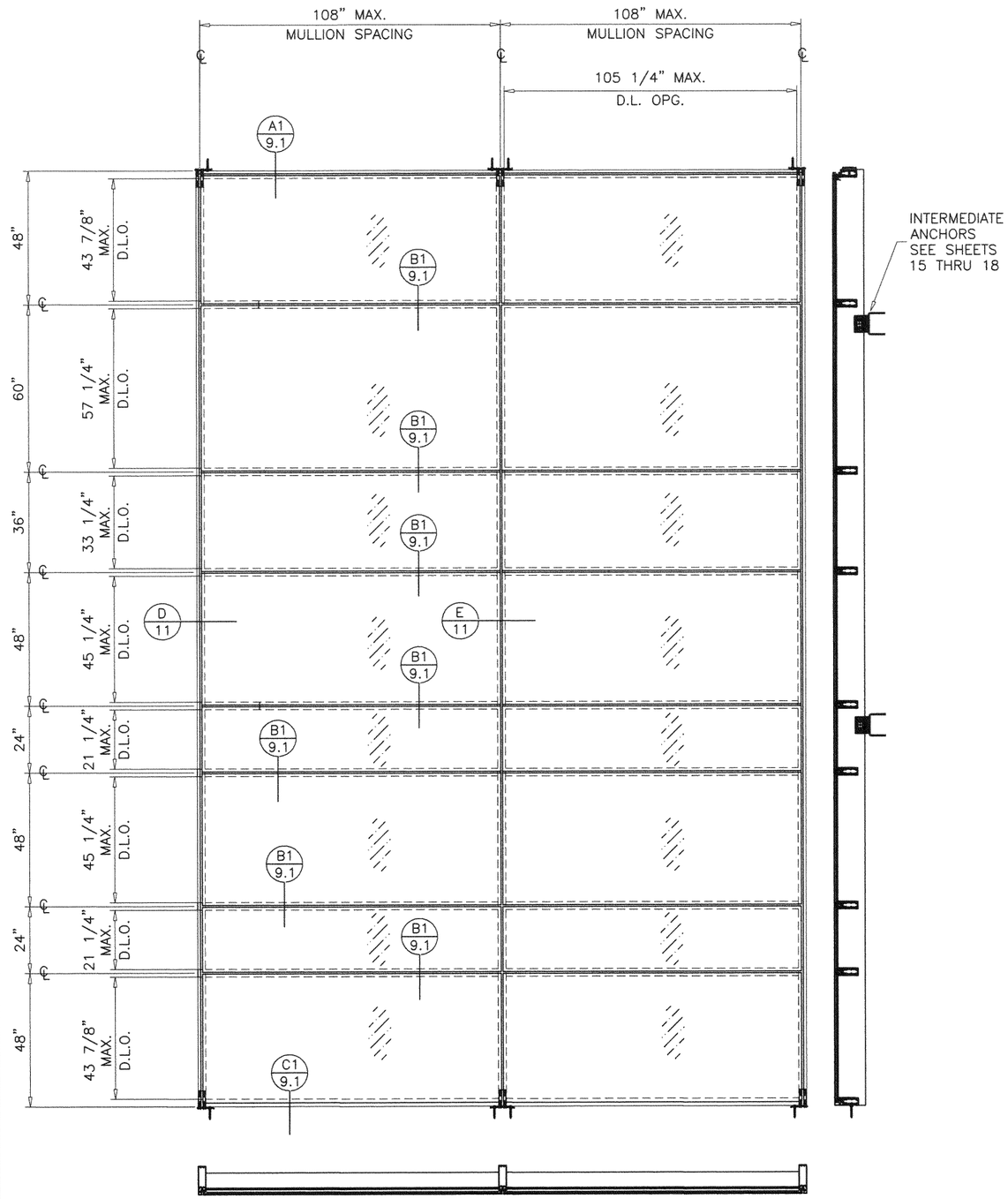

Sealed:8/12/2020

JALAL FAROOQ
LICENSE
No. 81223
STATE OF FLORIDA
PROFESSIONAL ENGINEER

FL #27401

AL-FAROOQ CORPORATION
ENGINEERS & PRODUCT DEVELOPMENT
9360 SUNSET DRIVE, SUITE 220
MIAMI, FLORIDA 33173 (C.A.N. 3538)
TEL. (305) 264-8100 FAX. (305) 262-6978

COMP-ANL\19-18F-MG

SERIES 2000 STICK ALUM. CURTAIN WALL SYS. (L.M.I.)

MR-GLASS DOORS & WINDOWS MANUFACTURING, LLC
8051 N.W. 79th Place
Medley, FL. 33166
Tel. (305) 764-3963 Fax. (305) 470-8285

revisions:

no	date	by	description

date: 03-15-19
scale: 1/4"=1'-0"
dr. by: TARIQ
chk. by:

drawing no.
19-18F

sheet 3.2 of 21

GLASS DESIGN LOAD CAPACITY – PSF			
NOMINAL DIMS.		GLASS TYPES 'A' & 'Ai'	
D.L.O. WIDTH	D.L.O. HEIGHT	EXT. (+)	INT. (–)
33–1/4"	84–1/2"	90.0	100.0
39–1/4"		90.0	100.0
45–1/4"		90.0	100.0
51–1/4"		90.0	100.0
57–1/4"		90.0	100.0
63–1/4"		90.0	100.0
69–1/4"		90.0	100.0
33–1/4"	90–1/2"	90.0	100.0
39–1/4"		90.0	100.0
45–1/4"		90.0	100.0
51–1/4"		90.0	100.0
57–1/4"		90.0	90.0
63–1/4"		81.8	81.8
69–1/4"		75.0	75.0
33–1/4"	102–1/2"	90.0	100.0
39–1/4"		90.0	100.0
45–1/4"		90.0	100.0
51–1/4"		90.0	100.0
57–1/4"		90.0	90.0
63–1/4"		81.8	81.8
33–1/4"	114–1/2"	90.0	100.0
39–1/4"		90.0	100.0
45–1/4"		90.0	100.0
51–1/4"		90.0	98.3
57–1/4"		90.0	90.0
33–1/4"	120–1/2"	90.0	100.0
39–1/4"		90.0	100.0
45–1/4"		90.0	100.0
51–1/4"		90.0	97.0
57–1/4"		90.0	90.0
33–1/4"	126–1/2"	90.0	100.0
39–1/4"		90.0	100.0
45–1/4"		90.0	100.0
51–1/4"		90.0	95.8
33–1/4"	138–1/2"	90.0	100.0
39–1/4"		90.0	100.0
45–1/4"		90.0	100.0

INTERPOLATION BETWEEN WIDTHS OR HEIGHTS ALLOWED.

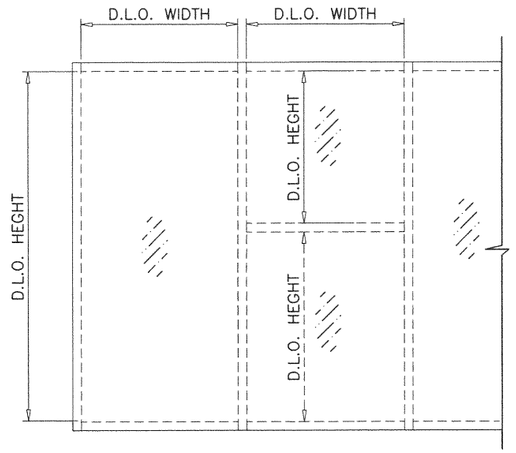

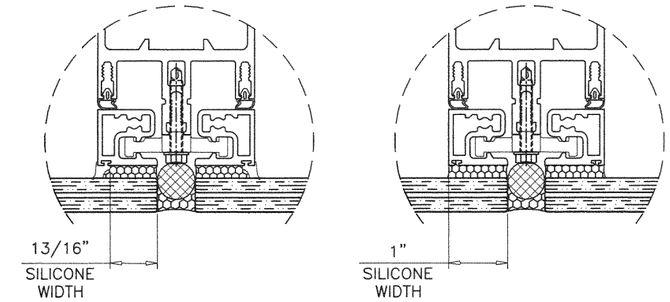

SILICONE CAPACITY – PSF		
	SILICONE WIDTH	
D.L.O. WIDTH	13/16"	1"
39–1/4"	100.0	100.0
45–1/4"	99.0	100.0
51–1/4"	88.0	100.0
57–1/4"	79.2	96.0
63–1/4"	72.0	87.3
69–1/4"	66.0	80.0

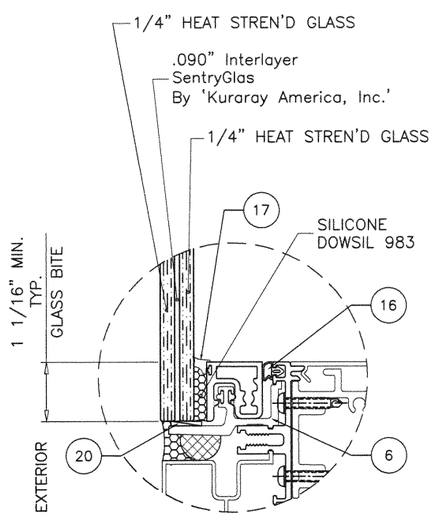

GLASS TYPE 'A'
9/16" LAM. GLASS

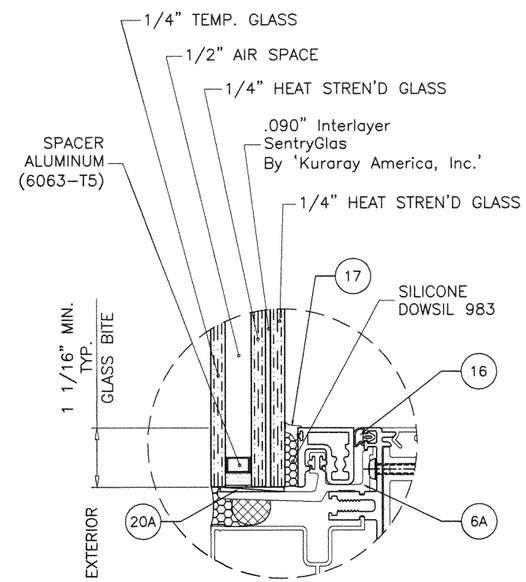

GLASS TYPE 'Ai'
1–5/16" INSUL. LAM. GLASS

GLAZING OPTIONS

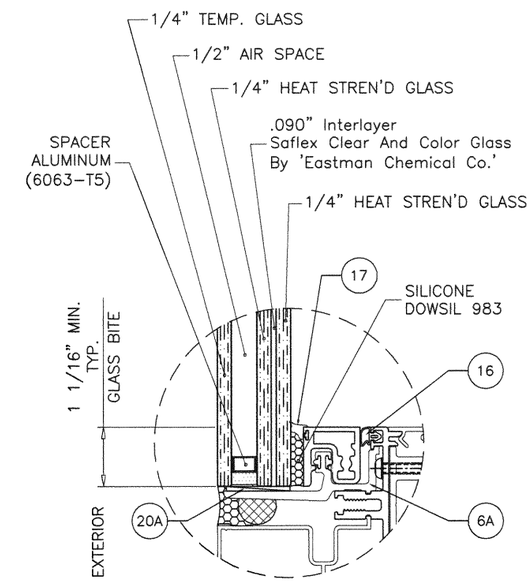

GLASS TYPE 'Bi'
1–5/16" INSUL. LAM. GLASS

(SEE ELEVATIONS ON SHEETS 3.1 & 3.2 FOR LIMITS AND DESIGN LOAD CAPACITY)

NOTE:
GLASS CAPACITIES ON THIS SHEET ARE BASED ON ASTM E1300–09 (3 SEC. GUSTS).

Sealed:8/12/2020

FL #27401

JALAL FAROOQ LICENSE No. 81223 STATE OF FLORIDA PROFESSIONAL ENGINEER

AL-FAROOQ CORPORATION
ENGINEERS & PRODUCT DEVELOPMENT
9360 SUNSET DRIVE, SUITE 220
MIAMI, FLORIDA 33173 (C.A.N. 3538)
TEL. (305) 264-8100 FAX. (305) 262-6978

COMP–ANL\19–18F–MG

SERIES 2000 STICK ALUM. CURTAIN WALL SYS. (L.M.I.)

MR-GLASS DOORS & WINDOWS MANUFACTURING, LLC
8051 N.W. 79th Place
Medley, FL. 33166
Tel. (305) 764-3963 Fax. (305) 470-8285

revisions:

no	date	by	description

date: 03–15–19
scale: –
dr. by: TARIQ
chk. by:

drawing no. 19–18F

MULLION DESIGN LOAD CAPACITY – PSF SINGLE SPANS			
NOMINAL DIMS.		JAMB 'J1' MULL 'M2'	
WIDTH (W)	FRAME HEIGHT	EXT.(+)	INT.(–)
36"	96"	85.0	85.0
42"		85.0	85.0
48"		85.0	85.0
54"		85.0	85.0
60"		85.0	85.0
66"		85.0	85.0
72"		85.0	85.0
36"	108"	85.0	85.0
42"		85.0	85.0
48"		85.0	85.0
54"		85.0	85.0
60"		85.0	85.0
66"		85.0	85.0
72"		85.0	85.0
36"	120"	85.0	85.0
42"		85.0	85.0
48"		85.0	85.0
54"		85.0	85.0
60"		85.0	85.0
66"		85.0	85.0
36"	132"	85.0	85.0
42"		85.0	85.0
48"		85.0	85.0
54"		85.0	85.0
60"		85.0	85.0
36"	144"	85.0	85.0
42"		85.0	85.0
48"		85.0	85.0
54"		80.5	80.5

INTERPOLATION BETWEEN WIDTHS ALLOWED.

MULLION DESIGN LOAD CAPACITY – PSF SINGLE SPANS					
NOMINAL DIMS.		JAMB 'J2' MULL 'M4'		JAMB 'J2' MULL 'M6'	
WIDTH (W)	FRAME HEIGHT	EXT.(+)	INT.(–)	EXT.(+)	INT.(–)
36"	120"	75.0	75.0	80.0	90.0
42"		75.0	75.0	80.0	90.0
48"		75.0	75.0	80.0	90.0
54"		75.0	75.0	80.0	90.0
60"		75.0	75.0	80.0	90.0
66"		75.0	75.0	80.0	90.0
72"		75.0	75.0	80.0	90.0
36"	132"	75.0	75.0	80.0	90.0
42"		75.0	75.0	80.0	90.0
48"		75.0	75.0	80.0	90.0
54"		75.0	75.0	80.0	90.0
60"		75.0	75.0	80.0	90.0
36"	144"	75.0	75.0	80.0	90.0
42"		75.0	75.0	80.0	90.0
48"		75.0	75.0	80.0	90.0
54"		75.0	75.0	80.0	90.0
60"		75.0	75.0	80.0	90.0
36"	156"	75.0	75.0	80.0	90.0
42"		75.0	75.0	80.0	90.0
48"		75.0	75.0	80.0	90.0
54"		75.0	75.0	80.0	90.0
60"		75.0	75.0	80.0	90.0
36"	168"	75.0	75.0	80.0	90.0
42"		75.0	75.0	80.0	90.0
48"		75.0	75.0	80.0	90.0
54"		75.0	75.0	80.0	90.0
60"		–	–	80.0	90.0
36"	180"	75.0	75.0	80.0	90.0
42"		75.0	75.0	80.0	90.0
48"		75.0	75.0	80.0	90.0
54"		73.3	73.3	80.0	90.0
60"		–	–	80.0	90.0
36"	192"	–	–	80.0	90.0
42"		–	–	80.0	90.0
48"		–	–	80.0	90.0
54"		–	–	80.0	90.0
36"	204"	–	–	80.0	90.0
42"		–	–	80.0	90.0
48"		–	–	80.0	90.0
54"		–	–	80.0	80.0

INTERPOLATION BETWEEN WIDTHS ALLOWED.

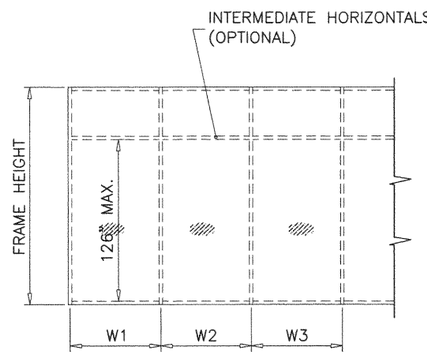

WIDTH (W) = W1
AT JAMB

WIDTH (W) = $\frac{W2 + W3}{2}$
AT MULLION

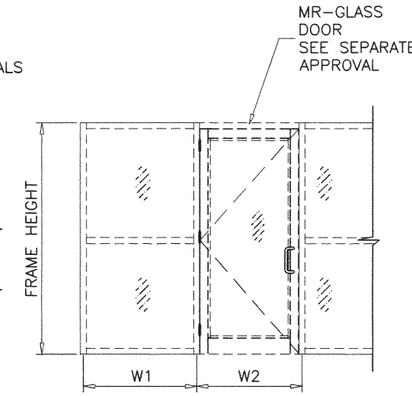

WIDTH (W) = $\frac{W1 + W2}{2}$
AT MULLION

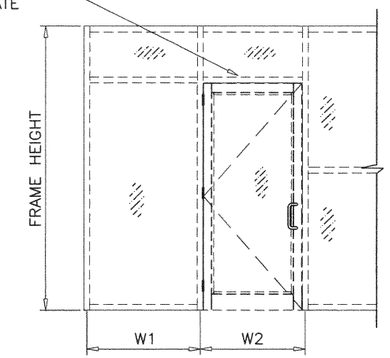

WIDTH (W) = $\frac{W1 + W2}{2}$
AT MULLION

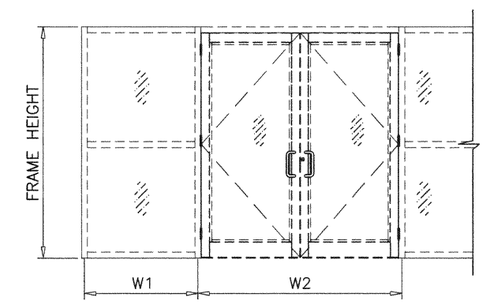

WIDTH (W) = $\frac{W1}{2} + \frac{W2}{4}$
AT MULLION

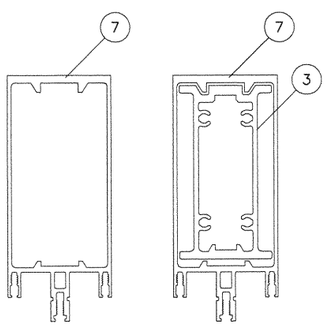

JAMB 'J1'

MULLION 'M2'

Ix IN^4	Sx IN^3
13.52	3.96

Ix IN^4	Sx IN^3
21.32	5.79

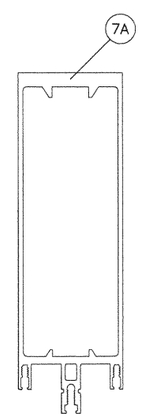

JAMB 'J2'
MULLION 'M4'

Ix IN^4	Sx IN^3
41.55	8.36

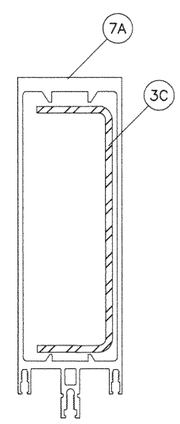

MULLION 'M6'

	Ix IN^4	Sx IN^3
ALUMINUM	41.55	8.36
STEEL	10.18	3.13
TOTAL Ix ALUM + Ix STL X 2.9	71.1	

Sealed:8/12/2020

FL #27401

JALAL FAROOQ LICENSE No. 81223 STATE OF FLORIDA PROFESSIONAL ENGINEER

AL-FAROOQ CORPORATION
ENGINEERS & PRODUCT DEVELOPMENT
9360 SUNSET DRIVE, SUITE 220
MIAMI, FLORIDA 33173 (C.A.N. 3538)
TEL. (305) 264-8100 FAX. (305) 262-6978

COMP–ANL\19–18F–MG

SERIES 2000 STICK ALUM. CURTAIN WALL SYS. (L.M.I.)

MR–GLASS DOORS & WINDOWS MANUFACTURING, LLC
8051 N.W. 79th Place
Medley, FL. 33166
Tel. (305) 764–3963 Fax. (305) 470–8285

revisions:			
no	date	by	description

date: 03–15–19
scale: –
dr. by: TARIQ
chk. by:

drawing no. 19–18F

sheet 5 of 21

MULLION DESIGN LOAD CAPACITY – PSF EQUAL LENGTHS TWO OR MULTIPLE SPANS			
NOMINAL DIMS.		JAMB 'J1' MULL 'M2'	
WIDTH (W)	SPAN (L)	EXT.(+)	INT.(–)
36"	96"	85.0	85.0
42"		85.0	85.0
48"		85.0	85.0
54"		85.0	85.0
60"		85.0	85.0
66"		85.0	85.0
72"		85.0	85.0
36"	108"	85.0	85.0
42"		85.0	85.0
48"		85.0	85.0
54"		85.0	85.0
60"		85.0	85.0
66"		85.0	85.0
72"		85.0	85.0
36"	120"	85.0	85.0
42"		85.0	85.0
48"		85.0	85.0
54"		85.0	85.0
60"		85.0	85.0
66"		85.0	85.0
36"	132"	85.0	85.0
42"		85.0	85.0
48"		85.0	85.0
54"		85.0	85.0
60"		85.0	85.0
36"	144"	85.0	85.0
42"		85.0	85.0
48"		85.0	85.0
54"		80.5	80.5

INTERPOLATION BETWEEN WIDTHS ALLOWED.

MULLION DESIGN LOAD CAPACITY – PSF EQUAL LENGTHS TWO OR MULTIPLE SPANS					
NOMINAL DIMS.		JAMB 'J2' MULL 'M4'		JAMB 'J2' MULL 'M6'	
WIDTH (W)	SPAN (L)	EXT.(+)	INT.(–)	EXT.(+)	INT.(–)
36"	120"	75.0	75.0	80.0	90.0
42"		75.0	75.0	80.0	90.0
48"		75.0	75.0	80.0	90.0
54"		75.0	75.0	80.0	90.0
60"		75.0	75.0	80.0	90.0
66"		75.0	75.0	80.0	90.0
72"		75.0	75.0	80.0	90.0
36"	132"	75.0	75.0	80.0	90.0
42"		75.0	75.0	80.0	90.0
48"		75.0	75.0	80.0	90.0
54"		75.0	75.0	80.0	90.0
60"		75.0	75.0	80.0	90.0
36"	144"	75.0	75.0	80.0	90.0
42"		75.0	75.0	80.0	90.0
48"		75.0	75.0	80.0	90.0
54"		75.0	75.0	80.0	90.0
60"		75.0	75.0	80.0	90.0
36"	156"	75.0	75.0	80.0	90.0
42"		75.0	75.0	80.0	90.0
48"		75.0	75.0	80.0	90.0
54"		75.0	75.0	80.0	90.0
60"		75.0	75.0	80.0	90.0
36"	168"	75.0	75.0	80.0	90.0
42"		75.0	75.0	80.0	90.0
48"		75.0	75.0	80.0	90.0
54"		75.0	75.0	80.0	90.0
60"		–	–	80.0	90.0
36"	180"	75.0	75.0	80.0	90.0
42"		75.0	75.0	80.0	90.0
48"		75.0	75.0	80.0	90.0
54"		73.3	73.3	80.0	90.0
60"		–	–	80.0	90.0
36"	192"	–	–	80.0	90.0
42"		–	–	80.0	90.0
48"		–	–	80.0	90.0
54"		–	–	80.0	90.0
36"	204"	–	–	80.0	90.0
42"		–	–	80.0	90.0
48"		–	–	80.0	90.0
54"		–	–	80.0	80.0

INTERPOLATION BETWEEN WIDTHS ALLOWED.

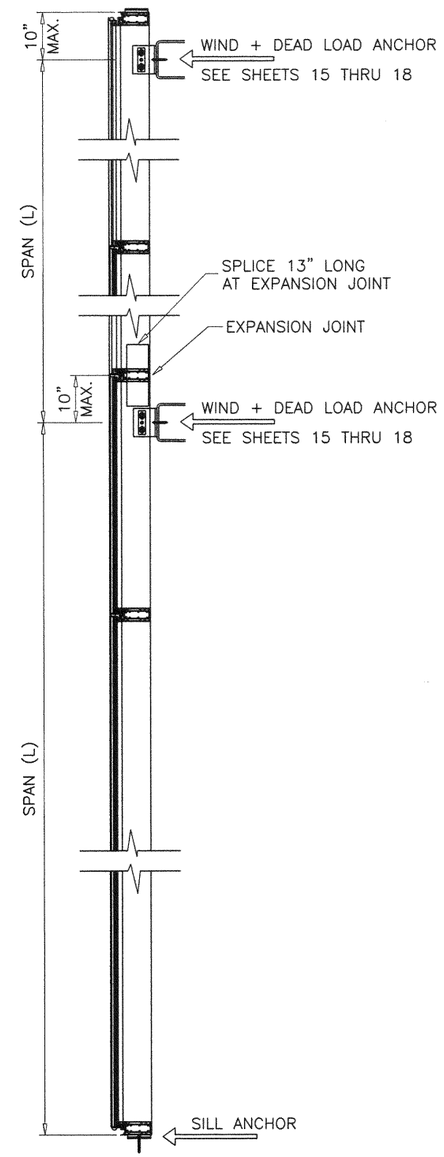

TWO SPANS

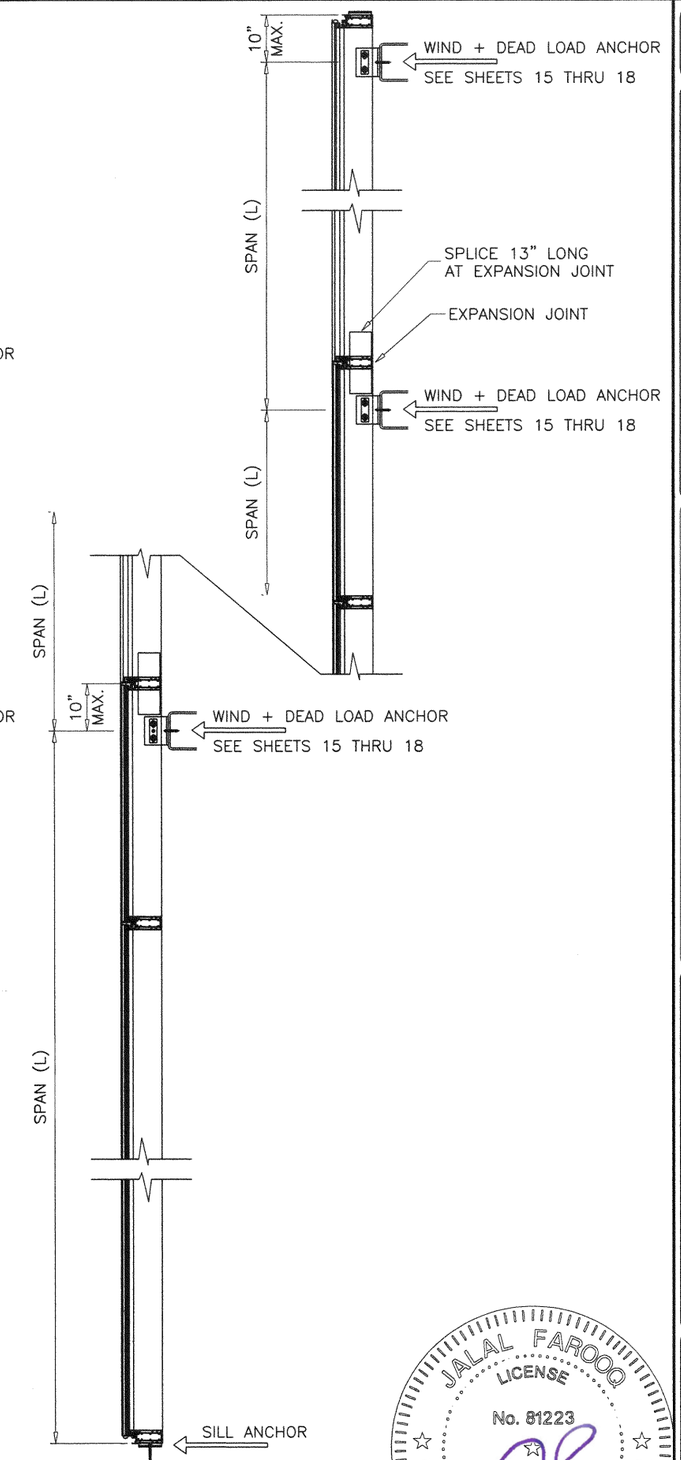

MULTIPLE SPANS

NOTE:
UNEQUAL SPANS TO BE CHECKED ON JOB TO JOB BASIS.

Sealed:8/12/2020

JALAL FAROOQ
LICENSE
No. 81223
STATE OF FLORIDA
PROFESSIONAL ENGINEER

FL #27401

AL-FAROOQ CORPORATION
ENGINEERS & PRODUCT DEVELOPMENT
9360 SUNSET DRIVE, SUITE 220
MIAMI, FLORIDA 33173 (C.A.N. 3538)
TEL. (305) 264-8100 FAX. (305) 262-6978

COMP-ANL\19-18F-MG

SERIES 2000 STICK ALUM. CURTAIN WALL SYS. (L.M.I.)

MR-GLASS DOORS & WINDOWS MANUFACTURING, LLC
8051 N.W. 79th Place
Medley, FL. 33166
Tel. (305) 764-3963 Fax. (305) 470-8285

revisions:			
no	date	by	description

date: 03-15-19
scale: –
dr. by: TARIQ
chk. by:

drawing no.
19-18F

MULLION DESIGN LOAD CAPACITY – PSF TWO SPANS & MULTIPLE SPANS			
NOMINAL DIMS.		JAMB 'J1' MULL 'M6'	
WIDTH (W)	SPAN (L)	EXT.(+)	INT.(–)
42"	120"	90.0	90.0
48"		90.0	90.0
54"		90.0	90.0
60"		90.0	90.0
42"	126"	90.0	90.0
48"		90.0	90.0
54"		90.0	90.0
60"		90.0	90.0
42"	132"	90.0	90.0
48"		90.0	90.0
54"		90.0	90.0
60"		90.0	90.0
42"	144"	90.0	90.0
48"		90.0	90.0
54"		90.0	90.0
60"		86.0	86.0

MULLION DESIGN LOAD CAPACITY – PSF TWO SPANS & MULTIPLE SPANS			
NOMINAL DIMS.		JAMB 'J2' MULL 'M4'	
WIDTH (W)	SPAN (L)	EXT.(+)	INT.(–)
42"	120"	90.0	90.0
48"		90.0	90.0
54"		90.0	90.0
60"		90.0	90.0
42"	126"	90.0	90.0
48"		90.0	90.0
54"		90.0	90.0
60"		90.0	90.0
42"	132"	90.0	90.0
48"		90.0	90.0
54"		90.0	90.0
60"		90.0	90.0
42"	144"	90.0	90.0
48"		90.0	90.0
54"		90.0	90.0
60"		90.0	90.0

INTERPOLATION BETWEEN WIDTHS ALLOWED.

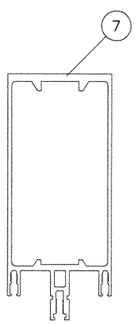

JAMB 'J1'

Ix IN^4	Sx IN^3
13.52	3.96

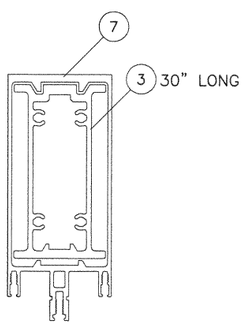

MULLION 'M6'

Ix IN^4	Sx IN^3
21.32	5.79

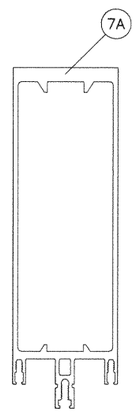

JAMB 'J2'
MULLION 'M4'

Ix IN^4	Sx IN^3
41.55	8.36

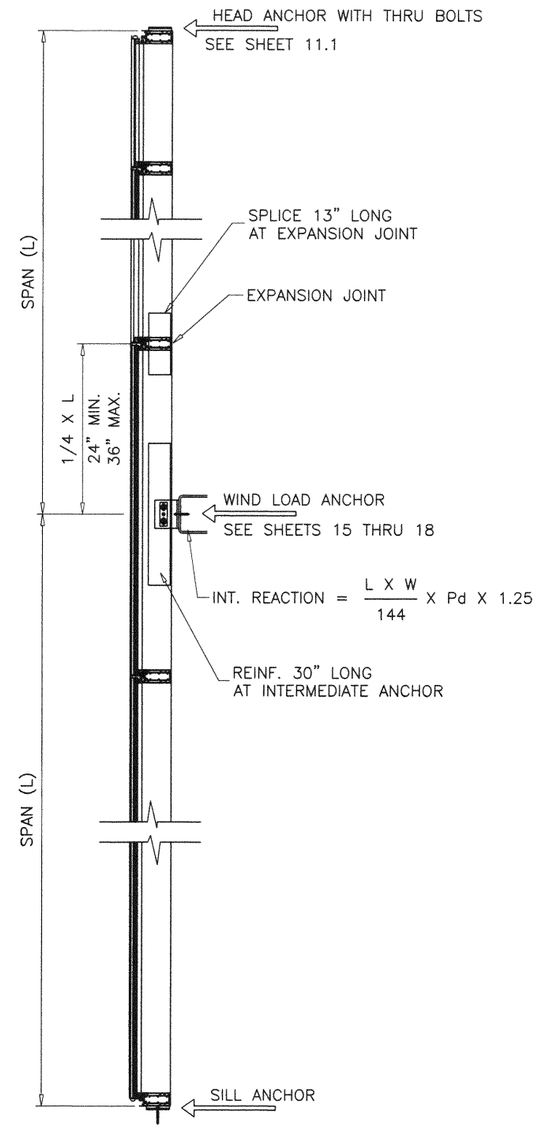

TWO SPANS WITH EXPANSION JOINTS

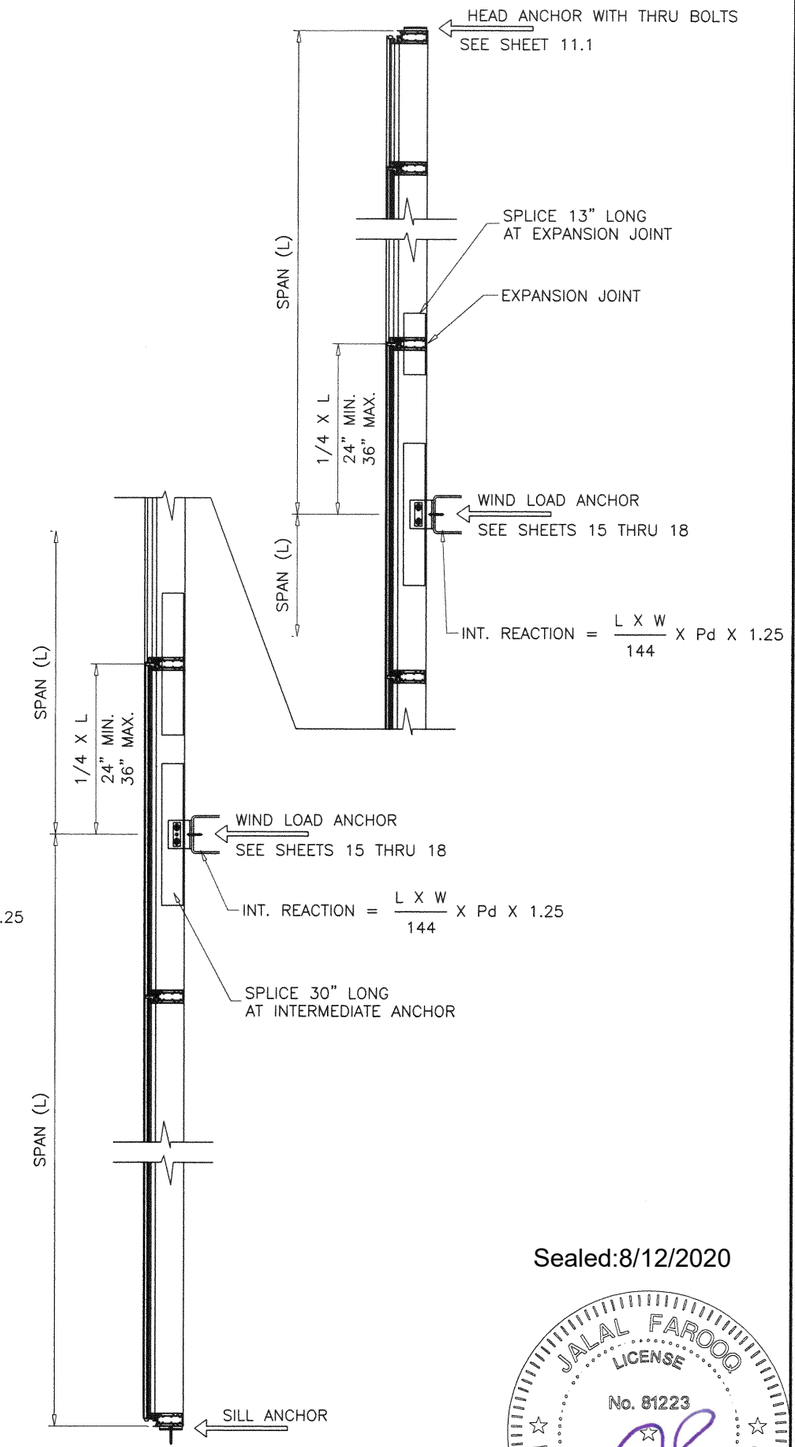

MULTIPLE SPANS WITH EXPANSION JOINTS

NOTE:
UNEQUAL SPANS TO BE CHECKED ON JOB TO JOB BASIS.

Sealed:8/12/2020

JALAL FAROOQ
LICENSE
No. 81223
STATE OF FLORIDA
PROFESSIONAL ENGINEER

FL #27401

AL-FAROOQ CORPORATION
ENGINEERS & PRODUCT DEVELOPMENT
9360 SUNSET DRIVE, SUITE 220
MIAMI, FLORIDA 33173 (C.A.N. 3538)
TEL. (305) 264-8100 FAX. (305) 262-6978
COMP-ANL\19-18F-MG

SERIES 2000 STICK ALUM. CURTAIN WALL SYS. (L.M.I.)

MR-GLASS DOORS & WINDOWS MANUFACTURING, LLC
8051 N.W. 79th Place
Medley, FL. 33166
Tel. (305) 764-3963 Fax. (305) 470-8285

revisions:			
no	date	by	description

date: 03-15-19
scale: –
dr. by: TARIQ
chk. by:

drawing no. 19-18F

MULLION DESIGN LOAD CAPACITY – PSF TWO SPANS & MULTIPLE SPANS			
NOMINAL DIMS.		JAMB 'J1' MULL 'M6'	
WIDTH (W)	SPAN (L)	EXT.(+)	INT.(–)
42"	120"	90.0	90.0
48"		90.0	90.0
54"		90.0	90.0
60"		90.0	90.0
42"	126"	90.0	90.0
48"		90.0	90.0
54"		90.0	90.0
60"		90.0	90.0
42"	132"	90.0	90.0
48"		90.0	90.0
54"		90.0	90.0
60"		90.0	90.0
42"	144"	90.0	90.0
48"		90.0	90.0
54"		90.0	90.0
60"		86.0	86.0

MULLION DESIGN LOAD CAPACITY – PSF TWO SPANS & MULTIPLE SPANS			
NOMINAL DIMS.		JAMB 'J2' MULL 'M4'	
WIDTH (W)	SPAN (L)	EXT.(+)	INT.(–)
42"	120"	90.0	90.0
48"		90.0	90.0
54"		90.0	90.0
60"		90.0	90.0
42"	126"	90.0	90.0
48"		90.0	90.0
54"		90.0	90.0
60"		90.0	90.0
42"	132"	90.0	90.0
48"		90.0	90.0
54"		90.0	90.0
60"		90.0	90.0
42"	144"	90.0	90.0
48"		90.0	90.0
54"		90.0	90.0
60"		90.0	90.0

INTERPOLATION BETWEEN WIDTHS ALLOWED.

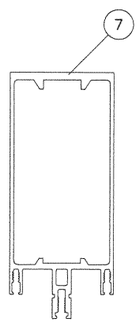

JAMB 'J1'

Ix IN^4	Sx IN^3
13.52	3.96

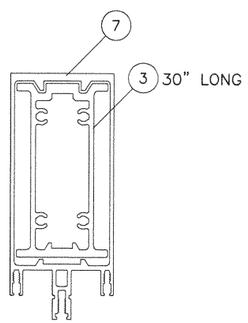

MULLION 'M6'

Ix IN^4	Sx IN^3
21.32	5.79

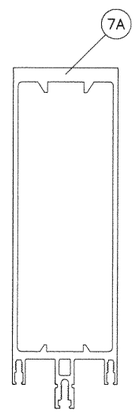

JAMB 'J2'
MULLION 'M4'

Ix IN^4	Sx IN^3
41.55	8.36

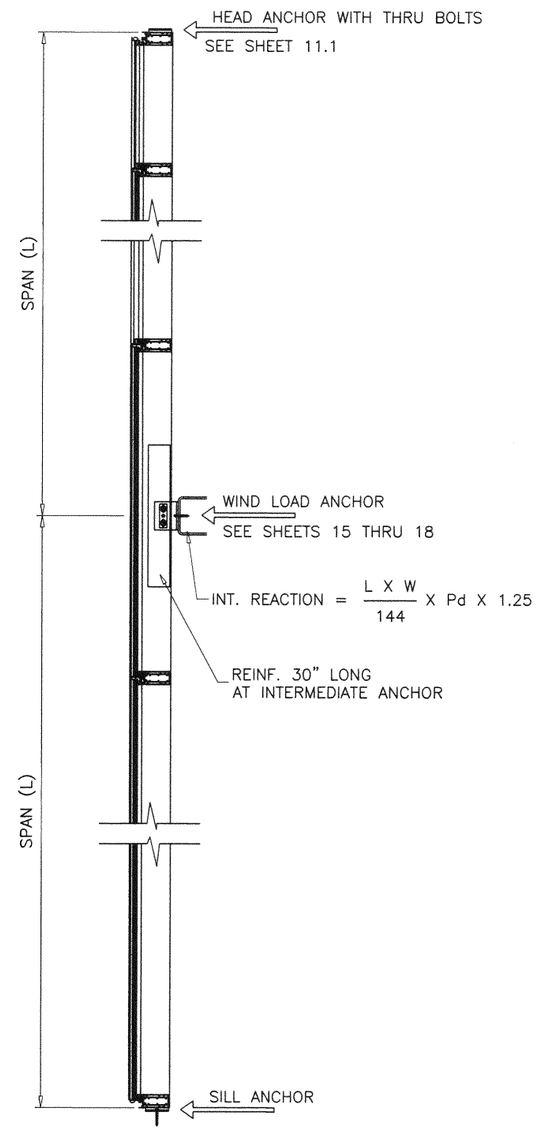

TWO SPANS WITHOUT EXPANSION JOINTS

NOTE:
UNEQUAL SPANS TO BE CHECKED ON JOB TO JOB BASIS.

Sealed:8/12/2020

JALAL FAROOQ
LICENSE
No. 81223
STATE OF FLORIDA
PROFESSIONAL ENGINEER

FL #27401

AL-FAROOQ CORPORATION
ENGINEERS & PRODUCT DEVELOPMENT
9360 SUNSET DRIVE, SUITE 220
MIAMI, FLORIDA 33173 (C.A.N. 3538)
TEL. (305) 264-8100 FAX. (305) 262-6978

COMP-ANL\19-18F-MG

SERIES 2000 STICK ALUM. CURTAIN WALL SYS. (L.M.I.)

MR-GLASS DOORS & WINDOWS MANUFACTURING, LLC
8051 N.W. 79th Place
Medley, FL. 33166
Tel. (305) 764-3963 Fax. (305) 470-8285

revisions:			
no	date	by	description

date: 03-15-19
scale: –
dr. by: TARIQ
chk. by:

drawing no. 19-18F

sheet 6.1 of 21

DOOR MULLION LOAD CAPACITY – PSF						
NOMINAL DIMS.			MULL 'DM1'		MULL 'DM2'	
SIDELITE WIDTH INCHES	FRAME HEIGHT INCHES	DOOR HEIGHT INCHES	EXT.(+)	INT.(–)	EXT.(+)	INT.(–)
36	120	84	85.0	85.0	80.0	90.0
42			85.0	85.0	80.0	90.0
48			85.0	85.0	80.0	90.0
54			85.0	85.0	80.0	90.0
60			85.0	85.0	80.0	90.0
36	144		82.7	82.7	80.0	90.0
42			78.5	78.5	80.0	90.0
48			74.7	74.7	80.0	90.0
54			71.2	71.2	80.0	90.0
60			68.0	68.0	80.0	90.0
36	156		–	–	80.0	90.0
42			–	–	80.0	90.0
48			–	–	80.0	90.0
54			–	–	80.0	90.0
60			–	–	80.0	90.0
36	168		–	–	80.0	90.0
42			–	–	80.0	90.0
48			–	–	80.0	90.0
54			–	–	80.0	90.0
60			–	–	80.0	90.0
36	174		–	–	80.0	90.0
42			–	–	80.0	90.0
48			–	–	80.0	90.0
54			–	–	80.0	90.0
36	120	90	85.0	85.0	80.0	90.0
42			85.0	85.0	80.0	90.0
48			85.0	85.0	80.0	90.0
54			85.0	85.0	80.0	90.0
60			85.0	85.0	80.0	90.0
36	144		83.7	83.7	80.0	90.0
42			79.4	79.4	80.0	90.0
48			75.5	75.5	80.0	90.0
54			71.9	71.9	80.0	90.0
60			68.7	68.7	80.0	90.0
36	156		–	–	80.0	90.0
42			–	–	80.0	90.0
48			–	–	80.0	90.0
54			–	–	80.0	90.0
60			–	–	80.0	90.0
36	168		–	–	80.0	90.0
42			–	–	80.0	90.0
48			–	–	80.0	90.0
54			–	–	80.0	90.0
60			–	–	80.0	90.0
36	174		–	–	80.0	90.0
42			–	–	80.0	90.0
48			–	–	80.0	90.0
54			–	–	80.0	90.0

DOOR MULLION LOAD CAPACITY – PSF						
NOMINAL DIMS.			MULL 'DM1'		MULL 'DM2'	
SIDELITE WIDTH INCHES	FRAME HEIGHT INCHES	DOOR HEIGHT INCHES	EXT.(+)	INT.(–)	EXT.(+)	INT.(–)
36	120	98	85.0	85.0	80.0	90.0
42			85.0	85.0	80.0	90.0
48			85.0	85.0	80.0	90.0
54			85.0	85.0	80.0	90.0
60			85.0	85.0	80.0	90.0
36	144		85.0	85.0	80.0	90.0
42			81.2	81.2	80.0	90.0
48			77.1	77.1	80.0	90.0
54			73.4	73.4	80.0	90.0
60			70.1	70.1	80.0	90.0
36	156		–	–	80.0	90.0
42			–	–	80.0	90.0
48			–	–	80.0	90.0
54			–	–	80.0	90.0
60			–	–	80.0	90.0
36	168		–	–	80.0	90.0
42			–	–	80.0	90.0
48			–	–	80.0	90.0
54			–	–	80.0	90.0
60			–	–	80.0	90.0
36	174		–	–	80.0	90.0
42			–	–	80.0	90.0
48			–	–	80.0	90.0
54			–	–	80.0	90.0

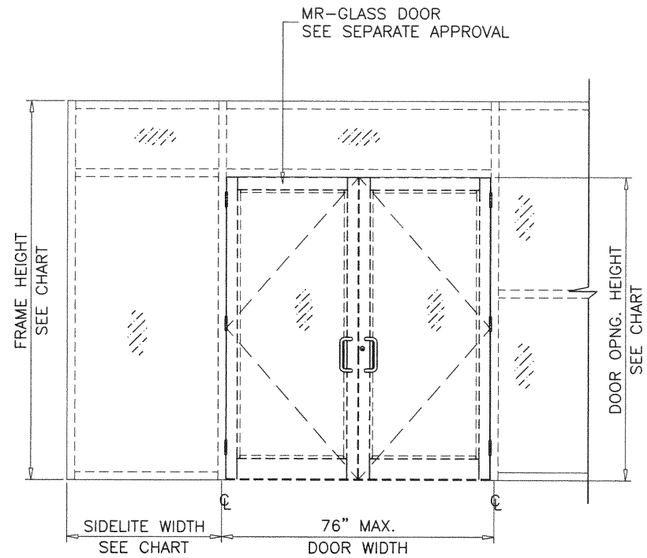

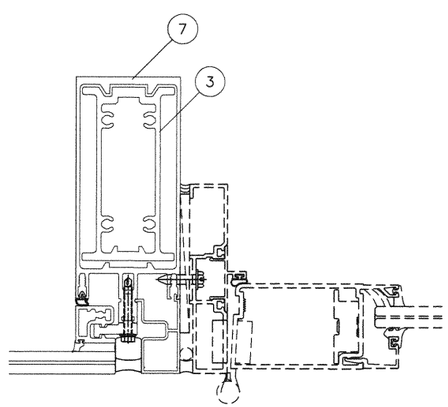

MULLION 'DM1'

Ix IN^4	Sx IN^3
21.32	5.79

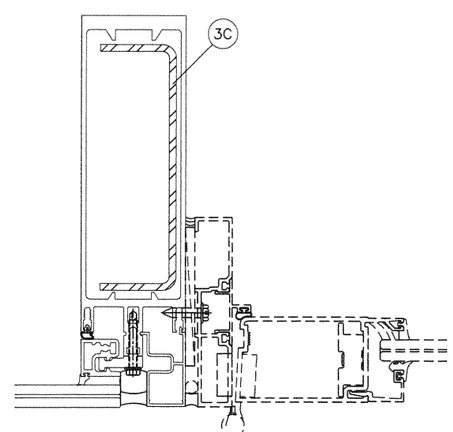

MULLION 'DM2'

	Ix IN^4	Sx IN^3
ALUMINUM	41.55	8.36
STEEL	10.18	3.13
TOTAL Ix ALUM + Ix STL X 2.9	71.1	

Sealed:8/12/2020

JALAL FAROOQ
LICENSE
No. 81223
STATE OF FLORIDA
PROFESSIONAL ENGINEER

FL #27401

AL-FAROOQ CORPORATION
ENGINEERS & PRODUCT DEVELOPMENT
9360 SUNSET DRIVE, SUITE 220
MIAMI, FLORIDA 33173 (C.A.N. 3538)
TEL. (305) 264-8100 FAX. (305) 262-6978

COMP–ANL\19–18F–MG

SERIES 2000 STICK ALUM. CURTAIN WALL SYS. (L.M.I.)

MR-GLASS DOORS & WINDOWS MANUFACTURING, LLC
8051 N.W. 79th Place
Medley, FL. 33166
Tel. (305) 764-3963 Fax. (305) 470-8285

revisions:

no	date	by	description

date: 03-15-19
scale: –
dr. by: TARIQ
chk. by:

drawing no.
19–18F

HEAD/SILL ANCHOR DESIGN LOAD CAPACITY – PSF

EXT.(+) & INT.(–)

NOMINAL DIMS.		ANCHOR TYPE 'A'			ANCHOR TYPE 'B'				ANCHOR TYPE 'C'
		'F' CLIP INTO CONC.	'T' CLIP INTO CONC.		'JAMB PLATE' INTO CONC.		'MULLION PLATE' INTO CONC.		'F' CLIP, 'T' CLIP 'JAMB, MULLION PLATE'
WIDTH (W)	FRAME HEIGHT	4000 PSI	4000 PSI	6000 PSI	4000 PSI	6000 PSI	4000 PSI	6000 PSI	
36"	126"	100.0	100.0	100.0	100.0	100.0	100.0	100.0	100.0
42"		100.0	100.0	100.0	100.0	100.0	100.0	100.0	100.0
48"		100.0	100.0	100.0	100.0	100.0	100.0	100.0	100.0
54"		100.0	100.0	100.0	100.0	100.0	100.0	100.0	100.0
60"		100.0	100.0	100.0	100.0	100.0	100.0	100.0	100.0
66"		100.0	100.0	100.0	100.0	100.0	100.0	100.0	100.0
72"		100.0	100.0	100.0	100.0	100.0	100.0	100.0	100.0
36"	132"	100.0	100.0	100.0	100.0	100.0	100.0	100.0	100.0
42"		100.0	100.0	100.0	100.0	100.0	100.0	100.0	100.0
48"		100.0	100.0	100.0	100.0	100.0	100.0	100.0	100.0
54"		100.0	100.0	100.0	100.0	100.0	100.0	100.0	100.0
60"		100.0	100.0	100.0	100.0	100.0	100.0	100.0	100.0
66"		100.0	100.0	100.0	100.0	100.0	100.0	100.0	100.0
36"	144"	100.0	100.0	100.0	100.0	100.0	100.0	100.0	100.0
42"		100.0	100.0	100.0	100.0	100.0	100.0	100.0	100.0
48"		100.0	100.0	100.0	100.0	100.0	100.0	100.0	100.0
54"		100.0	100.0	100.0	100.0	100.0	100.0	100.0	100.0
60"		100.0	92.0	100.0	100.0	100.0	100.0	100.0	100.0
66"		100.0	–	100.0	100.0	100.0	100.0	100.0	100.0
36"	156"	100.0	100.0	100.0	100.0	100.0	100.0	100.0	100.0
42"		100.0	100.0	100.0	100.0	100.0	100.0	100.0	100.0
48"		100.0	100.0	100.0	100.0	100.0	100.0	100.0	100.0
54"		100.0	94.4	100.0	100.0	100.0	100.0	100.0	100.0
60"		100.0	84.9	100.0	100.0	100.0	100.0	100.0	100.0
66"		100.0	–	100.0	100.0	100.0	100.0	100.0	100.0
36"	168"	100.0	100.0	100.0	100.0	100.0	100.0	100.0	100.0
42"		100.0	100.0	100.0	100.0	100.0	100.0	100.0	100.0
48"		100.0	98.6	100.0	100.0	100.0	100.0	100.0	100.0
54"		100.0	87.6	100.0	100.0	100.0	100.0	100.0	100.0
60"		100.0	78.9	96.0	100.0	100.0	94.3	100.0	100.0
66"		100.0	–	–	100.0	100.0	–	100.0	100.0
36"	180"	100.0	100.0	100.0	100.0	100.0	100.0	100.0	100.0
42"		100.0	100.0	100.0	100.0	100.0	100.0	100.0	100.0
48"		100.0	92.0	100.0	100.0	100.0	100.0	100.0	100.0
54"		100.0	81.8	99.6	100.0	100.0	97.8	100.0	100.0
60"		100.0	69.0	84.0	90.0	100.0	82.5	100.0	100.0
36"	192"	100.0	100.0	100.0	100.0	100.0	100.0	100.0	100.0
42"		100.0	98.6	100.0	100.0	100.0	100.0	100.0	100.0
48"		100.0	86.3	100.0	100.0	100.0	100.0	100.0	100.0
54"		100.0	76.7	93.3	100.0	100.0	91.7	100.0	100.0
36"	204"	100.0	100.0	100.0	100.0	100.0	100.0	100.0	100.0
42"		100.0	92.8	100.0	100.0	100.0	100.0	100.0	100.0
48"		100.0	81.2	98.8	100.0	100.0	97.1	100.0	100.0
54"		100.0	72.2	87.8	94.1	100.0	86.3	100.0	100.0

METAL STRUCTURE NOT BY 'MR-GLASS'
MUST SUSTAIN LOADS IMPOSED BY GLAZING SYSTEM
AND TRANSFER THEM TO THE BUILDING STRUCTURE.

TYPICAL ANCHORS: SEE SHEETS 13 & 14 FOR DETAILS

TYPE 'A'– 1/2" DIA. KWIK HUS-EZ ANCHOR BY 'HILTI'

INTO 4000 OR 6000 PSI MIN. CONCRETE (SEE CHART)
4-1/4" MIN. EMBED
7" MIN. CENTERLINE-TO-CENTERLINE SPACING
4-1/2" MIN. EDGE DISTANCE

TYPE 'B'– 1/2" DIA. KWIK HUS-EZ ANCHOR BY 'HILTI'

INTO 4000 OR 6000 PSI MIN. CONCRETE (SEE CHART)
4-1/4" MIN. EMBED
5-3/4" MIN. CENTERLINE-TO-CENTERLINE SPACING
5-1/2" MIN. EDGE DISTANCE

TYPE 'C'– 1/2" DIA. MACHINE SCREWS (GRADE 5 CRS)

INTO STEEL STRUCTURES
1/8" THK. MIN. (Fy = 36 KSI MIN.)
(3) THREADS MIN. TO EXTEND BEYOND METAL THICKNESS
(STEEL IN CONTACT WITH ALUMINUM TO BE PLATED OR PAINTED)

NOTE:
ANCHOR TORQUED AND OTHERWISE INSTALLED AS
PER MANUFACTURER SPECIFICATIONS.

Sealed:8/12/2020

JALAL FAROOQ LICENSE No. 81223 STATE OF FLORIDA PROFESSIONAL ENGINEER

FL #27401

AL-FAROOQ CORPORATION
ENGINEERS & PRODUCT DEVELOPMENT
9360 SUNSET DRIVE, SUITE 220
MIAMI, FLORIDA 33173 (C.A.N. 3538)
TEL. (305) 264-8100 FAX. (305) 262-6978

COMP-ANL\19-18F-MG

SERIES 2000 STICK ALUM. CURTAIN WALL SYS. (L.M.I.)

MR-GLASS DOORS & WINDOWS MANUFACTURING, LLC
8051 N.W. 79th Place
Medley, FL. 33166
Tel. (305) 764-3963 Fax. (305) 470-8285

revisions:			
no	date	by	description

date: 03-15-19
scale: –
dr. by: TARIQ
chk. by:

drawing no. 19-18F

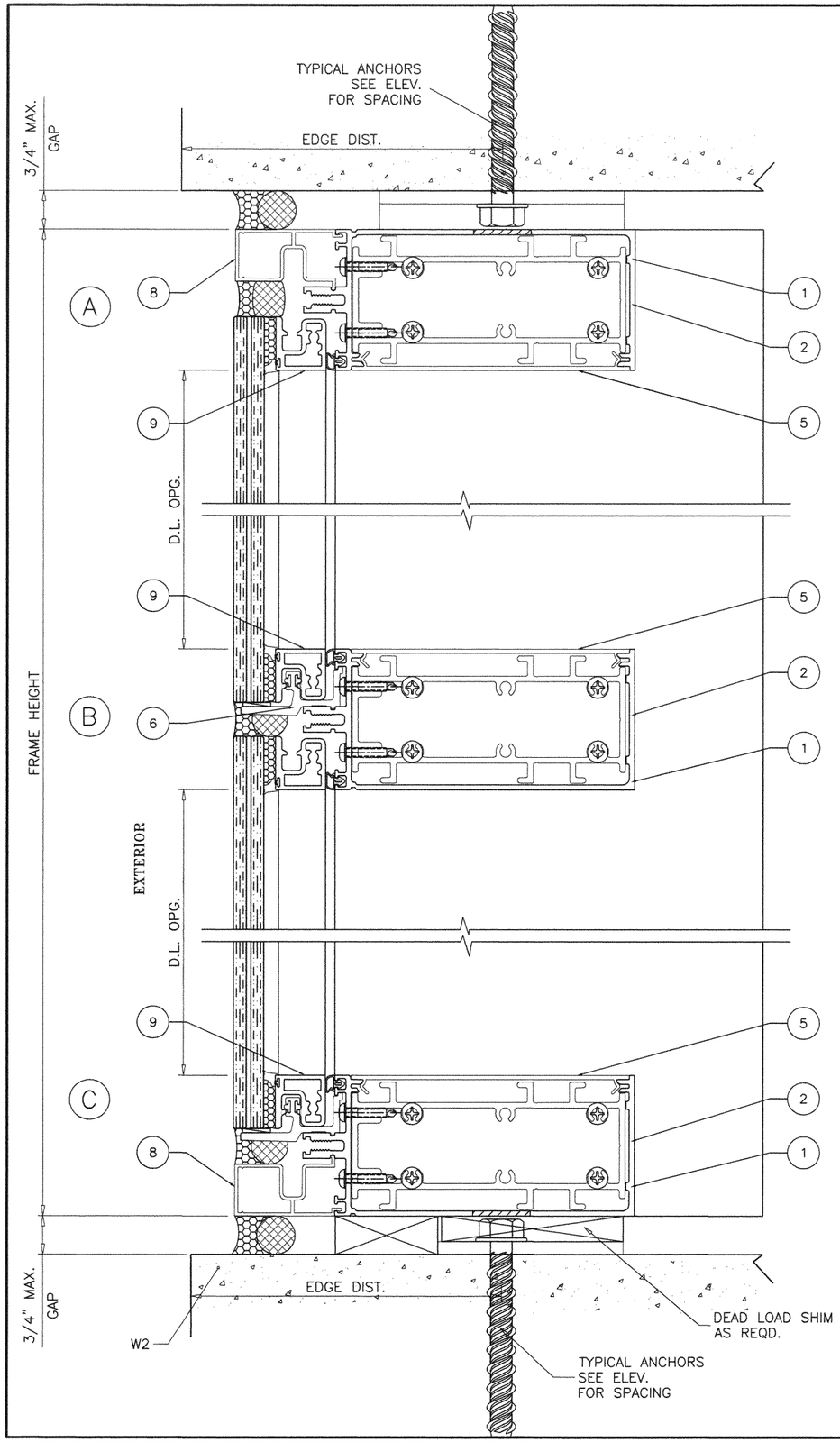

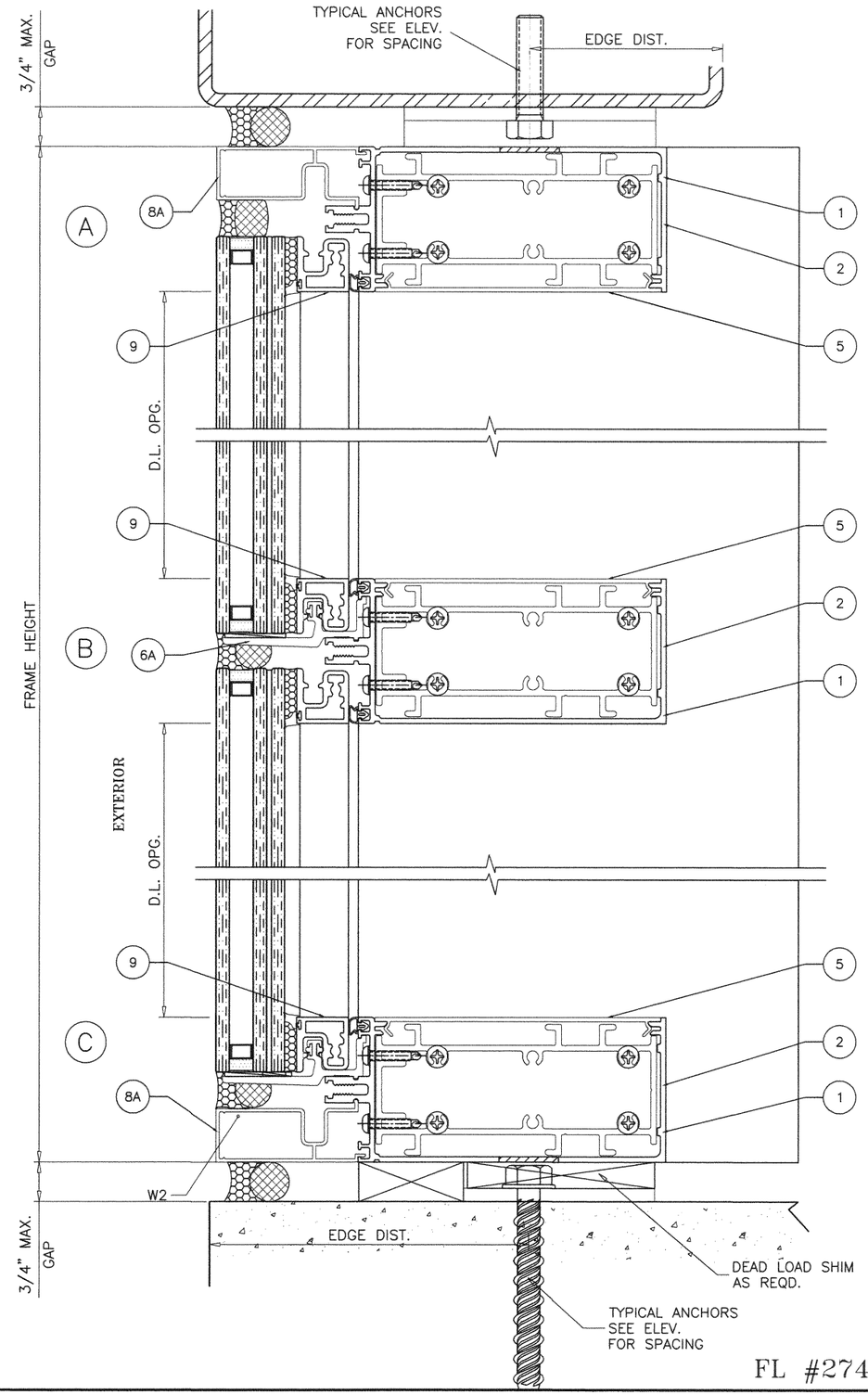

Sealed:8/12/2020

JALAL FAROOQ
LICENSE
No. 81223
STATE OF FLORIDA
PROFESSIONAL ENGINEER

FL #27401

AL-FAROOQ CORPORATION
ENGINEERS & PRODUCT DEVELOPMENT
9360 SUNSET DRIVE, SUITE 220
MIAMI, FLORIDA 33173 (C.A.N. 3538)
TEL. (305) 264-8100 FAX. (305) 262-6978

COMP-ANL\19-18F-MG

SERIES 2000 STICK ALUM. CURTAIN WALL SYS. (L.M.I.)

MR-GLASS DOORS & WINDOWS MANUFACTURING, LLC
8051 N.W. 79th Place
Medley, FL. 33166
Tel. (305) 764-3963 Fax. (305) 470-8285

revisions:			
no	date	by	description

date: 03-15-19
scale: 3/8" = 1"
dr. by: TARIQ
chk. by:

drawing no.
19-18F

sheet 9 of 21

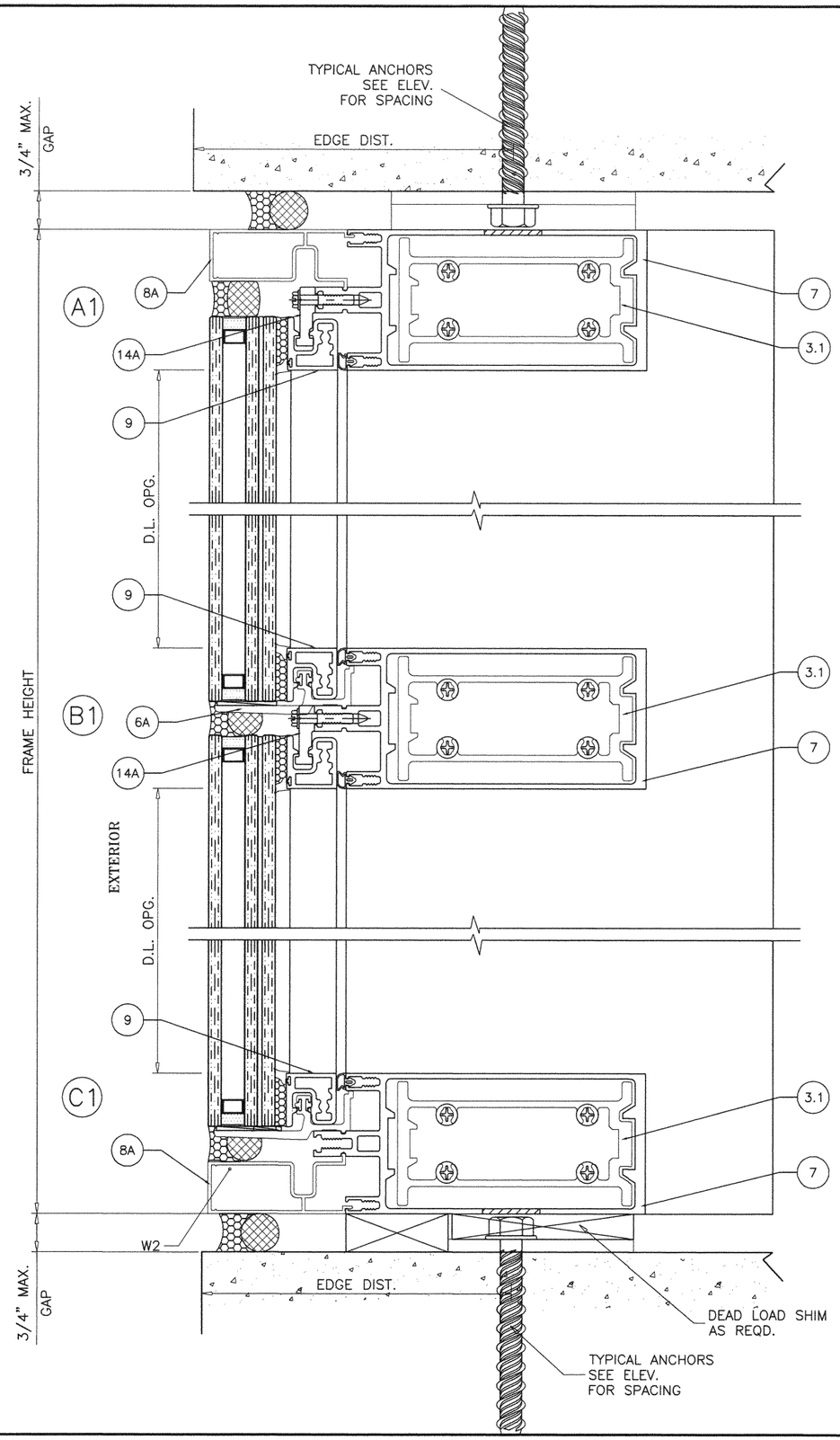

Sealed:8/12/2020

FL #27401

JALAL FAROOQ
LICENSE
No. 81223
STATE OF FLORIDA
PROFESSIONAL ENGINEER

AL-FAROOQ CORPORATION
ENGINEERS & PRODUCT DEVELOPMENT
9360 SUNSET DRIVE, SUITE 220
MIAMI, FLORIDA 33173 *(C.A.N. 3538)*
TEL. (305) 264-8100 FAX. (305) 262-6978

COMP-ANL\19-18F-MG

SERIES 2000 STICK ALUM. CURTAIN WALL SYS. (L.M.I.)

MR-GLASS DOORS & WINDOWS MANUFACTURING, LLC
8051 N.W. 79th Place
Medley, FL. 33166
Tel. (305) 764-3963 Fax. (305) 470-8285

revisions:			
no	date	by	description

date: 03-15-19
scale: 3/8" = 1"
dr. by: TARIQ
chk. by:

drawing no. 19-18F

sheet 9.1of 21

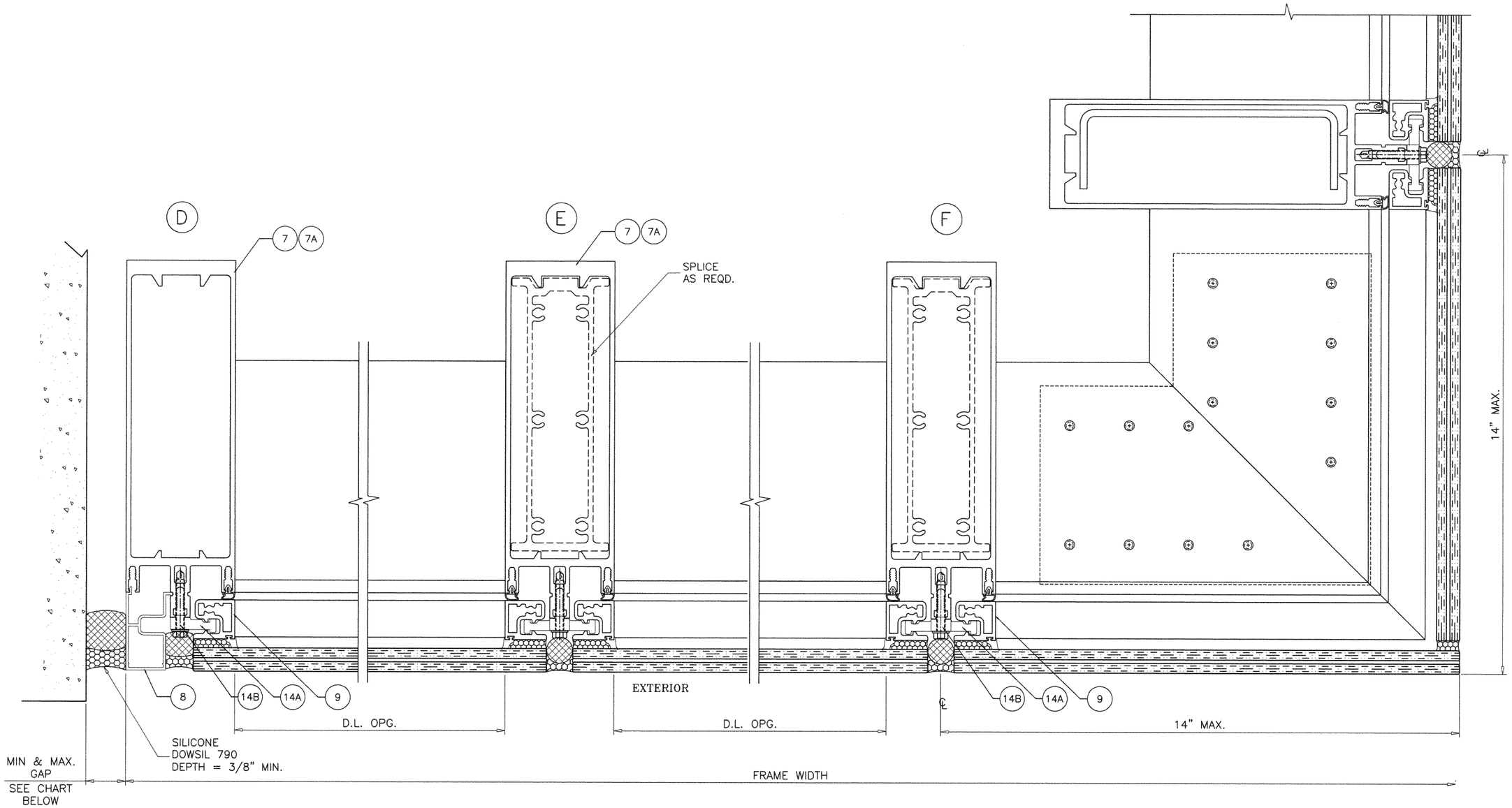

MAX. FRAME HEIGHT	GAP	
	MIN.	MAX.
180"	1/2"	3/4"
204"	5/8"	3/4"

NOTE:
MAX. MOVEMENT CONSIDERED=100% STRETCH.
PLEASE REFER TO SEALANT MANUFACTURER'S DATA AND APPLICATION MANUAL FOR COMPATABILITY OF SEALANT TO SUBSTRATE & WINDOWALL MATERIAL/FINISH AND COMPLIANCE FOR WARRANTY.
REFER TO ACI-117-10 FOR CONSTRUCTION TOLERANCES.

ALTERNATE SEALANTS AT JAMB GAPS CAN BE DESIGNED BY ENGINEER OF RECORD BASED ON MANUFACTURER GUIDE LINES.

GAPS LESS THAN 1/4" MAY BE DESIGNED BY ENGINEER OF RECORD BY THE USE OF BOND BREAKER TAPE OR 15% OF GAP ALLOWED MOVEMENT.

Sealed:8/12/2020

JALAL FAROOQ
LICENSE
No. 81223
STATE OF FLORIDA
PROFESSIONAL ENGINEER

FL #27401

AL-FAROOQ CORPORATION
ENGINEERS & PRODUCT DEVELOPMENT
9360 SUNSET DRIVE, SUITE 220
MIAMI, FLORIDA 33173 (C.A.N. 3538)
TEL. (305) 264-8100 FAX. (305) 262-6978

COMP-ANL\19-18F-MG

SERIES 2000 STICK ALUM. CURTAIN WALL SYS. (L.M.I.)

MR-GLASS DOORS & WINDOWS MANUFACTURING, LLC
8051 N.W. 79th Place
Medley, FL. 33166
Tel. (305) 764-3963 Fax. (305) 470-8285

revisions:

no	date	by	description

date: 03-15-19
scale: 3/8" = 1"
dr. by: TARIQ
chk. by:

drawing no.
19-18F

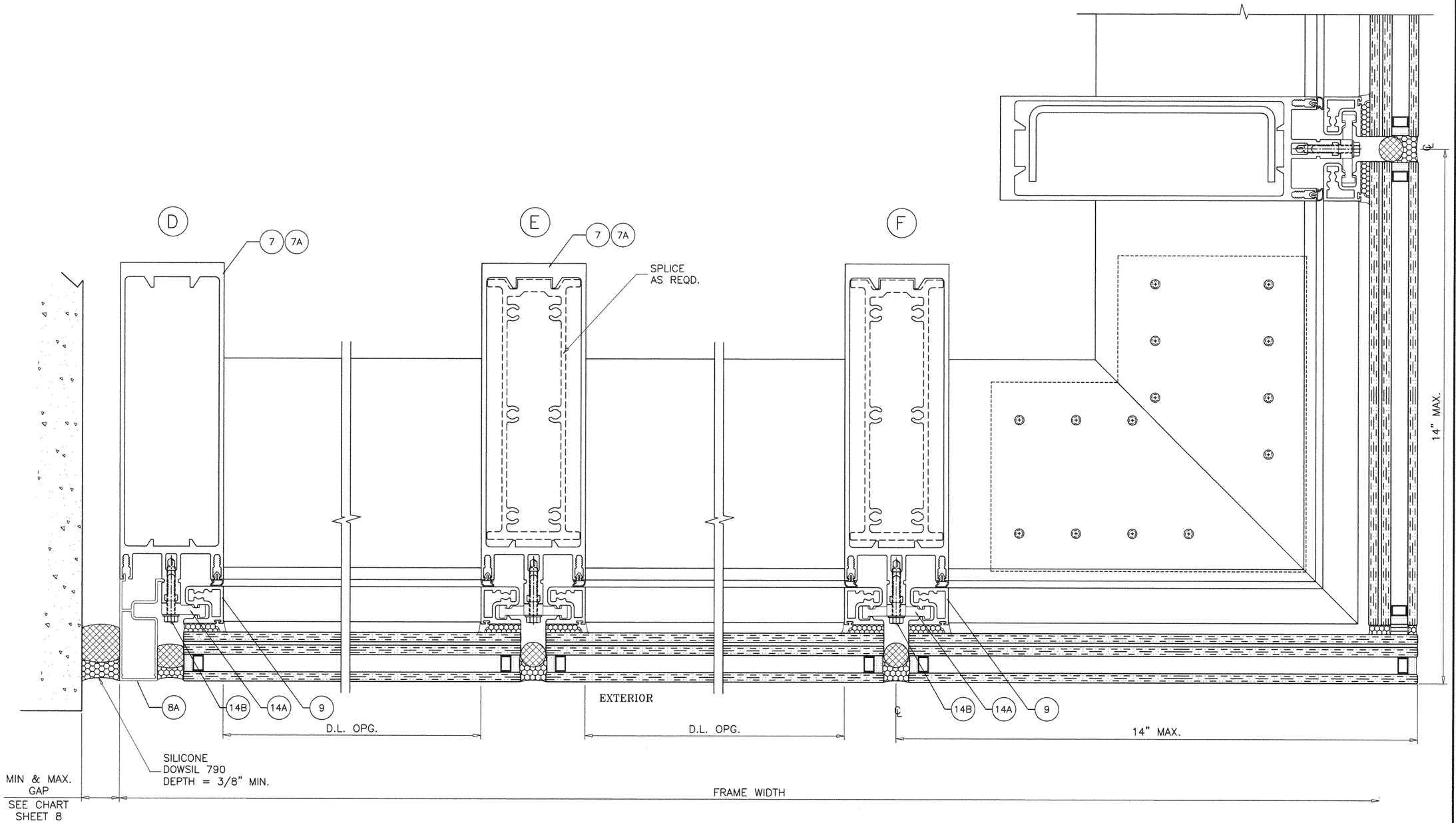

Sealed:8/12/2020

FL #27401

JALAL FAROOQ
LICENSE
No. 81223
STATE OF FLORIDA
PROFESSIONAL ENGINEER

AL-FAROOQ CORPORATION
ENGINEERS & PRODUCT DEVELOPMENT
9360 SUNSET DRIVE, SUITE 220
MIAMI, FLORIDA 33173 (C.A.N. 3538)
TEL. (305) 264-8100 FAX. (305) 262-6978

COMP-ANL\19-18F-MG

SERIES 2000 STICK ALUM. CURTAIN WALL SYS. (L.M.I.)

MR-GLASS DOORS & WINDOWS MANUFACTURING, LLC
8051 N.W. 79th Place
Medley, FL. 33166
Tel. (305) 764-3963 Fax. (305) 470-8285

revisions:			
no	date	by	description

date: 03-15-19
scale: 3/8" = 1"
dr. by: TARIQ
chk. by:

drawing no.
19-18F

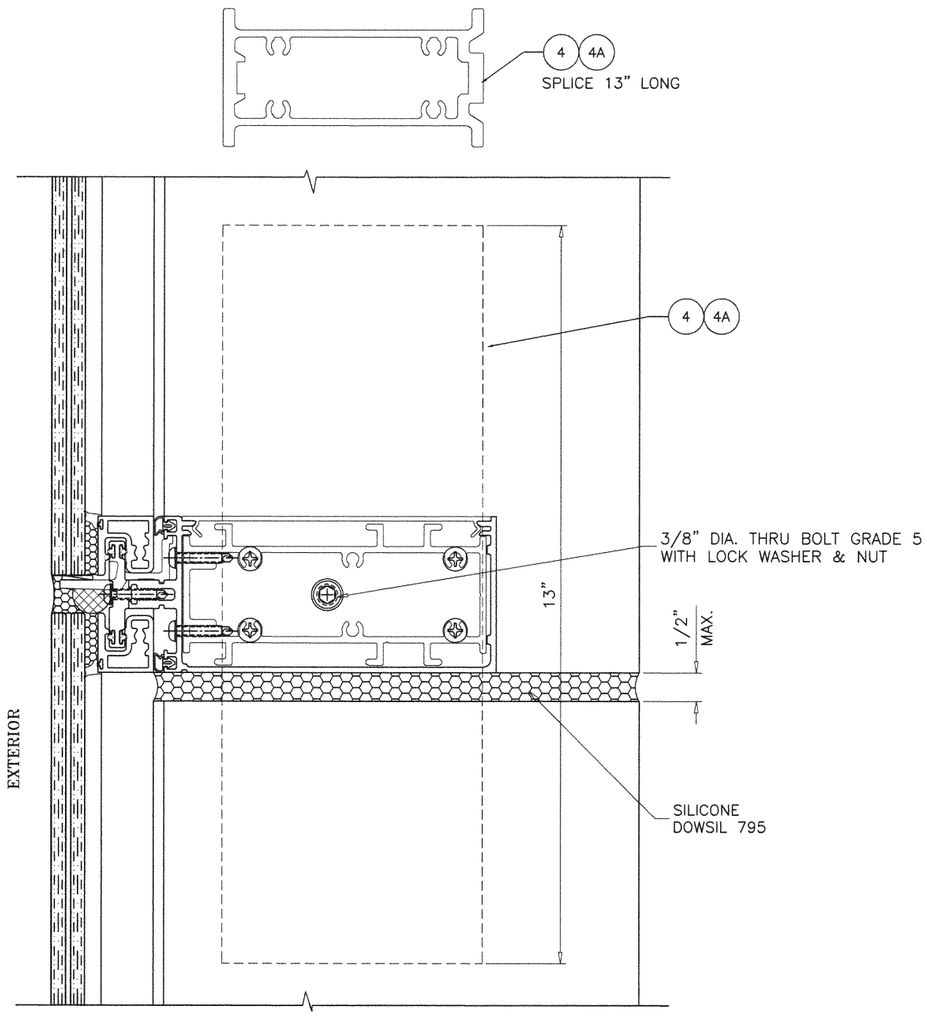

EXPANSION JOINT DETAIL

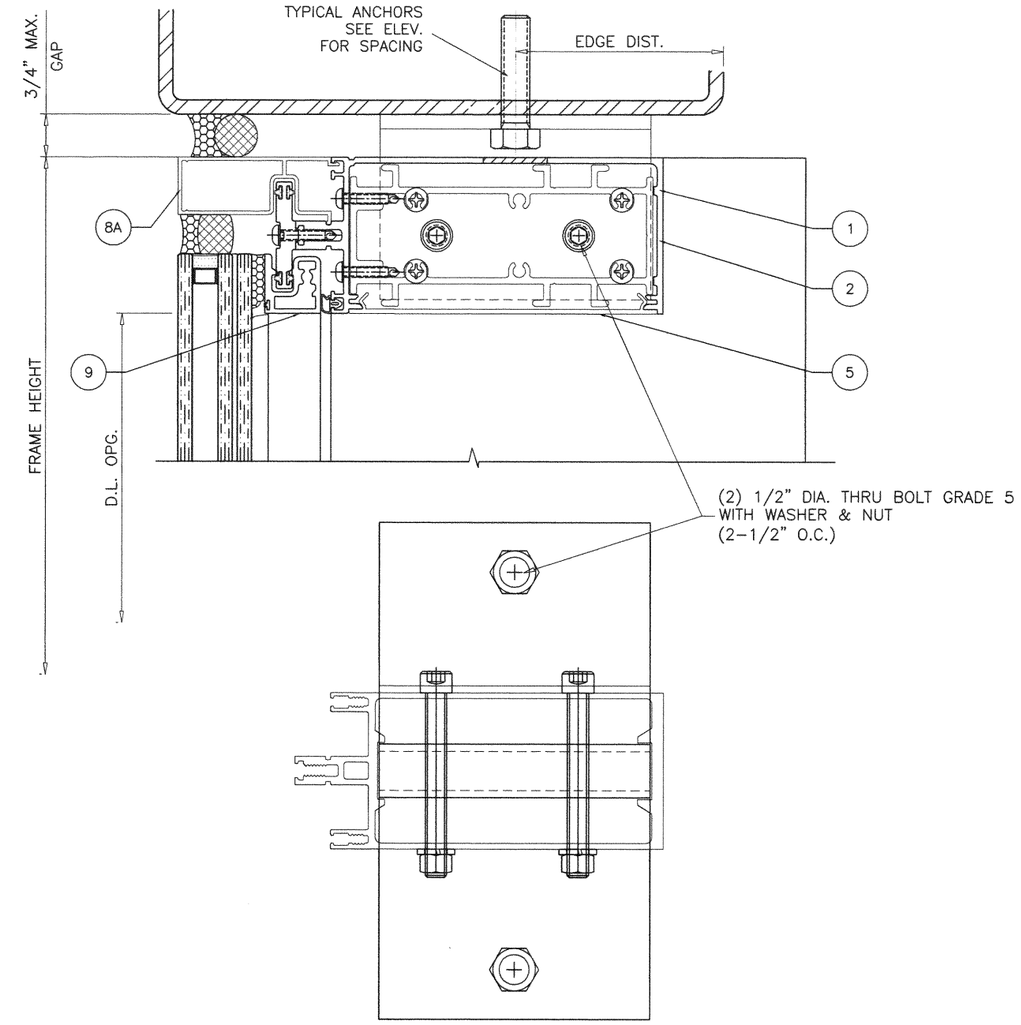

HEAD ANCHOR WITH THRU BOLTS

Sealed:8/12/2020

FL #27401

JALAL FAROOQ
LICENSE
No. 81223
STATE OF FLORIDA
PROFESSIONAL ENGINEER

AL-FAROOQ CORPORATION
ENGINEERS & PRODUCT DEVELOPMENT
9360 SUNSET DRIVE, SUITE 220
MIAMI, FLORIDA 33173 (C.A.N. 3538)
TEL. (305) 264-8100 FAX. (305) 262-6978

COMP-ANL\19-18F-MG

SERIES 2000 STICK ALUM. CURTAIN WALL SYS. (L.M.I.)

MR-GLASS DOORS & WINDOWS MANUFACTURING, LLC
8051 N.W. 79th Place
Medley, FL. 33166
Tel. (305) 764-3963 Fax. (305) 470-8285

revisions:			
no	date	by	description

date: 03-15-19
scale: 3/8" = 1"
dr. by: TARIQ
chk. by:

drawing no.
19-18F

sheet 11.1 of 21

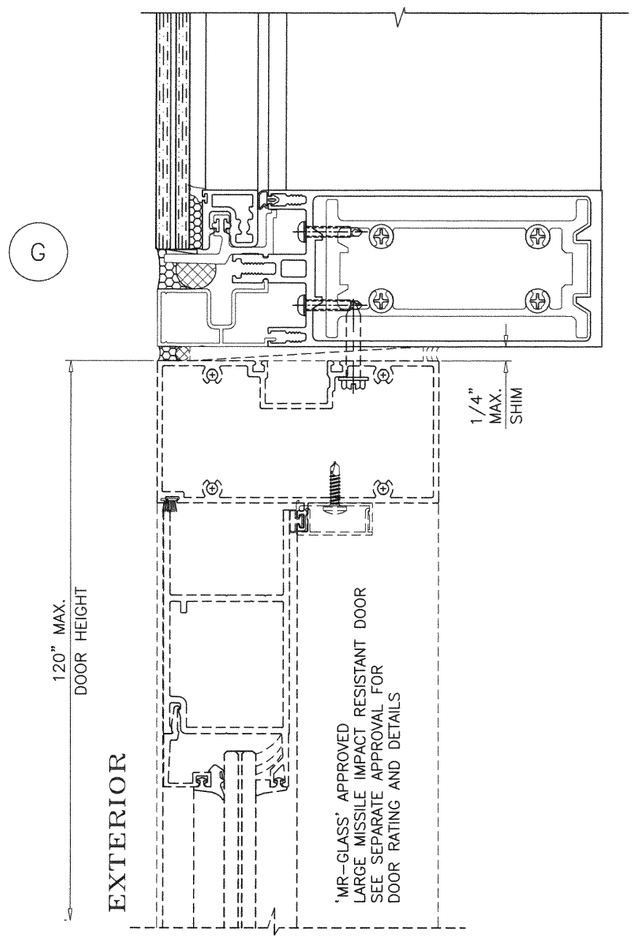

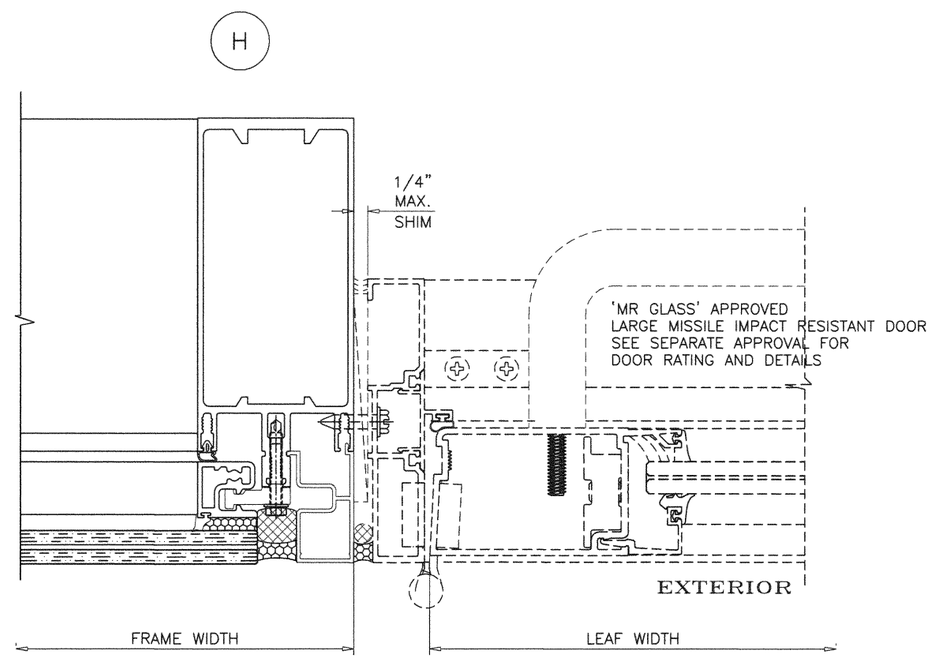

Sealed:8/12/2020

JALAL FAROOQ
LICENSE
No. 81223
STATE OF FLORIDA
PROFESSIONAL ENGINEER

FL #27401

AL-FAROOQ CORPORATION
ENGINEERS & PRODUCT DEVELOPMENT
9360 SUNSET DRIVE, SUITE 220
MIAMI, FLORIDA 33173 (C.A.N. 3538)
TEL. (305) 264-8100 FAX. (305) 262-6978

COMP-ANL\19-18F-MG

SERIES 2000 STICK ALUM. CURTAIN WALL SYS. (L.M.I.)

MR-GLASS DOORS & WINDOWS MANUFACTURING, LLC
8051 N.W. 79th Place
Medley, FL. 33166
Tel. (305) 764-3963 Fax. (305) 470-8285

revisions:

no	date	by	description

date: 03-15-19
scale: 3/8" = 1"
dr. by: TARIQ
chk. by:

drawing no. 19-18F

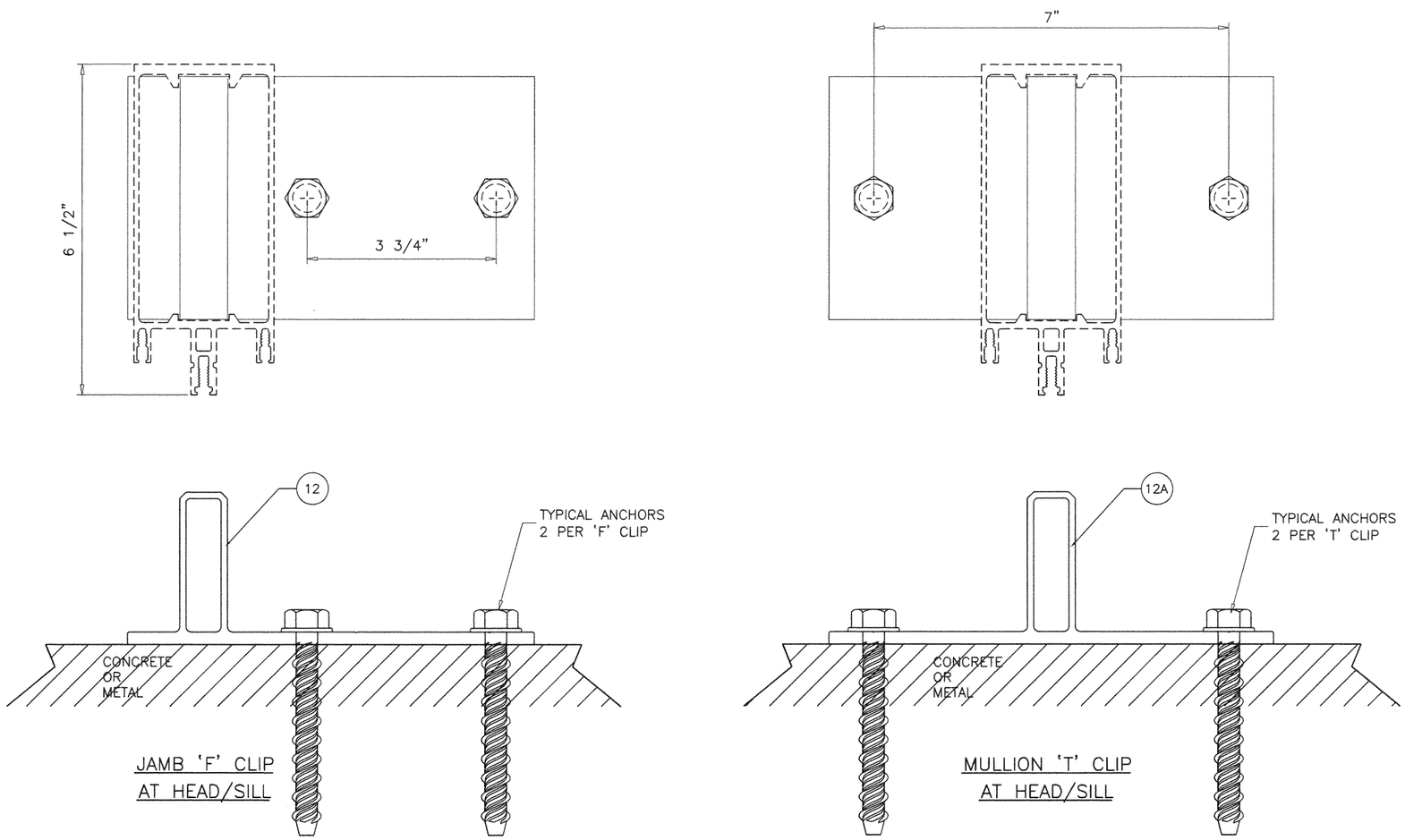

ANCHORS TYPE 'A'

Sealed:8/12/2020

FL #27401

JALAL FAROOQ
LICENSE
No. 81223
STATE OF FLORIDA
PROFESSIONAL ENGINEER

AL-FAROOQ CORPORATION
ENGINEERS & PRODUCT DEVELOPMENT
9360 SUNSET DRIVE, SUITE 220
MIAMI, FLORIDA 33173 (C.A.N. 3538)
TEL. (305) 264-8100 FAX. (305) 262-6978

COMP-ANL\19-18F-MG

SERIES 2000 STICK ALUM. CURTAIN WALL SYS. (L.M.I.)

MR-GLASS DOORS & WINDOWS MANUFACTURING, LLC
8051 N.W. 79th Place
Medley, FL. 33166
Tel. (305) 764-3963 Fax. (305) 470-8285

revisions:			
no	date	by	description

date: 03-15-19
scale: 3/8" = 1"
dr. by: TARIQ
chk. by:

drawing no.
19-18F

sheet 13 of 21

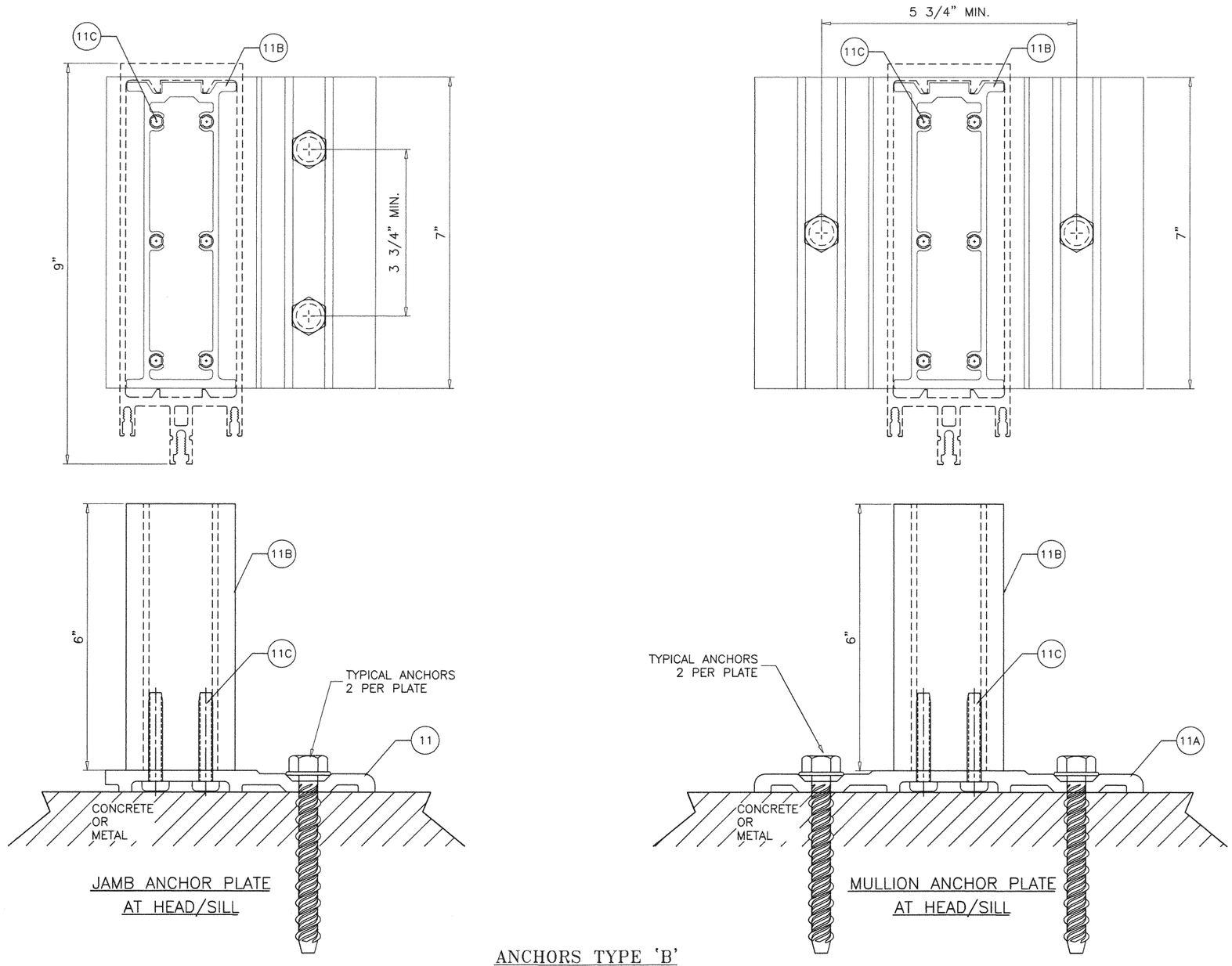

ANCHORS TYPE 'B'

Sealed:8/12/2020

FL #27401

JALAL FAROOQ
LICENSE
No. 81223
STATE OF FLORIDA
PROFESSIONAL ENGINEER

AL-FAROOQ CORPORATION
ENGINEERS & PRODUCT DEVELOPMENT
9360 SUNSET DRIVE, SUITE 220
MIAMI, FLORIDA 33173 (C.A.N. 3538)
TEL. (305) 264-8100 FAX. (305) 262-6978

COMP-ANL\19-18F-MG

SERIES 2000 STICK ALUM. CURTAIN WALL SYS. (L.M.I.)

MR-GLASS DOORS & WINDOWS MANUFACTURING, LLC
8051 N.W. 79th Place
Medley, FL. 33166
Tel. (305) 764-3963 Fax. (305) 470-8285

revisions:			
no	date	by	description

date: 03-15-19
scale: 3/8" = 1"
dr. by: TARIQ
chk. by:

drawing no. 19-18F

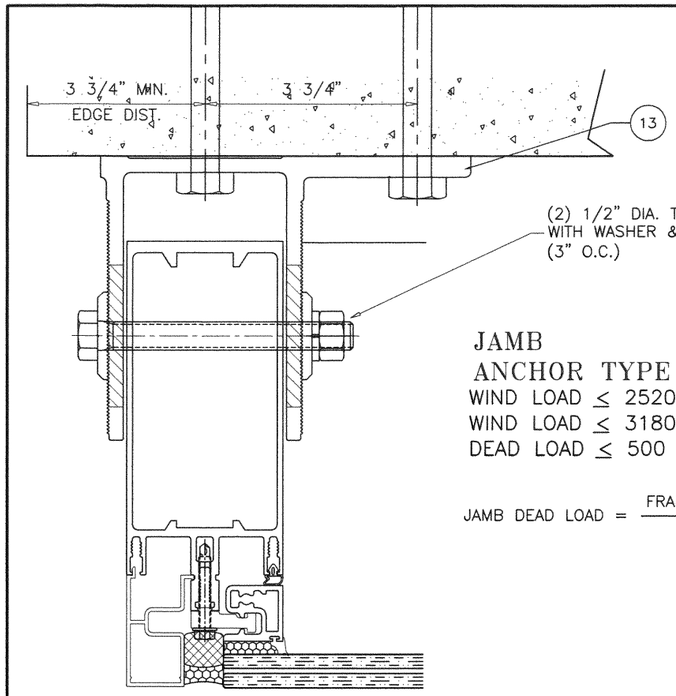

JAMB
ANCHOR TYPE '1'
WIND LOAD ≤ 2520 LBS (4000 PSI CONC.)
WIND LOAD ≤ 3180 LBS (6000 PSI CONC.)
DEAD LOAD ≤ 500 LBS

$$\text{JAMB DEAD LOAD} = \frac{\text{FRAME WIDTH (FT.)} \times \text{FRAME HT. (FT.)}}{2} \times 13 \text{ PSF}$$

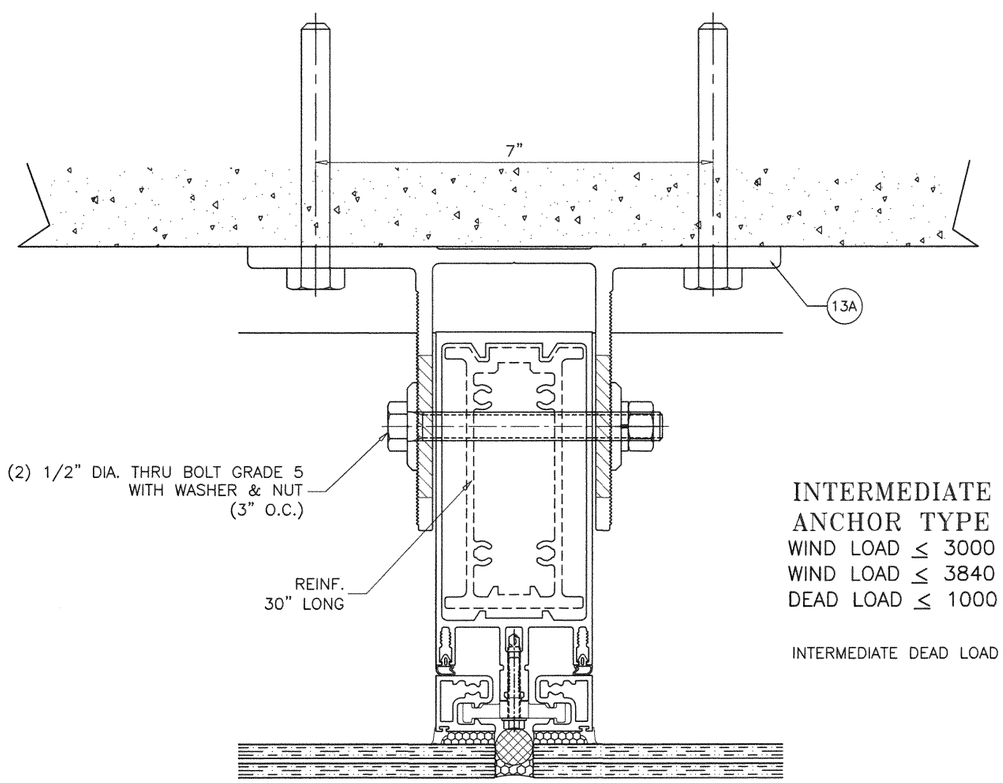

INTERMEDIATE
ANCHOR TYPE '1'
WIND LOAD ≤ 3000 LBS (4000 PSI CONC.)
WIND LOAD ≤ 3840 LBS (6000 PSI CONC.)
DEAD LOAD ≤ 1000 LBS

INTERMEDIATE DEAD LOAD = FRAME WIDTH (FT.) X FRAME HT. (FT.) X 13 PSF

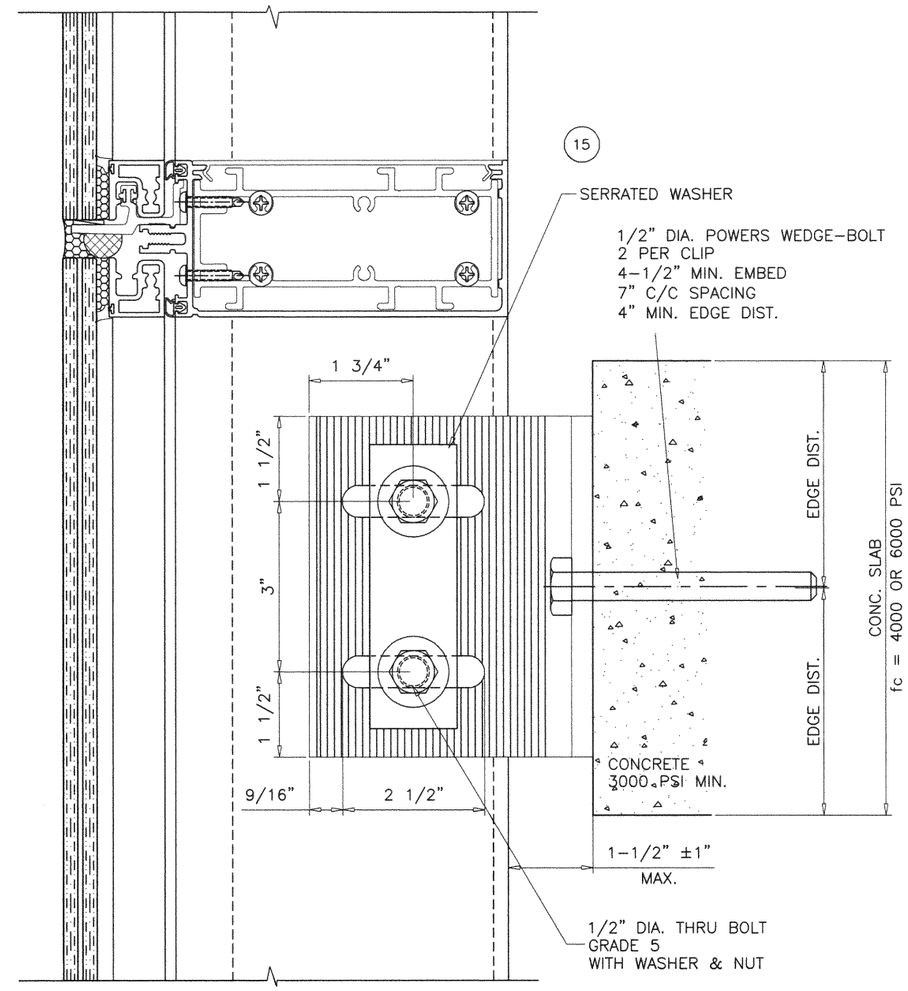

INTERMEDIATE ANCHORS

Sealed:8/12/2020

JALAL FAROOQ
LICENSE
No. 81223
STATE OF FLORIDA
PROFESSIONAL ENGINEER

FL #27401

DEAD LOAD ANCHOR

AL-FAROOQ CORPORATION
ENGINEERS & PRODUCT DEVELOPMENT
9360 SUNSET DRIVE, SUITE 220
MIAMI, FLORIDA 33173 (C.A.N. 3538)
TEL. (305) 264-8100 FAX. (305) 262-6978
COMP-ANL\19-18F-MG

SERIES 2000 STICK ALUM. CURTAIN WALL SYS. (L.M.I.)

MR-GLASS DOORS & WINDOWS MANUFACTURING, LLC
8051 N.W. 79th Place
Medley, FL. 33166
Tel. (305) 764-3963 Fax. (305) 470-8285

revisions:			
no	date	by	description

date: 03-15-19
scale: 3/8" = 1"
dr. by: TARIQ
chk. by:

drawing no.
19-18F

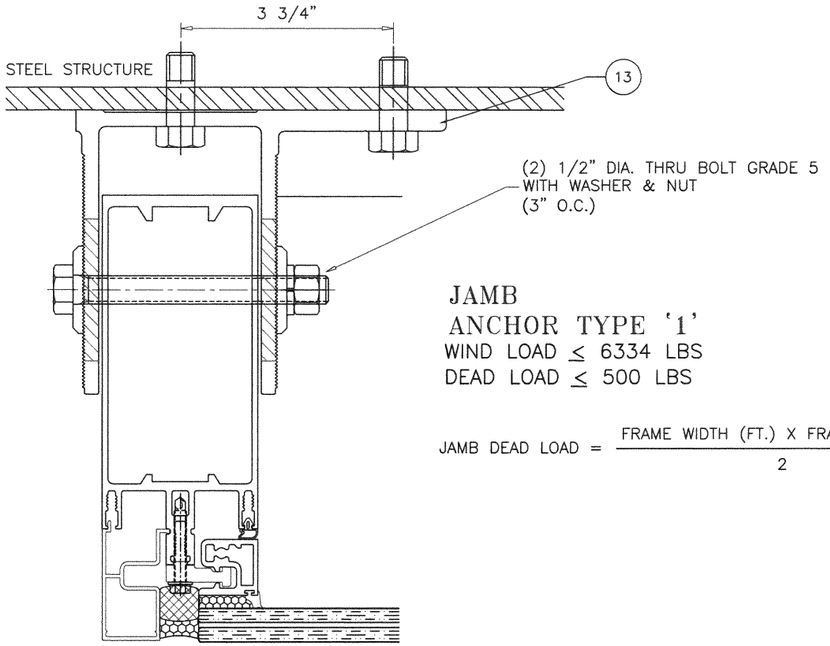

JAMB
ANCHOR TYPE '1'
WIND LOAD ≤ 6334 LBS
DEAD LOAD ≤ 500 LBS

$$\text{JAMB DEAD LOAD} = \frac{\text{FRAME WIDTH (FT.)} \times \text{FRAME HT. (FT.)}}{2} \times 13 \text{ PSF}$$

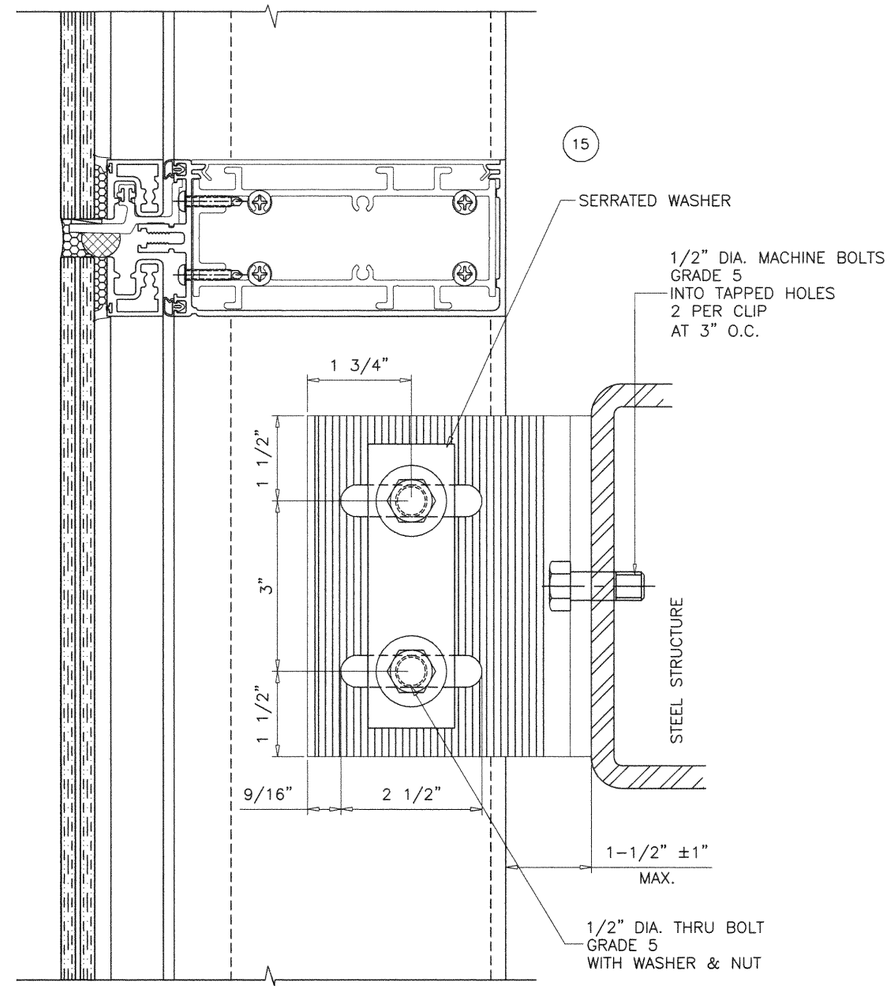

INTERMEDIATE ANCHORS

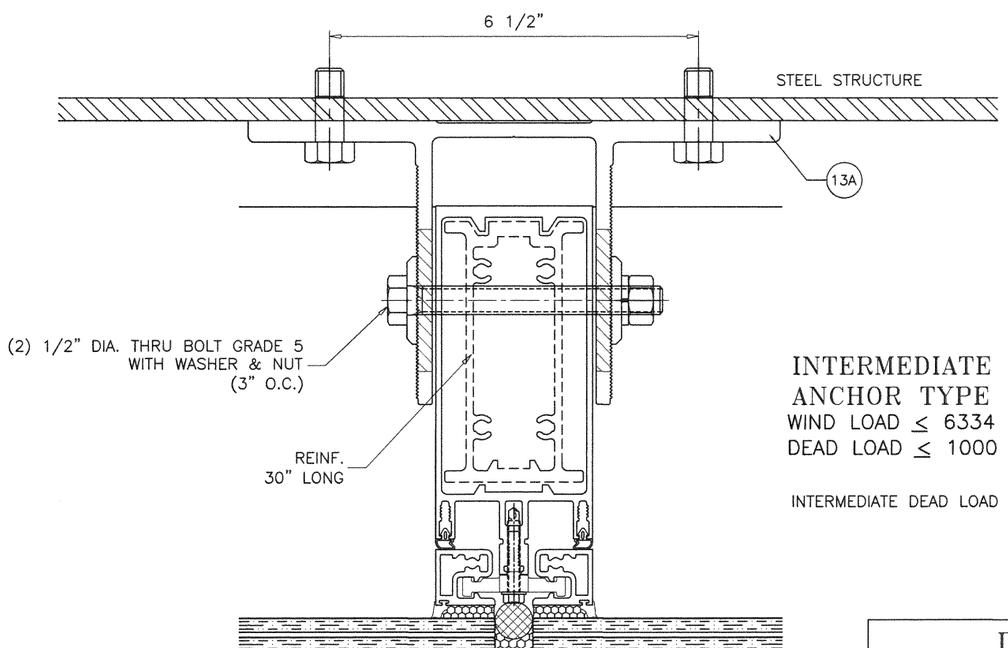

INTERMEDIATE
ANCHOR TYPE '1'
WIND LOAD ≤ 6334 LBS
DEAD LOAD ≤ 1000 LBS

INTERMEDIATE DEAD LOAD = FRAME WIDTH (FT.) X FRAME HT. (FT.) X 13 PSF

DEAD LOAD ANCHOR
INTO 1/4" THK. MIN. COMMERCIAL STEEL

Sealed:8/12/2020

JALAL FAROOQ
LICENSE
No. 81223
STATE OF FLORIDA
PROFESSIONAL ENGINEER

FL #27401

AL-FAROOQ CORPORATION
ENGINEERS & PRODUCT DEVELOPMENT
9360 SUNSET DRIVE, SUITE 220
MIAMI, FLORIDA 33173 (C.A.N. 3538)
TEL. (305) 264-8100 FAX. (305) 262-6978

COMP-ANL\19-18F-MG

SERIES 2000 STICK ALUM. CURTAIN WALL SYS. (L.M.I.)

MR-GLASS DOORS & WINDOWS MANUFACTURING, LLC
8051 N.W. 79th Place
Medley, FL. 33166
Tel. (305) 764-3963 Fax. (305) 470-8285

revisions:			
no	date	by	description

date: 03-15-19
scale: 3/8" = 1"
dr. by: TARIQ
chk. by:

drawing no.
19-18F

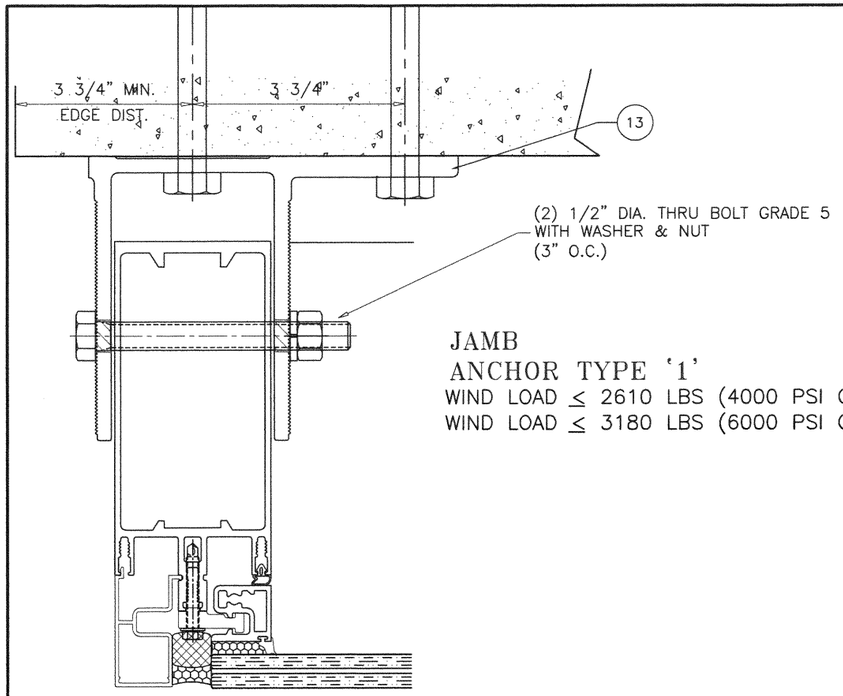

JAMB
ANCHOR TYPE '1'
WIND LOAD ≤ 2610 LBS (4000 PSI CONC.)
WIND LOAD ≤ 3180 LBS (6000 PSI CONC.)

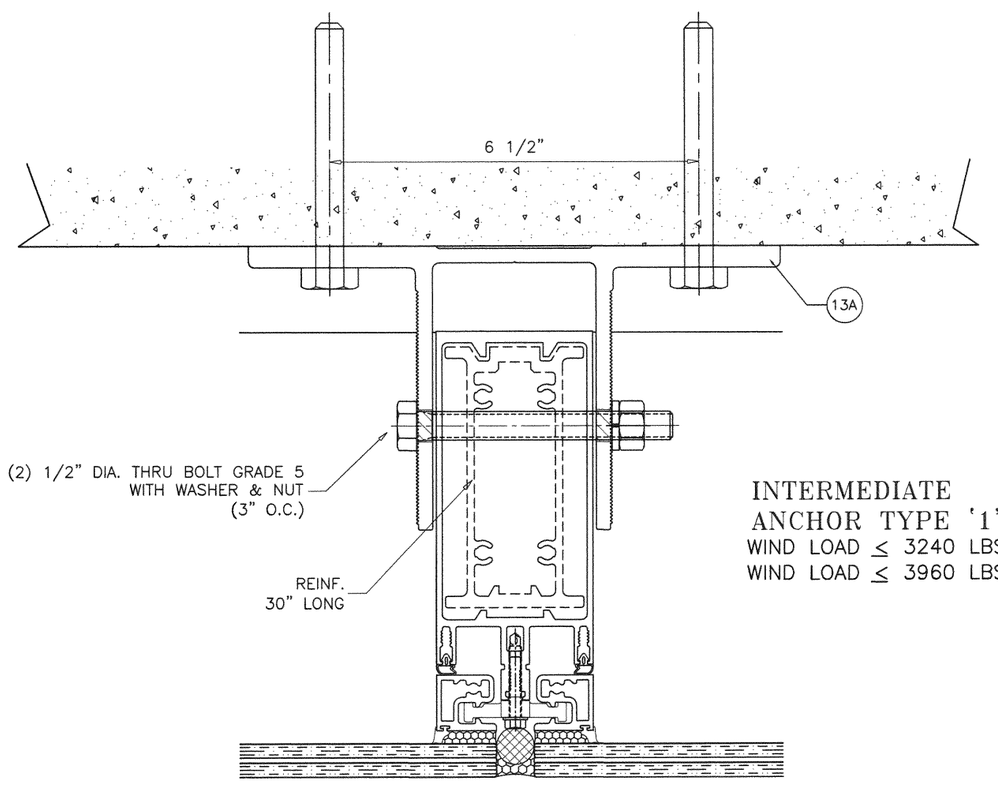

INTERMEDIATE
ANCHOR TYPE '1'
WIND LOAD ≤ 3240 LBS (4000 PSI CONC.)
WIND LOAD ≤ 3960 LBS (6000 PSI CONC.)

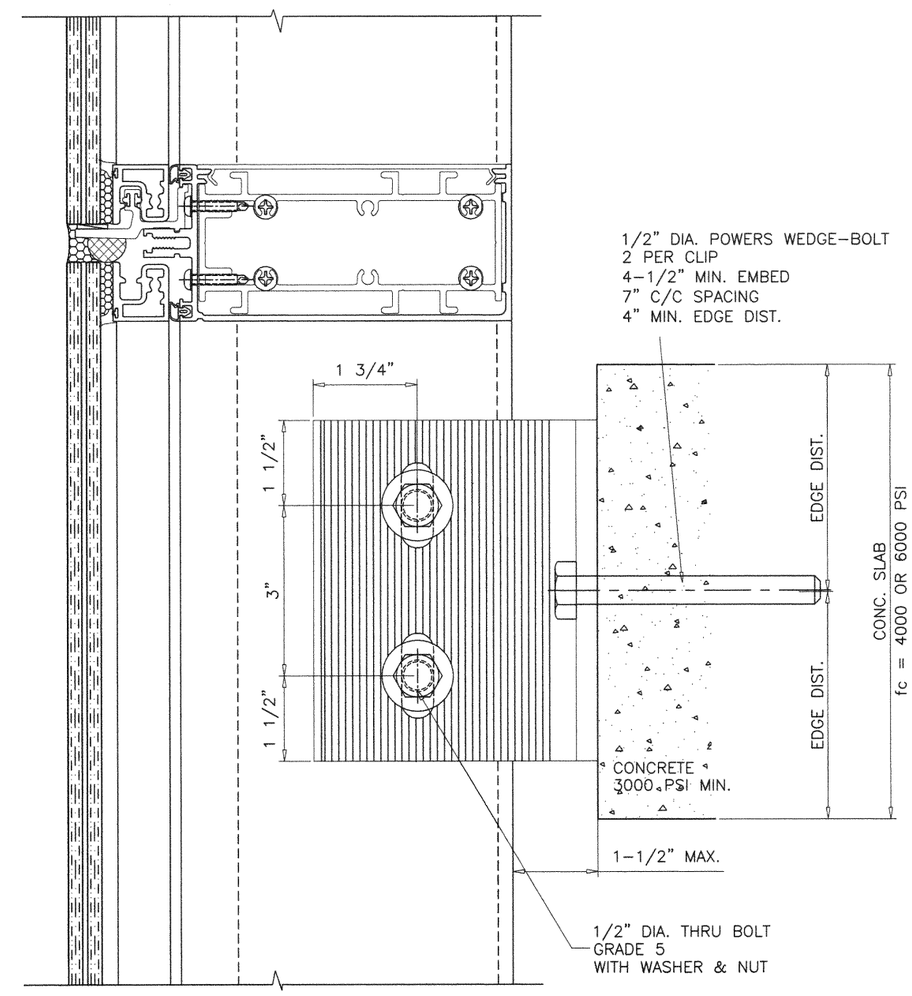

INTERMEDIATE ANCHORS

WIND LOAD ANCHOR

Sealed:8/12/2020

FL #27401

JALAL FAROOQ
LICENSE
No. 81223
STATE OF FLORIDA
PROFESSIONAL ENGINEER

AL-FAROOQ CORPORATION
ENGINEERS & PRODUCT DEVELOPMENT
9360 SUNSET DRIVE, SUITE 220
MIAMI, FLORIDA 33173
(C.A.N. 3538)
TEL. (305) 264-8100 FAX. (305) 262-6978

COMP-ANL\19-18F-MG

SERIES 2000 STICK ALUM. CURTAIN WALL SYS. (L.M.I.)

MR-GLASS DOORS & WINDOWS MANUFACTURING, LLC
8051 N.W. 79th Place
Medley, FL. 33166
Tel. (305) 764-3963 Fax. (305) 470-8285

revisions:			
no	date	by	description

date: 03-15-19
scale: 3/8" = 1"
dr. by: TARIQ
chk. by:

drawing no.
19-18F

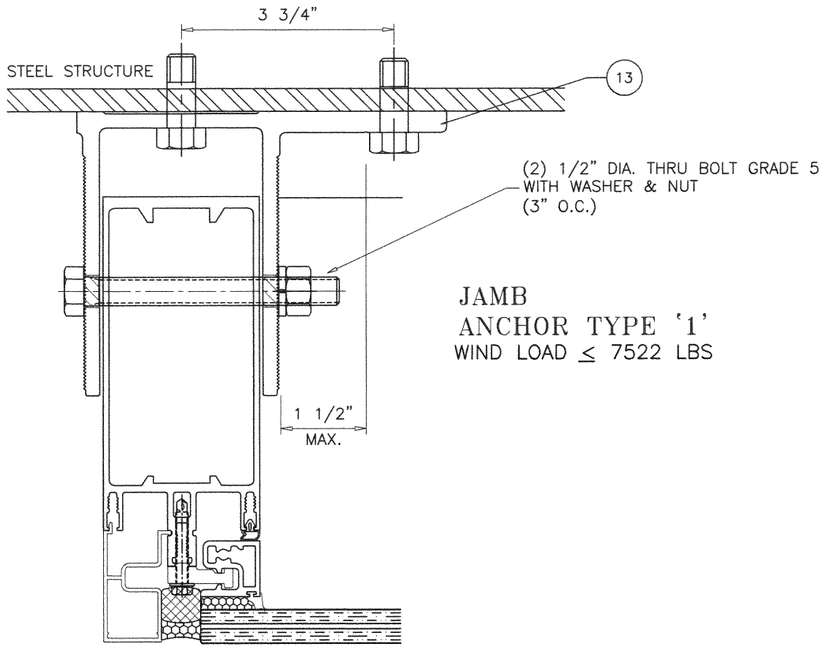

JAMB
ANCHOR TYPE '1'
WIND LOAD ≤ 7522 LBS

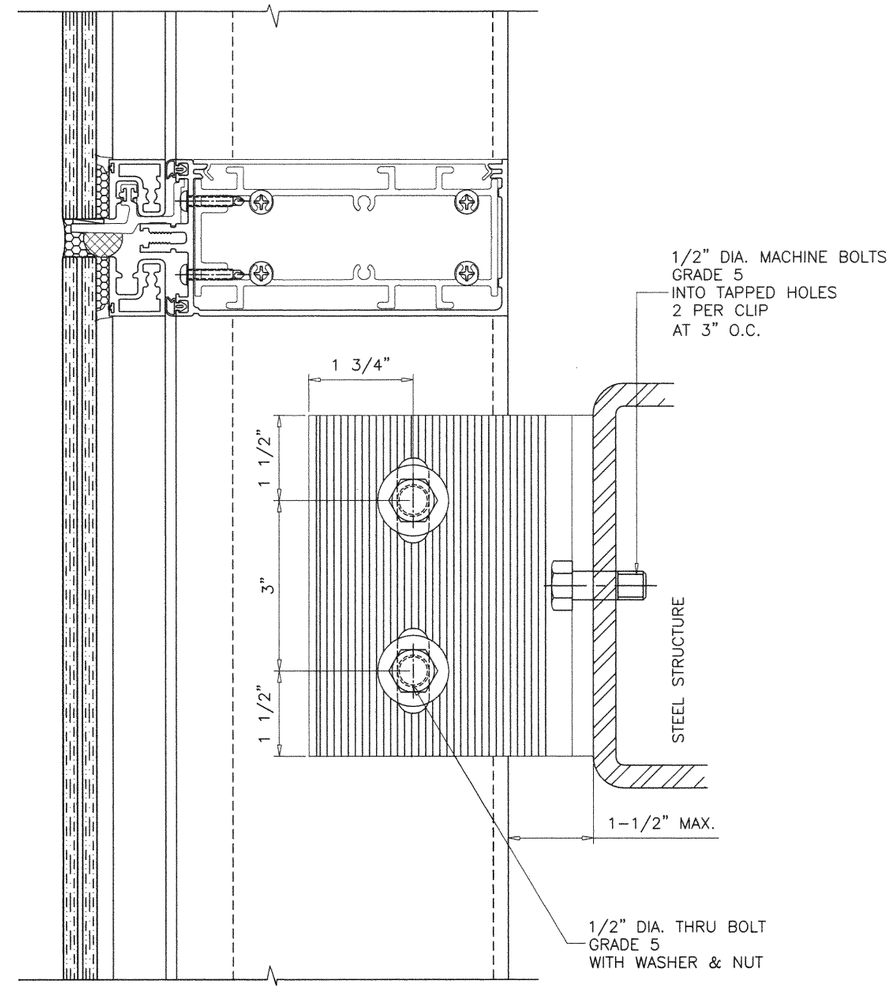

INTERMEDIATE ANCHORS

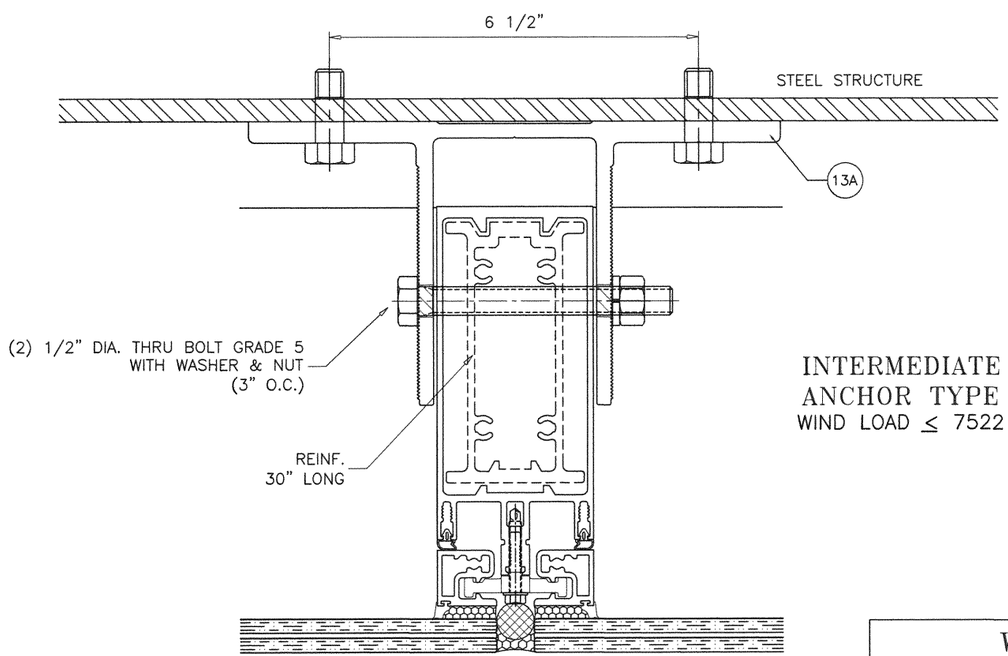

INTERMEDIATE
ANCHOR TYPE '1'
WIND LOAD ≤ 7522 LBS

WIND LOAD ANCHOR
INTO 1/4" THK. MIN. COMMERCIAL STEEL

Sealed:8/12/2020

FL #27401

JALAL FAROOQ
LICENSE
No. 81223
STATE OF FLORIDA
PROFESSIONAL ENGINEER

AL-FAROOQ CORPORATION
ENGINEERS & PRODUCT DEVELOPMENT
9360 SUNSET DRIVE, SUITE 220
MIAMI, FLORIDA 33173 (C.A.N. 3538)
TEL. (305) 264-8100 FAX. (305) 262-6978

COMP-ANL\19-18F-MG

SERIES 2000 STICK ALUM. CURTAIN WALL SYS. (L.M.I.)

MR-GLASS DOORS & WINDOWS MANUFACTURING, LLC
8051 N.W. 79th Place
Medley, FL. 33166
Tel. (305) 764-3963 Fax. (305) 470-8285

revisions:

no	date	by	description

date: 03-15-19
scale: 3/8" = 1"
dr. by: TARIQ
chk. by:

drawing no.
19-18F

ITEM NO.	PART NUMBER	QUANTITY	DESCRIPTION	MATERIAL	MANF./SUPPLIER/REMARKS
1	E-2007	AS REQD.	FRAME HEAD/SILL/HORIZONTAL	6063-T6	–
2	E-2010	AS REQD.	SHEAR BLOCK, 7/8" LONG, SPLICE	6063-T6	–
2A	#12 1-1/4"	4/ BLOCK	SHEAR BLOCK FASTENERS	ST. STEEL	PH SELF DRILLING
2B	#10 X 3/4"	2/ BLOCK	SHEAR BLOCK FASTENERS	ST. STEEL	PH SELF DRILLING
3	E-2022	AS REQD.	JAMB/MULLION REINFORCEMENT (LENGTH = 30")	6063-T6	–
3A	E-2021	AS REQD.	JAMB/REINFORCEMENT (LENGTH = 30")	6063-T6	–
3C	–	AS REQD.	REINF. CHANNEL (LENGTH = 30")	STEEL	A36, Fu MIN. 58 KSI
3.1	E-2022	AS REQD.	HORIZONTAL REINFORCEMENT (FULL LENGTH)	6063-T6	–
4	E-2022	AS REQD.	SPLICE (LENGTH = 13")	6063-T6	–
4A	E-2021	AS REQD.	SPLICE (LENGTH = 13")	6063-T6	–
5	E-2046	AS REQD.	FRAME COVER	6063-T5	–
6	A20-02	2/ LITE	SITTING SHELF, 6" LONG (LAM. GLASS)	6063-T6	–
6A	A20-03	2/ LITE	SITTING SHELF, 6" LONG (INSUL. LAM. GLASS)	6063-T6	–
6B	#12 X 3/4"	2/ SHELF	SITTING SHELF FASTENERS	ST. STEEL	PH SMS
7	E-2002	AS REQD.	6-1/2" FRAME JAMB/MULLION/HORIZONTAL	6063-T6	–
7A	E-2001	AS REQD.	9" FRAME JAMB/MULLION	6063-T6	–
8	E-2047	AS REQD.	POCKET FILLER (LAM. GLASS)	6063-T5	–
8A	E-2048	AS REQD.	POCKET FILLER (INSUL. LAM. GLASS)	6063-T5	–
9	E-2031	AS REQD.	SUB FRAME	6063-T6	–
10	E-2037	AS REQD.	SUB FRAME CORNER KEY	6063-T6	–
10A	#12 X 2-1/2"	1/ CORNER	SUB FRAME ASSEMBLY FASTENERS	ST. STEEL	FH SELF DRILLING
11	E-2013	AS REQD.	ANCHOR PLATE (JAMB)	6063-T6	–
11A	E-2013	AS REQD.	ANCHOR PLATE (MULLION)	6063-T6	–
11B	E-2021	AS REQD.	ANCHOR INSERT, 6" LONG	6063-T6	–
11C	5/16" X 2"	6/ PLATE	PLATE FASTENERS	ST. STEEL	PH TAPPING SCREW
12	E-2015	AS REQD.	'F' ANCHOR CLIP (JAMB)	6063-T6	–
12A	E-2014	AS REQD.	'T' ANCHOR CLIP (MULLION)	6063-T6	–
13	E-2016	AS REQD.	INTERMEDIATE ANCHOR CLIP (JAMB)	6063-T6	–
13A	E-2016	AS REQD.	INTERMEDIATE ANCHOR CLIP (MULLION)	6063-T6	–
14	E-2033	AS REQD.	RETAINER CLIP, 2" LONG	6063-T5	–
14A	E-2015	AS REQD.	RETAINER CLIP, 2" LONG, AT 18" O.C. MAX.	6063-T5	–
14B	#12 X 3"	2/ CLIP	RETAINER CLIP FASTENERS	ST. STEEL	HH SELF DRILLING
15	E-2017	AS REQD.	SERRATED WASHER	6063-T5	–
16	G-2002	AS REQD.	SUB FRAME GASKET	EPDM	DUROMETER 80±5 SHORE A
17	G-2001	AS REQD.	INTERIOR GLAZING GASKET	SANTOPRENE	DUROMETER 70±5 SHORE A
18	G-2003	AS REQD.	PRESSURE PLATE GASKET	EPDM	DUROMETER 80±5 SHORE A
19	G-2006	AS REQD.	BUMPER (AT SITTING SHELF)	EPDM	DUROMETER 80±5 SHORE A
20	–	2/ LITE	SETTING BLOCKS (9/16" X 1/8" X 4" LONG) AT 1/4 POINTS	SILICONE	DUROMETER 80±5 SHORE A
20A	–	2/ LITE	SETTING BLOCKS (9/16" X 1/8" X 4" LONG) AT 1/4 POINTS	SILICONE	DUROMETER 80±5 SHORE A
–	–	–	–	–	–

SEALANTS:

ALL FRAME CORNERS, JOINTS, MULLION SEAMS AND PERIMETER OF GLAZING BEAD TO FRAME SEALED WITH SILICONE SEALANT.

Sealed:8/12/2020

JALAL FAROOQ
LICENSE
No. 81223
STATE OF FLORIDA
PROFESSIONAL ENGINEER

FL #27401

AL-FAROOQ CORPORATION
ENGINEERS & PRODUCT DEVELOPMENT
9360 SUNSET DRIVE, SUITE 220
MIAMI, FLORIDA 33173 (C.A.N. 3538)
TEL. (305) 264-8100 FAX. (305) 262-6978

COMP-ANL\19-18F-MG

SERIES 2000 STICK ALUM. CURTAIN WALL SYS. (L.M.I.)

MR-GLASS DOORS & WINDOWS MANUFACTURING, LLC
8051 N.W. 79th Place
Medley, FL. 33166
Tel. (305) 764-3963 Fax. (305) 470-8285

revisions:

no	date	by	description

date: 03-15-19
scale: 3/8" = 1"
dr. by: TARIQ
chk. by:

drawing no. 19-18F

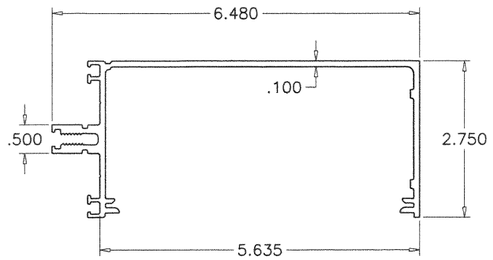

1 FRAME HEAD/SILL/HORIZONTAL

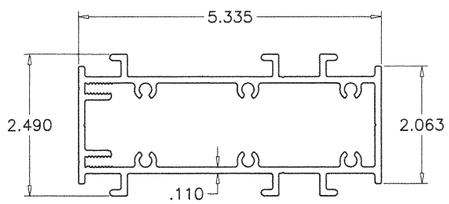

2 SHEAR BLOCK

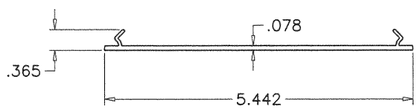

5 FRAME COVER

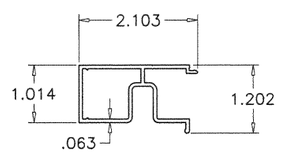

8 POCKET FILLER (LAM. GLASS)

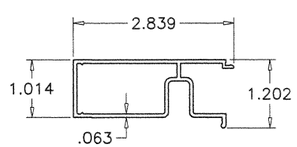

8A POCKET FILLER (INSUL. LAM. GLASS)

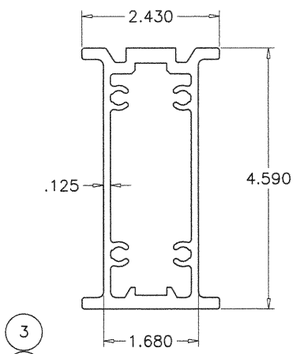

3 3.1 4 JAMB/MULL/HORIZ. REINF. SPLICE

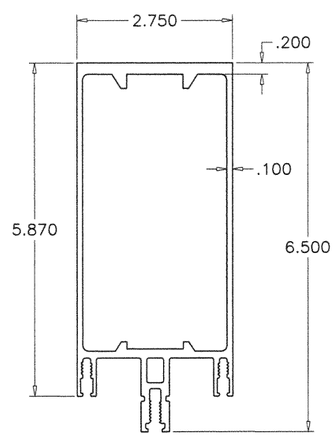

7 FRAME JAMB/MULLION/HORIZ.

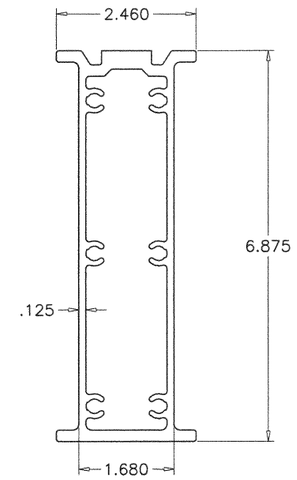

3A 4A JAMB/MULL REINF. SPLICE

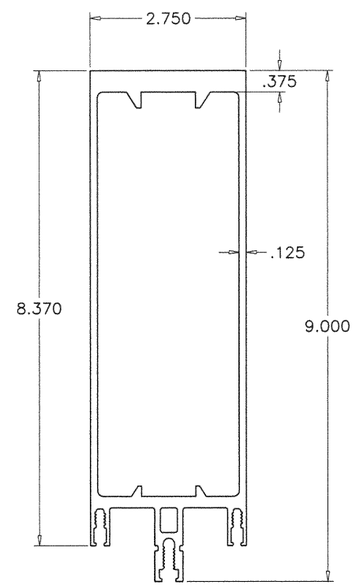

7A FRAME JAMB/MULLION

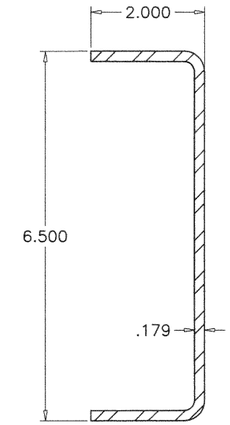

3C REINF. CHANNEL

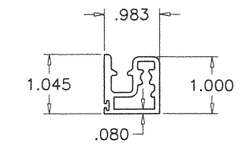

9 SUB FRAME

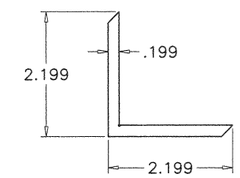

10 SUB FRAME CORNER KEY

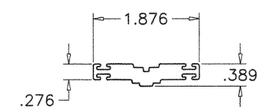

14 RETAINER CLIP

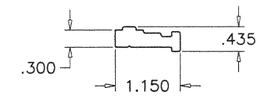

14A RETAINER CLIP

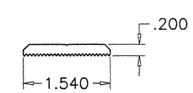

15 SERRATED WASHER

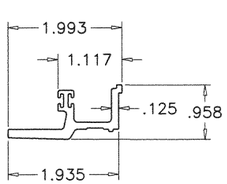

6 SITTING SHELF (LAM. GLASS)

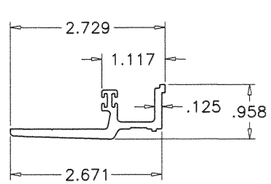

6A SITTING SHELF (INSUL. LAM. GLASS)

Sealed:8/12/2020

FL #27401

JALAL FAROOQ LICENSE No. 81223 STATE OF FLORIDA PROFESSIONAL ENGINEER

AL-FAROOQ CORPORATION
ENGINEERS & PRODUCT DEVELOPMENT
9360 SUNSET DRIVE, SUITE 220
MIAMI, FLORIDA 33173 (C.A.N. 3538)
TEL. (305) 264-8100 FAX. (305) 262-6978

COMP-ANL\19-18F-MG

SERIES 2000 STICK ALUM. CURTAIN WALL SYS. (L.M.I.)

MR-GLASS DOORS & WINDOWS MANUFACTURING, LLC
8051 N.W. 79th Place
Medley, FL. 33166
Tel. (305) 764-3963 Fax. (305) 470-8285

revisions:			
no	date	by	description

date: 03-15-19
scale: 3/8" = 1"
dr. by: TARIQ
chk. by:

drawing no. 19-18F

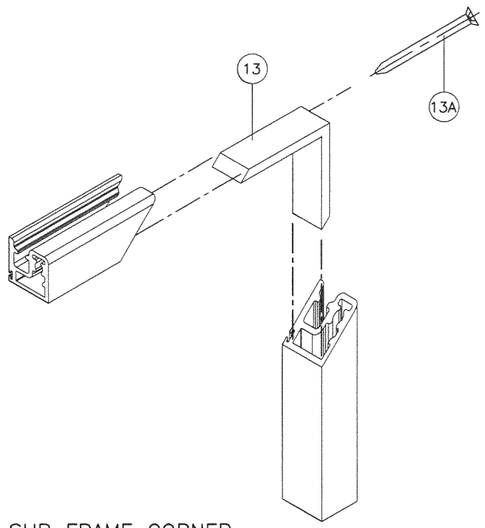

SUB FRAME CORNER

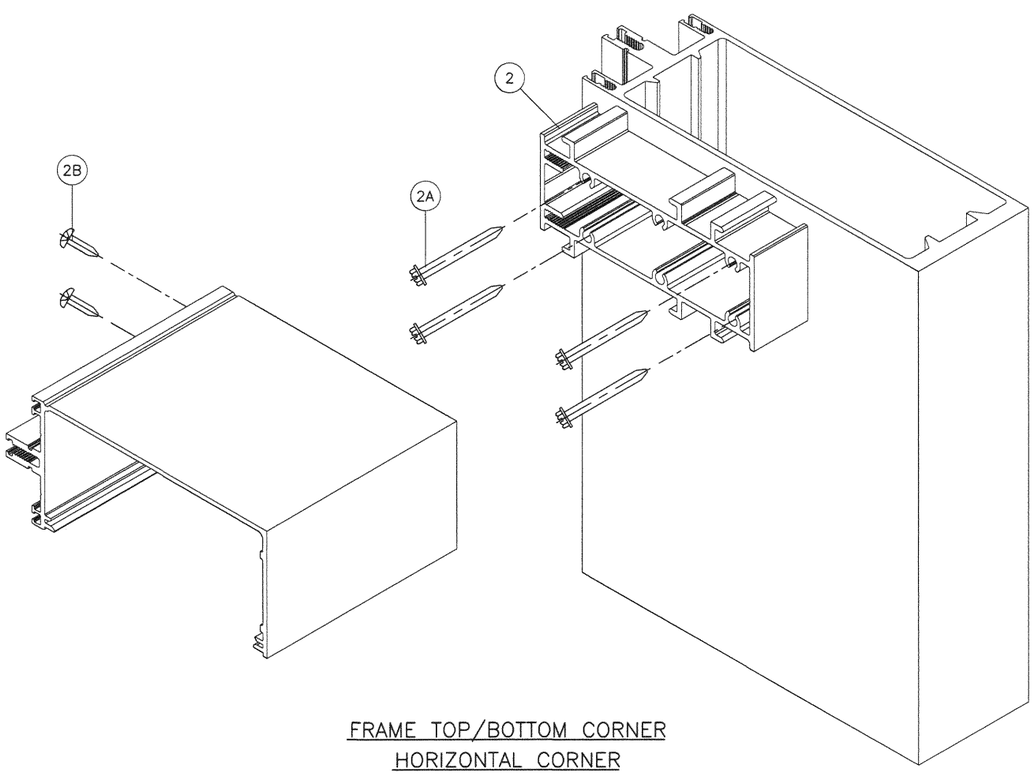

FRAME TOP/BOTTOM CORNER
HORIZONTAL CORNER

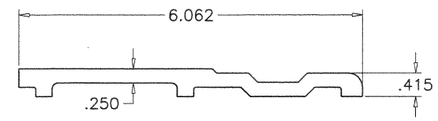

11 ANCHOR PLATE (JAMB)

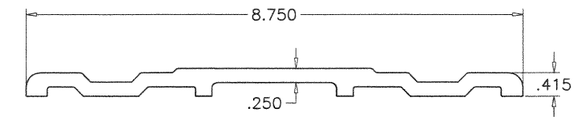

11A ANCHOR PLATE (MULLION)

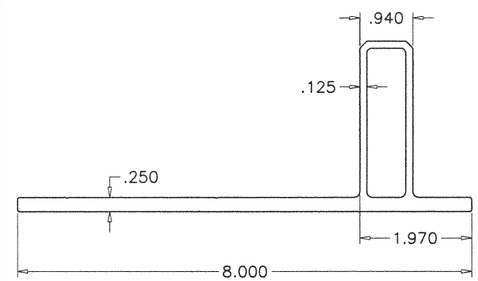

12 'F' ANCHOR CLIP (JAMB)

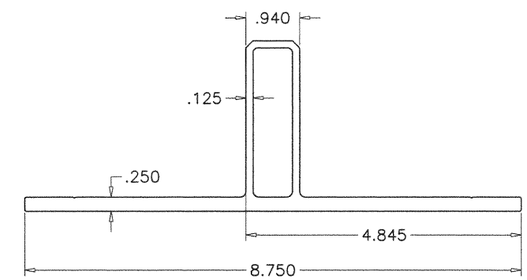

12A 'T' ANCHOR CLIP (MULLION)

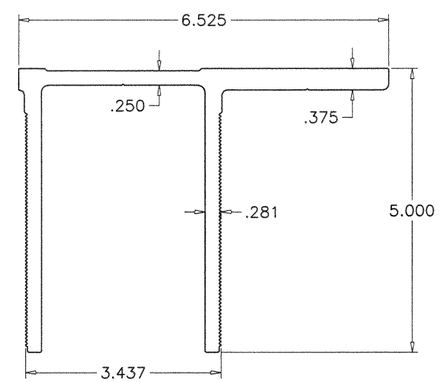

13 INTERMEDIATE ANCHOR CLIP (JAMB)

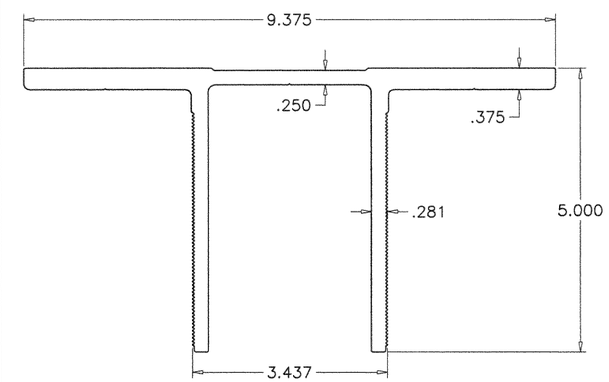

13A INTERMEDIATE ANCHOR CLIP (MULLION)

Sealed:8/12/2020

JALAL FAROOQ
LICENSE
No. 81223
STATE OF FLORIDA
PROFESSIONAL ENGINEER

FL #27401

AL-FAROOQ CORPORATION
ENGINEERS & PRODUCT DEVELOPMENT
9360 SUNSET DRIVE, SUITE 220
MIAMI, FLORIDA 33173 (C.A.N. 3538)
TEL. (305) 264-8100 FAX. (305) 262-6978

COMP-ANL\19-18F-MG

SERIES 2000 STICK ALUM. CURTAIN WALL SYS. (L.M.I.)

MR-GLASS DOORS & WINDOWS MANUFACTURING, LLC
8051 N.W. 79th Place
Medley, FL. 33166
Tel. (305) 764-3963 Fax. (305) 470-8285

revisions:			
no	date	by	description

date: 03-15-19
scale: 3/8" = 1"
dr. by: TARIQ
chk. by:

drawing no. 19-18F

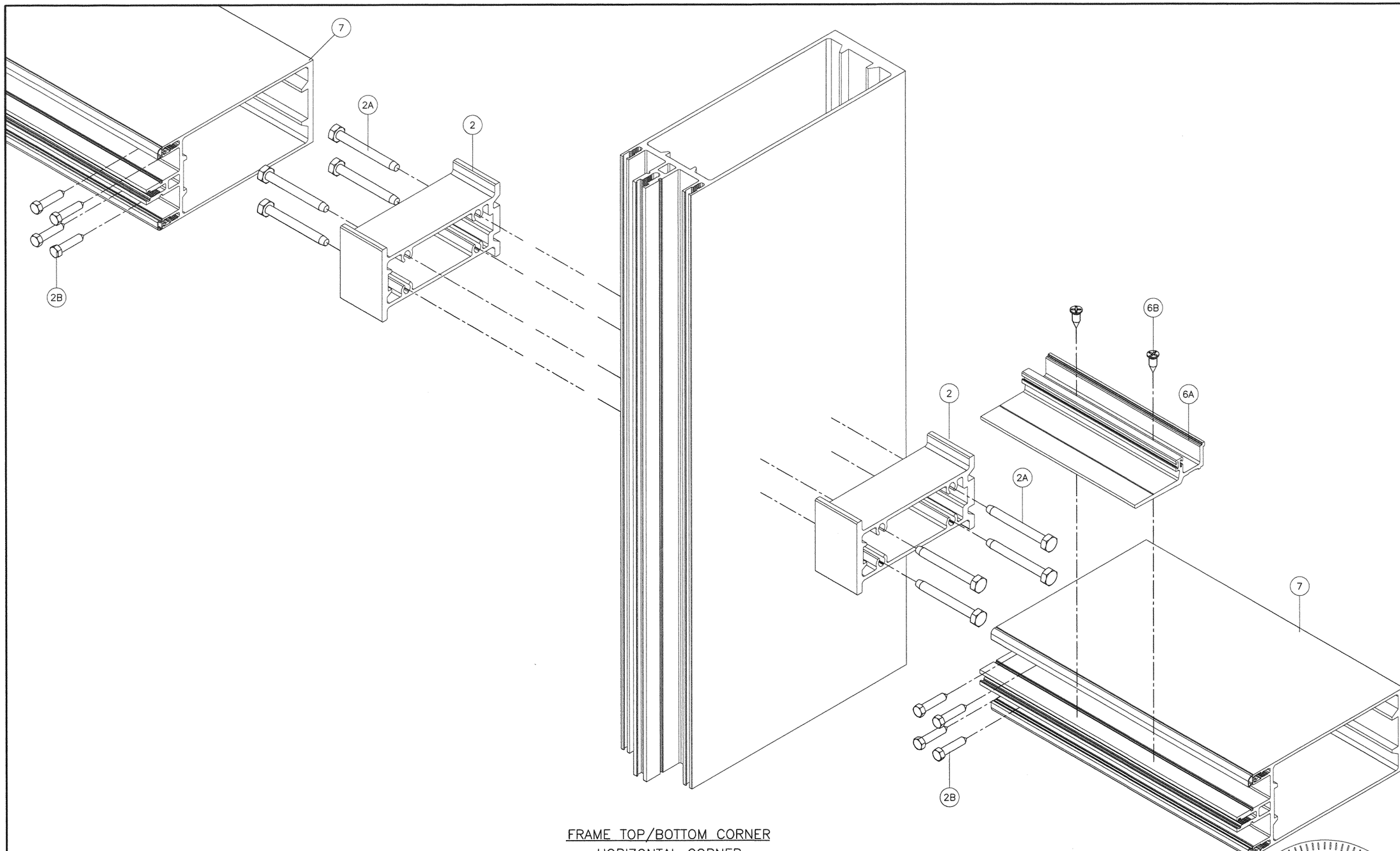

FRAME TOP/BOTTOM CORNER
HORIZONTAL CORNER
FOR ELEVATION SHOWN ON SHEETS 3.1 & 3.2

Sealed:8/12/2020

JALAL FAROOQ
LICENSE
No. 81223
STATE OF FLORIDA
PROFESSIONAL ENGINEER

FL #27401

AL-FAROOQ CORPORATION
ENGINEERS & PRODUCT DEVELOPMENT
9360 SUNSET DRIVE, SUITE 220
MIAMI, FLORIDA 33173 (C.A.N. 3538)
TEL. (305) 264-8100 FAX. (305) 262-6978

COMP-ANL\19-18F-MG

SERIES 2000 STICK ALUM. CURTAIN WALL SYS. (L.M.I.)

MR-GLASS DOORS & WINDOWS MANUFACTURING, LLC
8051 N.W. 79th Place
Medley, FL. 33166
Tel. (305) 764-3963 Fax. (305) 470-8285

revisions:

no	date	by	description

date: 03-15-19
scale: 3/8" = 1"
dr. by: TARIQ
chk. by:

drawing no.
19-18F

sheet 21.1 of 21