GENERAL NOTES AND SPECIFICATIONS:

1. SINGLE PANEL WOOD PIVOT DOOR SHOWN ON THIS PRODUCT EVALUATION DOCUMENT (P.E.D.) HAVE BEEN VERIFIED FOR COMPLIANCE IN ACCORDANCE WITH THE **2020 (7th EDITION)** OF THE FLORIDA BUILDING CODE (FBC). THIS PRODUCT MAY BE INSTALLED AT HIGH VELOCITY HURRICANE ZONES OR OUT OF IT.

DESIGN WIND LOADS SHALL BE DETERMINED AS PER SECTIONS 1620 & 1609 OF THE ABOVE MENTIONED CODE, USING **ASCE 7-16** AND SHALL NOT EXCEED THE MAXIMUM (A.S.D.) DESIGN PRESSURE RATING INDICATED ON NOTE 2 BELOW.

IN ORDER TO VERIFY THE ABOVE CONDITION, ULTIMATE DESIGN WIND LOADS DETERMINED PER ASCE **7-16** SHALL BE FIRST REDUCED TO A.S.D. DESIGN WIND LOADS BY MULTIPLYING THEM BY 0.6 IN ORDER TO COMPARE THESE W/ MAX. (A.S.D) DESIGN PRESSURE RATINGS INDICATED ON NOTE 2.

IN ORDER TO VERIFY THAT ANCHORS ON THIS P.E.D., AS TESTED, WERE NOT OVER STRESSED, A 33% INCREASE IN ALLOWABLE STRESS FOR WIND LOADS WAS NOT USED IN THEIR ANALYSIS.

THIS PRODUCT'S ADEQUACY FOR IMPACT AND CYCLIC RESISTANCE HAS BEEN VERIFIED IN ACCORDANCE WITH SECTIONS 1626 & 1609.1.2 OF THE ABOVE MENTIONED CODE AS PER PROTOCOLS TAS-201, TAS-202, TAS-203, PER FENESTRATION TESTING LABORATORY, INC. REPORT No. 9888 AND AS PER SUBMITTED STRUCTURAL CALCULATIONS, PERFORMED AS PER SECTIONS 1616 & 1604 OF THE FLORIDA BUILDING CODE.

2. **MAXIMUM (ALLOWABLE STRESS DESIGN=A.S.D) DESIGN PRESSURE RATING IS: +66.0 psf., -66.0 psf WITH REQUIRED HARDWARE, AS PER ELEVATIONS SHOWN ON SHEET 2.**

3A. THIS PRODUCT IS APPROVED FOR AIR INFILTRATION.

3B. THIS PRODUCT IS APPROVED FOR WATER INFILTRATION ONLY WHEN CANOPY IS PROVIDED IMMEDIATELY ABOVE THE DOOR LOCATION COVERING THE ENTIRE WIDTH OF DOOR AND PROJECTING OUT A DISTANCE EQUAL OR LARGER THAN THE DOOR HEIGHT, PER FLORIDA BUILDING CODE SECTION 1709.5.2.

4. ALL COMPONENTS SHALL BE AS PER BILL OF MATERIALS ON SHEET 6.

5. WOOD BUCKS BY OTHERS, MUST BE SOUTHERN PINE #2, G=0.55, AND SHALL COMPLY WITH SECTIONS 2411.3.3.3 & 2326 OF THE FLORIDA BUILDING CODE, AND MUST BE ANCHORED PROPERLY TO TRANSFER LOADS TO THE BUILDING STRUCTURE AND TO BE REVIEWED BY BUILDING OFFICIAL.

6. PROVIDE 1/4" MAX. LOAD BEARING SHIM SPACE (TYP.), WHEN ALLOWED BY THIS DRAWING.

7. ALL DOOR FRAME MEMBERS SHALL BE ANCHORED TO EXISTING STRUCTURE FOLLOWING SPECS INDICATED ON SHEETS 2, 7 & 8 AS APPLICABLE.

8. **THIS PRODUCT WILL NOT REQUIRE A HURRICANE PROTECTION DEVICE.**

9. PRODUCT MANUFACTURER'S LABEL SHALL BE PLACED ON A READILY VISIBLE LOCATION AT FENESTRATION IN ACCORDANCE WITH SECTION 1709.9.3 OF THE FLORIDA BUILDING CODE. ONE LABEL SHALL BE PLACED FOR EVERY OPENING.
LABELING TO COMPLY WITH SECTION 1709.9.2 OF THE FLORIDA BUILDING CODE.

10. THIS PRODUCT'S INSTALLATION SHALL STRICTLY COMPLY WITH SPECS INDICATED ON THIS DRAWING PLUS ANY BUILDING AND ZONING REGULATIONS PROVIDED BY THE JURISDICTION WHERE PERMIT IS APPLIED TO.

11. ALL DOOR COMPONENT EDGES WHICH REMAIN IN CONTINUOUS CONTACT WITH THE BUILDING SHALL BE SEALED/CAULK TO PREVENT WIND/RAIN INTRUSION. CAULK AND SEAL ALL AROUND FULL LENGTH.

12. (a) THIS P.E.D. PREPARED BY THIS ENGINEER IS GENERIC AND DOES NOT PROVIDE INFORMATION FOR A SITE SPECIFIC PROJECT; i.e. WHERE THE SITE CONDITIONS DEVIATE FROM THE P.E.D.

(b) CONTRACTOR TO BE RESPONSIBLE FOR THE SELECTION, PURCHASE AND INSTALLATION INCLUDING LIFE SAFETY OF THIS PRODUCT, BASED ON THIS P.E.D., PROVIDED HE/SHE DOES NOT DEVIATE FROM THE CONDITIONS DETAILED ON THIS DOCUMENT. CONSTRUCTION SAFETY AT SITE IS THE CONTRACTOR'S RESPONSIBILITY.

(c) THIS P.E.D. WILL BE CONSIDERED INVALID IF ALTERED BY ANY MEANS.

(d) SITE SPECIFIC PROJECTS SHALL BE PREPARED BY A FLORIDA REGISTERED ENGINEER OR ARCHITECT WHICH WILL BECOME THE ENGINEER OF RECORD (P.O.R.) FOR THE PROJECT AND WHO WILL BE RESPONSIBLE FOR THE PROPER USE OF THE P.E.D. ENGINEER OF RECORD, ACTING AS A DELEGATED ENGINEER TO THE P.E.D. ENGINEER SHALL SUBMIT TO THIS LATTER THE SITE SPECIFIC DRAWINGS FOR REVIEW.

(e) ORIGINAL P.E.D. SHALL BEAR THE DATE AND ORIGINAL SEAL AND SIGNATURE OF THE PROFESSIONAL ENGINEER OF RECORD THAT PREPARED IT.

THIS DRAWING SHALL ONLY BE USED TO OBTAIN PERMITS IN THE STATE OF FLORIDA

WALTER A. TILLIT JR. LICENSE No. 44167 STATE OF FLORIDA PROFESSIONAL ENGINEER

10/10/2020

P.E. SEAL/SIGNATURE/DATE

©2020 TILTECO, INC.

TILTECO INC.
TILLIT TESTING & ENGINEERING COMPANY
6355 N.W. 36th. St., Ste. 305, VIRGINIA GARDENS, FL 33166
Phone : (305)871-1530 . Fax : (305)871-1531
CA-0006719
WALTER A. TILLIT Jr. P.E.
FLORIDA Lic. # 44167

FLORIDA BUILDING CODE (HIGH & NON HIGH VELOCITY HURRICANE ZONE)

SINGLE PANEL SOLID/GLAZED WOOD PIVOT DOOR (LARGE MISSILE IMPACT RESISTANT)

IMPACT PRECIOUS WOOD, INC.
6333 NW 74 AVE.,
MIAMI, FL 33166
PH: (786) 222-0427, FAX: (305) 428-3011

REV. NO	DESCRIPTION	DATE	REV. No	DESCRIPTION	DATE
1	OLD 17-047	10/12/20	3		
2			4		

M.P.
DRAWN BY:

10/12/2020
DATE:

20-290
DRAWING No.

SHEET 1 OF 10

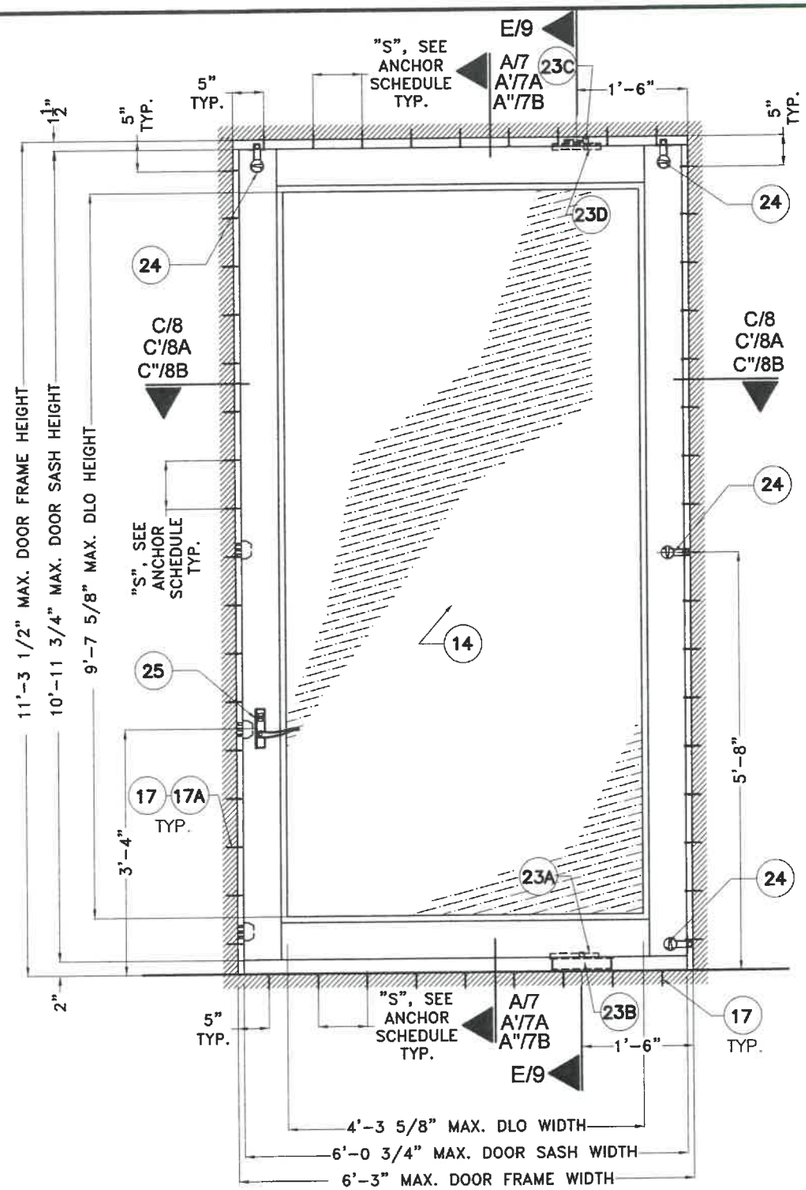

TYPICAL EXTERIOR ELEVATION (GLAZED WOOD DOOR)

SCALE 1/2"=1'-0"

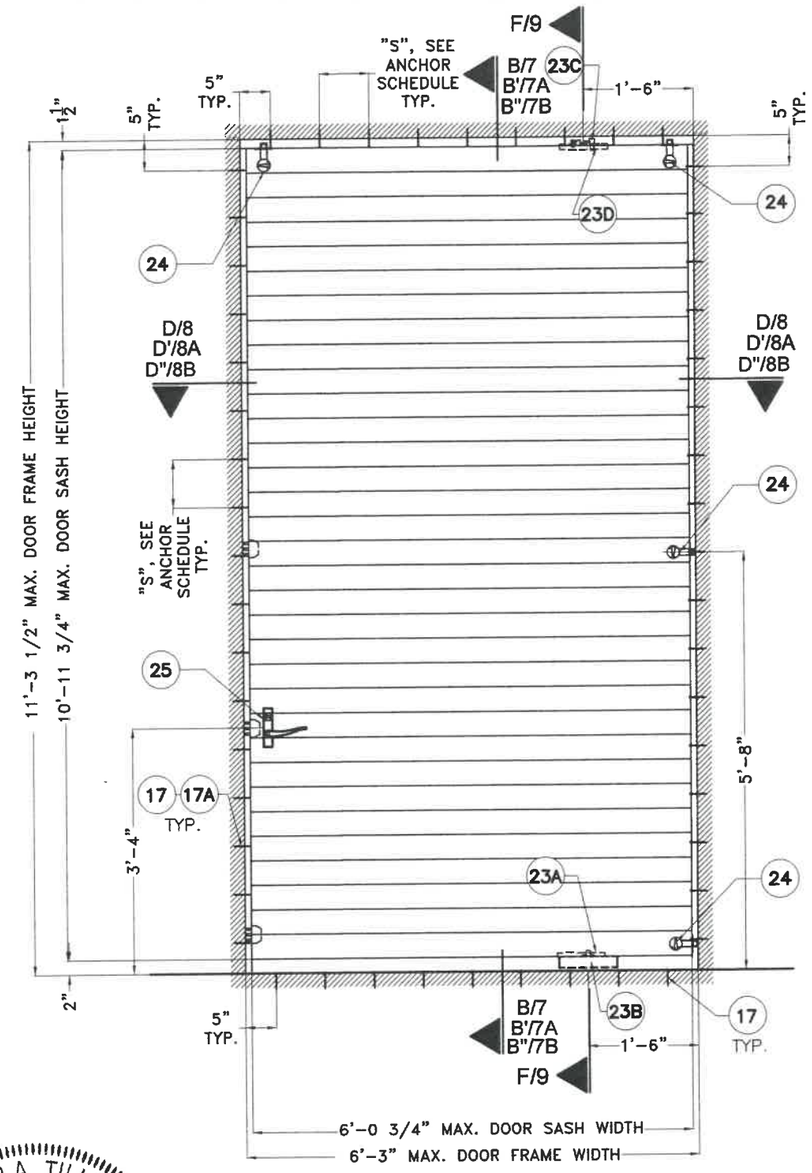

TYPICAL EXTERIOR ELEVATION (SOLID WOOD DOOR)

SCALE 1/2"=1'-0"

SCHEDULE FOR MAX. SPACING FOR ANCHOR (17) AND (17A) AT JAMBS, HEAD & SILL

A.S.D DESIGN PRESSURE RATING W (PSF)	"S"			
	CONCRETE (Min. f'c = 2846 psi) OR CONCRETE BLOCK (Min. ASTM C-90)	WOOD (Min. G=0.55)	METAL	
			ALUMINUM	STEEL
			Fy> = 16 ksi 1/8" THK	Fy = 33 ksi 16 gage
±66.0	8" O.C @ (17)	6 1/2" O.C @ (17)	6 1/2" O.C @ (17A)	

WALTER A. TILLIT JR. LICENSE No. 44167 STATE OF FLORIDA PROFESSIONAL ENGINEER

10/13/2020

P.E. SEAL/SIGNATURE/DATE

©2020 TILTECO, INC.

TILTECO INC.

TILLIT TESTING & ENGINEERING COMPANY
6355 N.W. 36th. St., Ste. 305, VIRGINIA GARDENS, Fl. 33166
Phone : (305)871-1530 . Fax : (305)871-1531
CA-0006719
WALTER A. TILLIT Jr. P.E.
FLORIDA Lic. # 44167

FLORIDA BUILDING CODE (HIGH & NON HIGH VELOCITY HURRICANE ZONE)

SINGLE PANEL SOLID/GLAZED WOOD PIVOT DOOR (LARGE MISSILE IMPACT RESISTANT)

IMPACT PRECIOUS WOOD, INC.
6333 NW 74 AVE.,
MIAMI, FL 33166
PH: (786) 222-0427, FAX: (305) 428-3011

REV. NO	DESCRIPTION	DATE	REV. No	DESCRIPTION	DATE
1	OLD 17-047	10/12/20	3		
2			4		

M.P.
DRAWN BY:

10/12/2020
DATE:

20-290
DRAWING No.

SHEET 2 OF 10

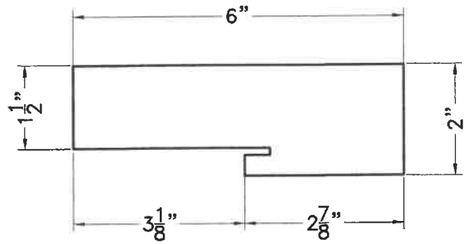

1 FRAME HEAD/LOCK JAMB @ GLASS DOOR

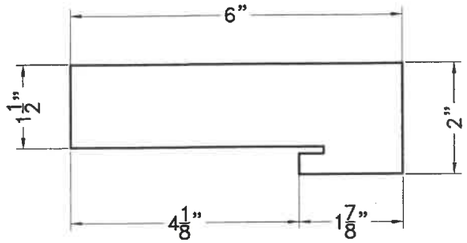

2 FRAME HEAD/LOCK JAMB @ WOOD DOOR

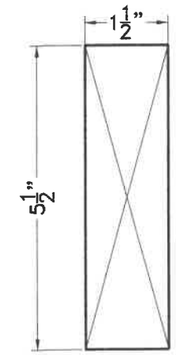

3 PIVOT SIDE JAMB
(2"x6" NOMINAL)

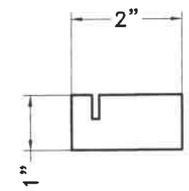

4 PANEL STOP

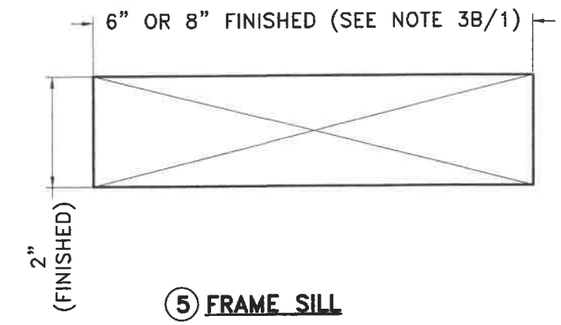

5 FRAME SILL

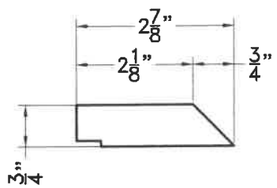

6 PANEL STOP @ FRAME SILL @ GLASS DOOR

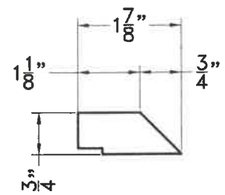

7 PANEL STOP @ FRAME SILL @ WOOD DOOR

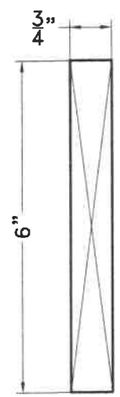

8 TOP/BOTTOM RAIL & STILE REINFORCEMENT

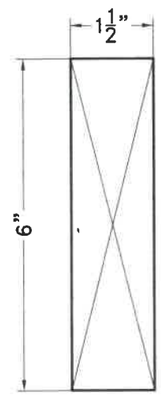

9 TOP/BOTTOM RAIL & STILE CORE

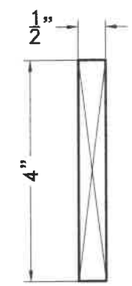

10 CLADDING FOR WOOD DOOR

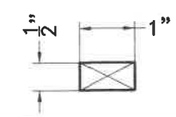

10A CLADDING REINFORCEMENT

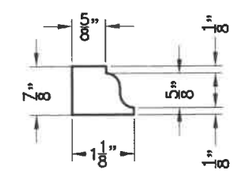

11 GLAZING BEAD

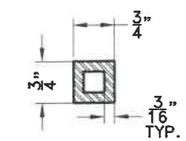

12 STEEL REINFORCING TUBE @ SASH

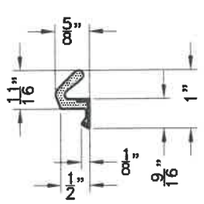

18 Q-LON DOOR SEAL
NTS

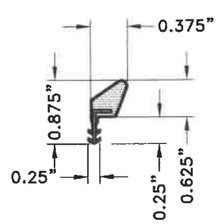

19 Q-LON WEATHER SEAL
NTS

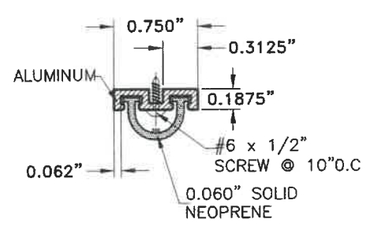

26 WEATHERSTRIP
NTS

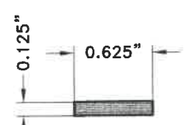

27 SETTING BLOCK
NTS

COMPONENTS

SCALE 3/8"=1"

FLORIDA BUILDING CODE (HIGH & NON HIGH VELOCITY HURRICANE ZONE)

WALTER A. TILLIT JR. LICENSE No. 44167 STATE OF FLORIDA PROFESSIONAL ENGINEER

P.E. SEAL/SIGNATURE/DATE

©2020 TILTECO, INC.

TILTECO INC.
TILLIT TESTING & ENGINEERING COMPANY
6355 N.W. 36th. St., Ste. 305, VIRGINIA GARDENS, FL 33166
Phone : (305)871-1530 . Fax : (305)871-1531
CA-0006719
WALTER A. TILLIT Jr. P.E.
FLORIDA Lic. # 44167

SINGLE PANEL SOLID/GLAZED WOOD PIVOT DOOR (LARGE MISSILE IMPACT RESISTANT)

IMPACT PRECIOUS WOOD, INC.
6333 NW 74 AVE.,
MIAMI, FL 33166
PH: (786) 222-0427, FAX: (305) 428-3011

REV. NO	DESCRIPTION	DATE	REV. No	DESCRIPTION	DATE
1	OLD 17-047	10/12/20	3		
2			4		

M.P.
DRAWN BY:

10/12/2020
DATE:

20-290
DRAWING No.

SHEET 3 OF 10

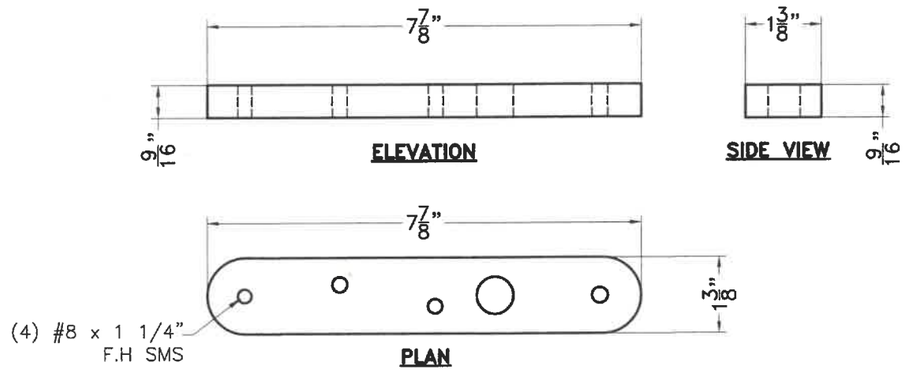

23A PIVOT DEVICE @ BOTTOM RAIL
SCALE 3/4"=1"

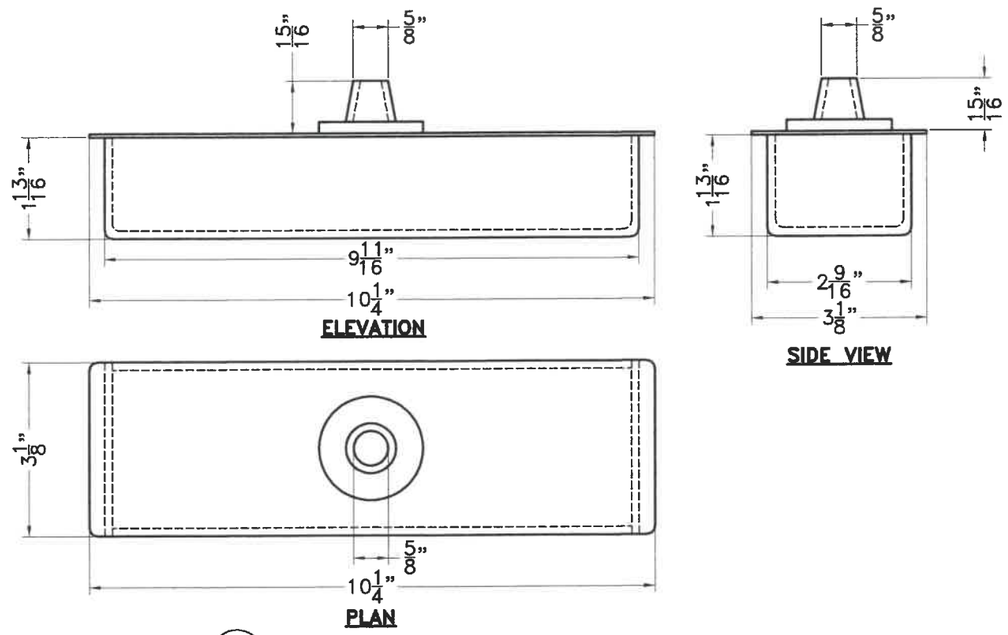

23B PIVOT DEVICE @ SILL
SCALE 3/4"=1"

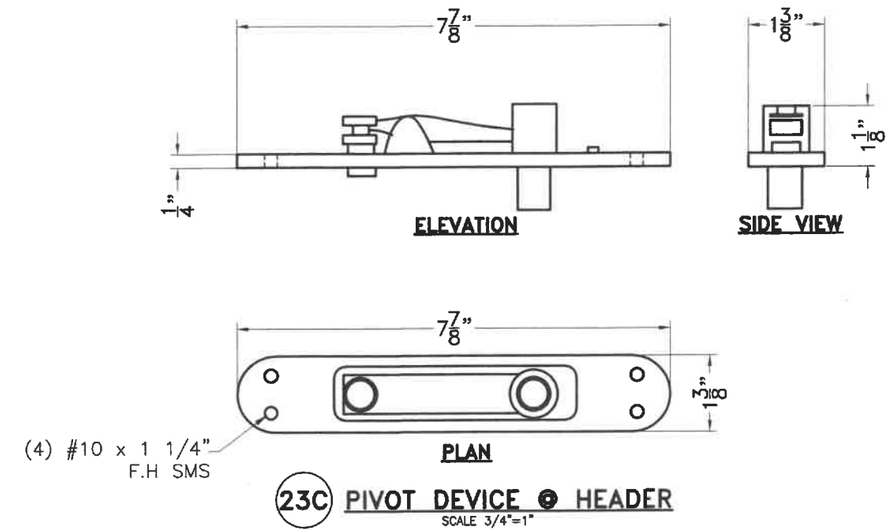

23C PIVOT DEVICE @ HEADER
SCALE 3/4"=1"

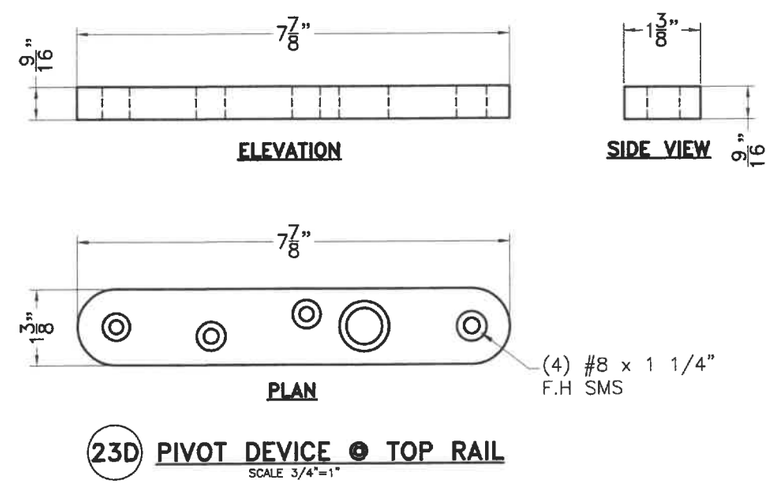

23D PIVOT DEVICE @ TOP RAIL
SCALE 3/4"=1"

23 MODEL JK.05.500 PIVOT SYSTEM

COMPONENTS CONT'D.

SCALE 3/8"=1"

WALTER A. TILLIT JR.
LICENSE
No. 44167
STATE OF FLORIDA
PROFESSIONAL ENGINEER

10/13/2020

P.E. SEAL/SIGNATURE/DATE

FLORIDA BUILDING CODE (HIGH & NON HIGH VELOCITY HURRICANE ZONE)

©2020 TILTECO, INC.

TILTECO INC.
TILLIT TESTING & ENGINEERING COMPANY
6355 N.W. 36th. St., Ste. 305, VIRGINIA GARDENS, FL 33166
Phone : (305)871-1530 . Fax : (305)871-1531
CA-0006719
WALTER A. TILLIT Jr. P.E.
FLORIDA Llc. # 44167

SINGLE PANEL SOLID/GLAZED WOOD PIVOT DOOR (LARGE MISSILE IMPACT RESISTANT)

IMPACT PRECIOUS WOOD, INC.
6333 NW 74 AVE.,
MIAMI, FL 33166
PH: (786) 222-0427, FAX: (305) 428-3011

REV. NO	DESCRIPTION	DATE	REV. No	DESCRIPTION	DATE
1	OLD 17-047	10/12/20	3		
2			4		

M.P.
DRAWN BY:

10/12/2020
DATE:

20-290
DRAWING No.

SHEET 4 OF 10

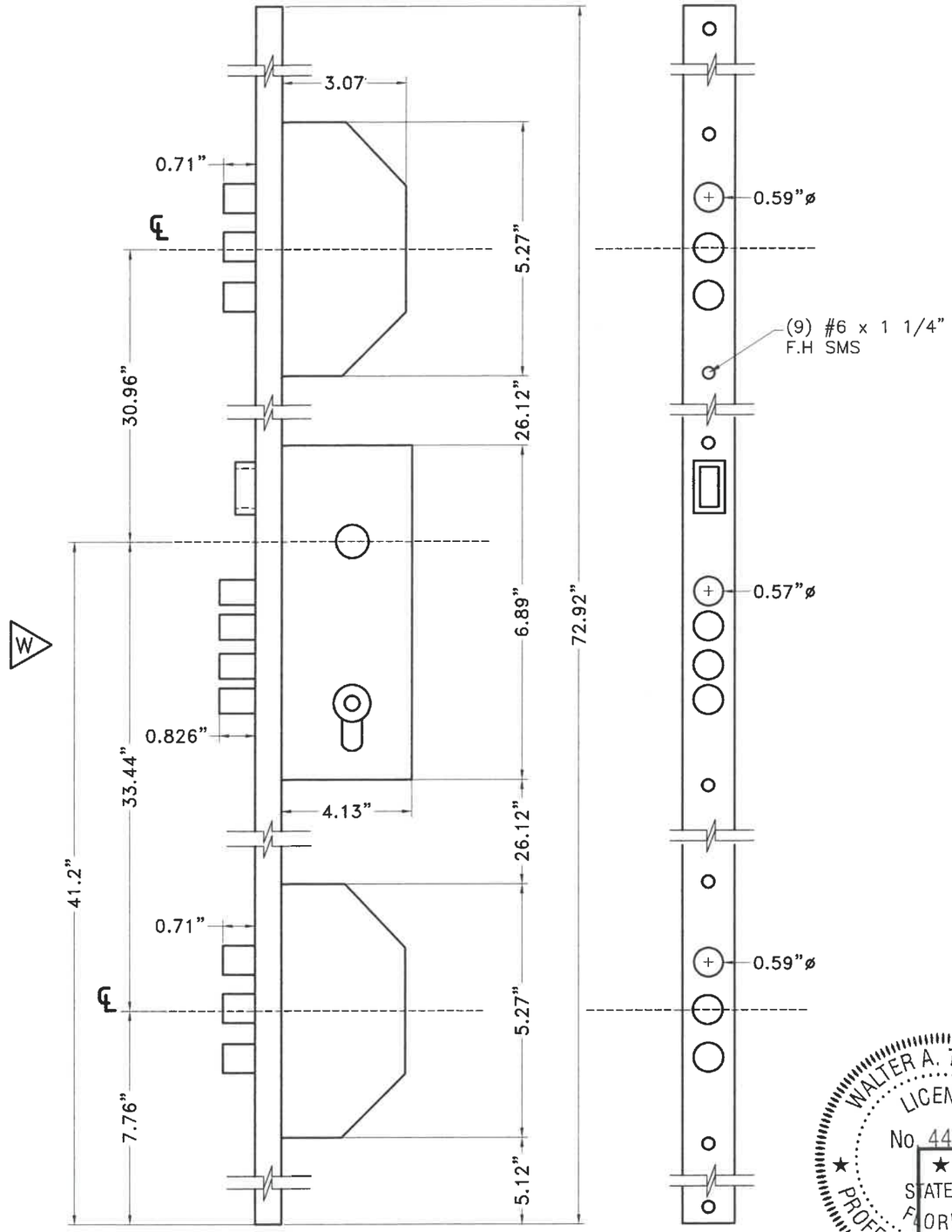

25 3 POINT LOCK

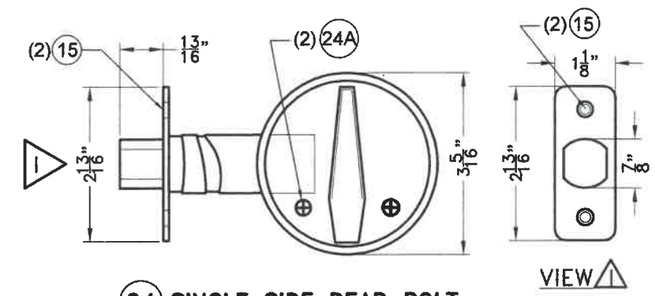

24 SINGLE SIDE DEAD BOLT

COMPONENTS CONT'D.

SCALE 3/8"=1"

WALTER A. TILLIT JR. LICENSE No 44167 STATE OF FLORIDA PROFESSIONAL ENGINEER

8/2020

P.E. SEAL/SIGNATURE/DATE

FLORIDA BUILDING CODE (HIGH & NON HIGH VELOCITY HURRICANE ZONE)

©2020 TILTECO, INC.

TILTECO INC.
TILLIT TESTING & ENGINEERING COMPANY
6355 N.W. 36th. St., Ste. 305, VIRGINIA GARDENS, FL. 33166
Phone : (305)871-1530 . Fax : (305)871-1531
CA-0006719
WALTER A. TILLIT Jr. P.E.
FLORIDA Lic. # 44167

SINGLE PANEL SOLID/GLAZED WOOD PIVOT DOOR (LARGE MISSILE IMPACT RESISTANT)

IMPACT PRECIOUS WOOD, INC.
6333 NW 74 AVE.,
MIAMI, FL 33166
PH: (786) 222-0427, FAX: (305) 428-3011

REV. NO	DESCRIPTION	DATE	REV. No	DESCRIPTION	DATE
1	OLD 17-047	10/12/20	3		
2			4		

M.P.
DRAWN BY:

10/12/2020
DATE:

20-290
DRAWING No.

SHEET 5 OF 10

BILL OF MATERIALS

COMPONENT #	DESCRIPTION	MATERIAL	MANUFACTURER	NOTES
1	FRAME HEAD / LOCK JAMB @ GLASS DOOR	MAHOGANY WOOD	–	G=0.45 MIN.
2	FRAME HEAD / LOCK JAMB @ GLASS DOOR	MAHOGANY WOOD	–	G=0.45 MIN.
3	PIVOT SIDE JAMB	MAHOGANY WOOD	–	G=0.45 MIN.
4	PANEL STOP	MAHOGANY WOOD	–	G=0.45 MIN.
5	FRAME SILL	MAHOGANY WOOD	–	G=0.45 MIN. SEE GENERAL NOTE 3B/1 FOR REQUIRED FINISHED SIZE.
6	PANEL STOP @ FRAME SILL @ GLASS DOOR	MAHOGANY WOOD	–	G=0.45 MIN. W/ 15 , FIRST @ 3", BALANCE @ 10"O.C.
7	PANEL STOP @ FRAME SILL @ WOOD DOOR	MAHOGANY WOOD	–	G=0.45 MIN. W/ 15 , FIRST @ 3", BALANCE @ 10"O.C.
8	TOP / BOTTOM RAIL & STILE REINFORCEMENT	MAHOGANY WOOD	–	G=0.45 MIN.
9	TOP / BOTTOM RAIL & STILE CORE	MAHOGANY WOOD	–	G=0.45 MIN.
10	CLADDING FOR WOOD DOOR (1/2" THK.)	MAHOGANY WOOD	–	G=0.45 MIN.
10A	CLADDING REINFORCEMENT	MAHOGANY WOOD	–	G=0.45 MIN.
11	GLAZING BEAD	MAHOGANY WOOD	–	W/ 16, FIRST @ 2", BALANCE @ 10"O.C.
12	STEEL REINFORCING TUBE @ SASH	ASTM A–36 GALV. STEEL	–	W/ 15 , FIRST @ 3", BALANCE @ 10"O.C. & WELDED TO TRANSVERSE 12 AT CORNERS.
13	MDF PANELS (3/4" THK.)	ENGINEERED WOOD	–	USED AS CORE ONLY AT WOOD PANEL DOOR
14	9/16" NOMINAL LAMINATED GLASS	GLASS	–	1/4" HEAT STRENGTHENED + 0.090" SGP INTERLAYER BY KURARAY + 1/4" HEAT STRENGTHENED
15	#10x1 3/4" F.H. WOOD SCREW	STAINLESS STEEL	–	SPACED 10"O.C.
16	16 GAGE x 1 1/2" FINISHING NAILS	STEEL	–	FIRST @ 2", BALANCE @ 10"O.C.
17	1/4"ø ULTRACON ANCHORS	AISI 410 SERIES STAINLESS STEEL	ELCO CONSTRUCTION PRODUCTS	1 1/2"MIN. EMB. & 1"MIN. ED. INTO WOOD BUCK, 1 1/4"MIN. EMB. & 2 1/2" MIN. ED. INTO CONCRETE BLOCK & 1 3/4"MIN. EMB. & 2 1/2" MIN. ED. INTO POURED CONCRETE BEYOND ANY FINISH
17A	1/4"ø–14 TEK SCREWS	AISI 410 S.S.	ITW BUILDEX	1" MINIMUM E.D & MUST EXTEND FROM METAL SUBSTRATE 3 THREADS. SEE SHEET 2.
18	Q–LON DOOR SEAL	–	SCHLEGEL	# QDS 650
19	Q–LON WEATHER SEAL	–	SCHLEGEL	# QEZD 320
20	SEALANT – CLEAR SILICONE	–	"GE" STOCK	# GE0112A SILICONE
21	GLAZING – CLEAR SILICONE	–	"DOW CORNING"	# 995 SILICONE
22	CORNER CONSTRUCTION GLUE	–	–	CHEMICAL BOND WW25
23	PIVOT SYSTEM/MODEL JK.05.500	STAINLESS STEEL	JNF	23A FASTENED W/ (4)#8 x 1 1/4" FH SMS; 23B NO FASTENING REQ'D.; 23C FASTENED W/ (4)#10 x 1 1/4" FH SMS; 23D FASTENER W/ (4)#8 x 1 1/4" FH SMS
24	SINGLE SIDE DEAD BOLT	POLISHED BRASS	SCHLAGE	MODEL B580605 W/ (2) 15 @ OPERATOR & 24A @ STRIKE
24A	#8x1" F.H. WOOD SCREW	STAINLESS STEEL	–	
25	3 POINT LOCK	ALUMINUM/STEEL	MCM	SERIES 701, 3 LOCKING POINTS W/ MIN. 3/4" THROW, W/ (9)#6 x 1 1/4" FH SMS TO STILE
26	WEATHERSTRIP	ALUMINUM/RUBBER	TRADEMARK HARDWARE	#6 x 1/2" @ 10"O.C TO SILL 5 . MODEL SKU Z53–DB
27	SETTING BLOCK	–	–	SHALL COMPLY W/ SECTION 2411.3.3.1 OF THE FLORIDA BUILDING CODE

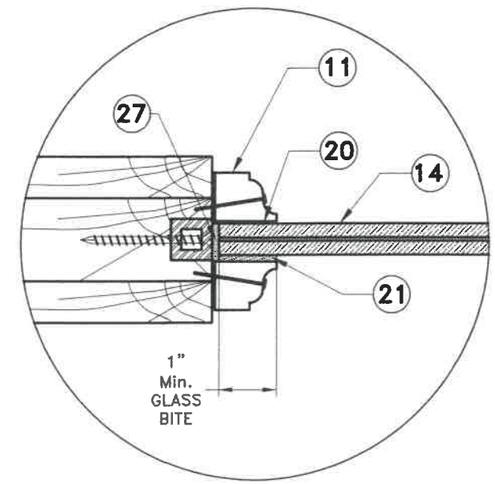

GLAZING DETAIL

SCALE 3/8"=1"

FLORIDA BUILDING CODE (HIGH & NON HIGH VELOCITY HURRICANE ZONE)

WALTER A. TILLIT JR. LICENSE No. 44167 STATE OF FLORIDA PROFESSIONAL ENGINEER

10/12/2020

SEAL/SIGNATURE/DATE

©2020 TILTECO, INC.

TILTECO INC.
TILLIT TESTING & ENGINEERING COMPANY
6355 N.W. 36th. St., Ste. 305, VIRGINIA GARDENS, Fl. 33166
Phone : (305)871–1530 . Fax : (305)871–1531
CA–0006719
WALTER A. TILLIT Jr. P.E.
FLORIDA Llc. # 44167

SINGLE PANEL SOLID/GLAZED WOOD PIVOT DOOR (LARGE MISSILE IMPACT RESISTANT)

IMPACT PRECIOUS WOOD, INC.
6333 NW 74 AVE.,
MIAMI, FL 33166
PH: (786) 222–0427, FAX: (305) 428–3011

REV. NO	DESCRIPTION	DATE	REV. No	DESCRIPTION	DATE
1	OLD 17–047	10/12/20	3		
2			4		

M.P.
DRAWN BY:

10/12/2020
DATE:

20–290
DRAWING No.

SHEET 6 OF 10

FLORIDA BUILDING CODE (HIGH & NON HIGH VELOCITY HURRICANE ZONE)

WALTER A. TILLIT JR. LICENSE No. 44167 STATE OF FLORIDA PROFESSIONAL ENGINEER

P.E. SEAL/SIGNATURE/DATE

©2020 TILTECO, INC.

TILTECO INC.
TILLIT TESTING & ENGINEERING COMPANY
6355 N.W. 36th. St., Ste. 305, VIRGINIA GARDENS, FL 33166
Phone : (305)871-1530 . Fax : (305)871-1531
CA-0006719
WALTER A. TILLIT Jr. P.E.
FLORIDA Lic. # 44167

SINGLE PANEL SOLID/GLAZED WOOD PIVOT DOOR (LARGE MISSILE IMPACT RESISTANT)

IMPACT PRECIOUS WOOD, INC.
6333 NW 74 AVE.,
MIAMI, FL 33166
PH: (786) 222-0427, FAX: (305) 428-3011

REV. NO	DESCRIPTION	DATE	REV. No	DESCRIPTION	DATE
1	OLD 17-047	10/12/20	3		
2			4		

M.P.
DRAWN BY:

10/12/2020
DATE:

20-290
DRAWING No.

SHEET 7 OF 10

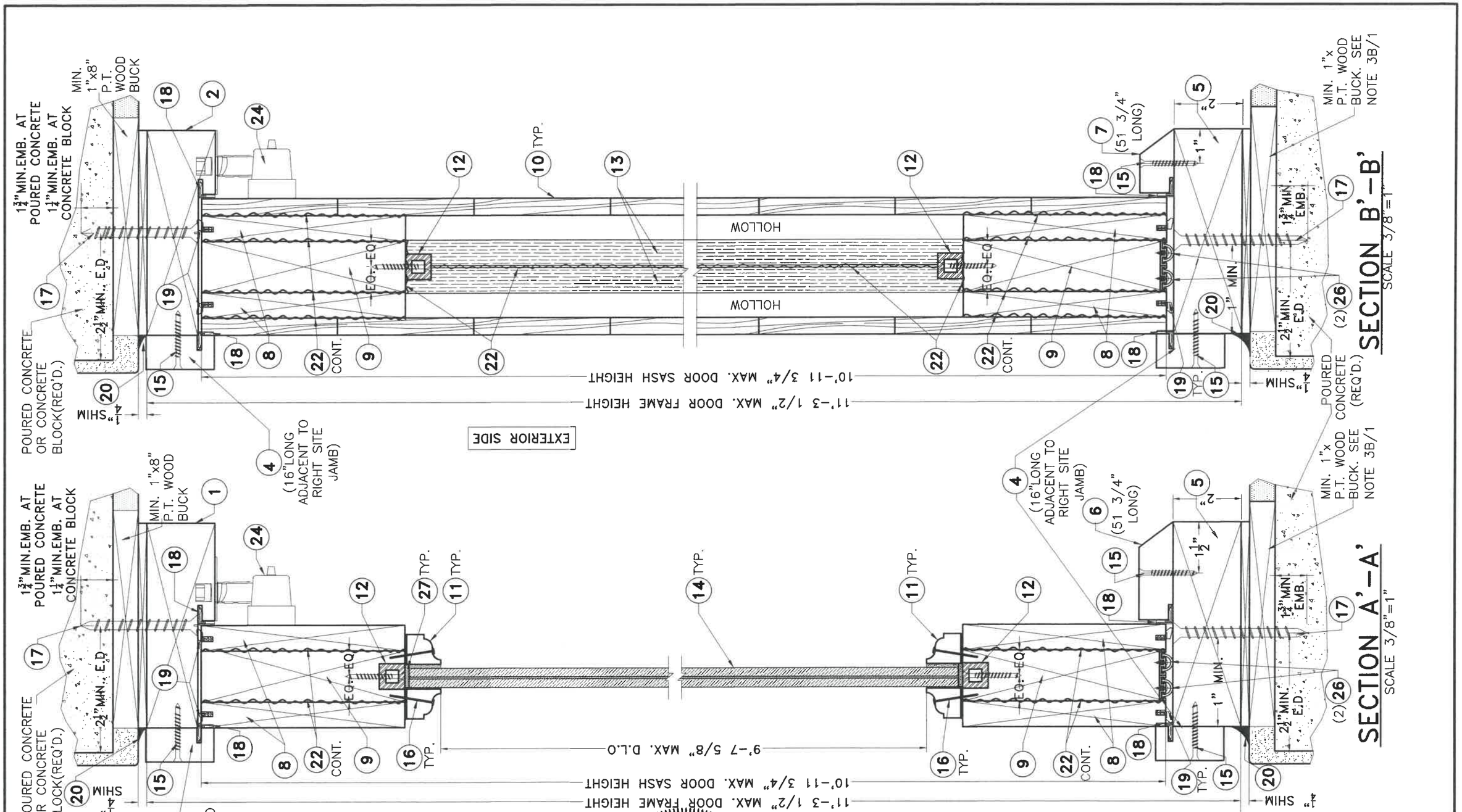

FLORIDA BUILDING CODE (HIGH & NON HIGH VELOCITY HURRICANE ZONE)

WALTER A. TILLIT JR. LICENSE No. 44167 STATE OF FLORIDA PROFESSIONAL ENGINEER

SEAL/SIGNATURE/DATE

©2020 TILTECO, INC.

TILTECO INC.
TILLIT TESTING & ENGINEERING COMPANY
6355 N.W. 36th. St., Ste. 305, VIRGINIA GARDENS, Fl. 33166
Phone : (305)871-1530 . Fax : (305)871-1531
CA-0006719
WALTER A. TILLIT Jr. P.E.
FLORIDA Lic. # 44167

SINGLE PANEL SOLID/GLAZED WOOD PIVOT DOOR (LARGE MISSILE IMPACT RESISTANT)

IMPACT PRECIOUS WOOD, INC.
6333 NW 74 AVE.,
MIAMI, FL 33166
PH: (786) 222-0427, FAX: (305) 428-3011

REV. NO	DESCRIPTION	DATE	REV. No	DESCRIPTION	DATE
1	OLD 17-047	10/12/20	3		
2			4		

M.P.
DRAWN BY:

10/12/2020
DATE:

20-290
DRAWING No.

SHEET 7A OF 10

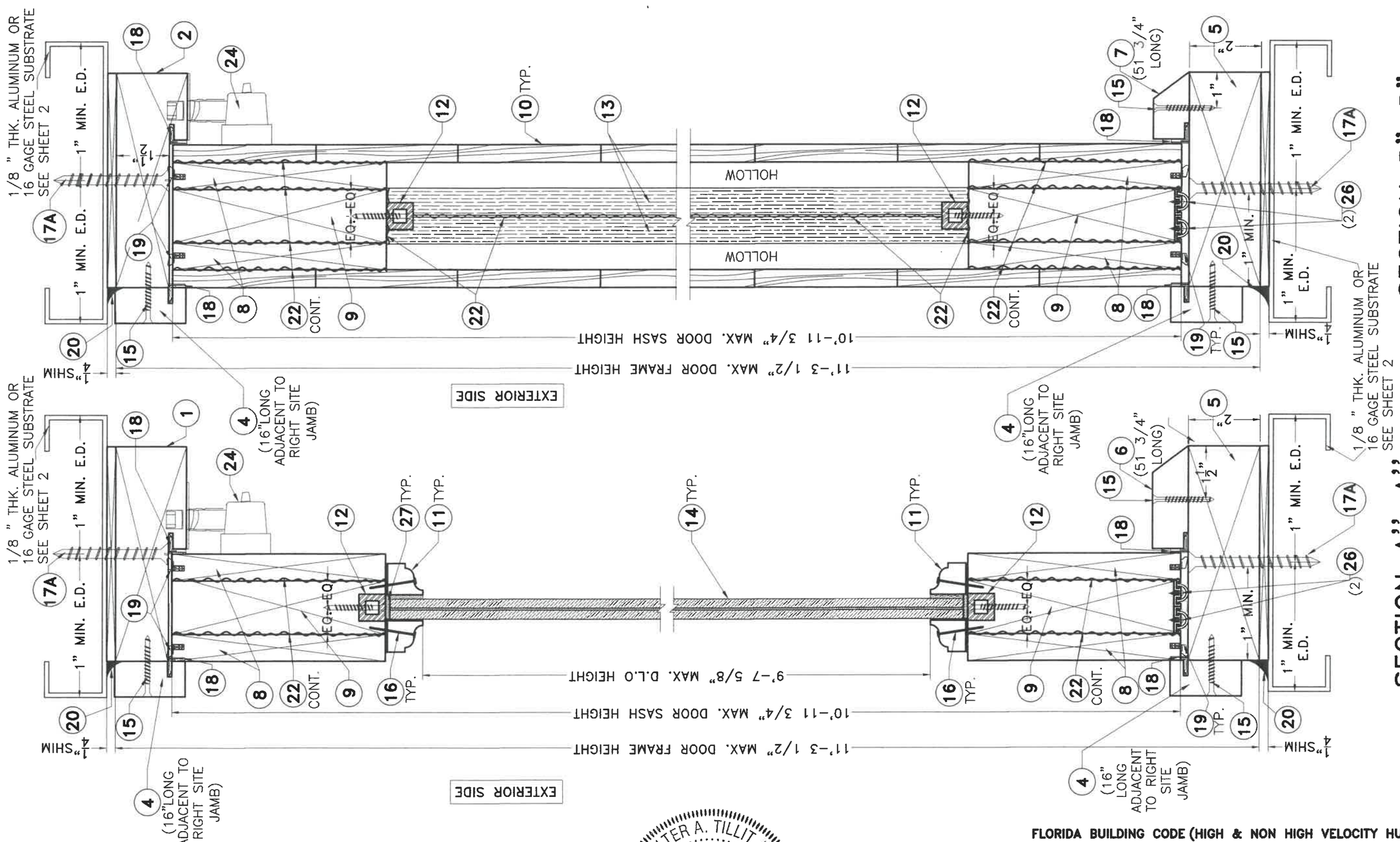

FLORIDA BUILDING CODE (HIGH & NON HIGH VELOCITY HURRICANE ZONE)

WALTER A. TILLIT JR. LICENSE No. 44167 STATE OF FLORIDA PROFESSIONAL ENGINEER

SEAL/SIGNATURE/DATE

©2020 TILTECO, INC.

TILTECO INC.

TILLIT TESTING & ENGINEERING COMPANY
6355 N.W. 36th. St., Ste. 305, VIRGINIA GARDENS, Fl. 33166
Phone : (305)871-1530 . Fax : (305)871-1531
CA-0006719
WALTER A. TILLIT Jr. P.E.
FLORIDA Lic. # 44167

SINGLE PANEL SOLID/GLAZED WOOD PIVOT DOOR (LARGE MISSILE IMPACT RESISTANT)

IMPACT PRECIOUS WOOD, INC.
6333 NW 74 AVE.,
MIAMI, FL 33166
PH: (786) 222-0427, FAX: (305) 428-3011

REV. NO	DESCRIPTION	DATE	REV. No	DESCRIPTION	DATE
1	OLD 17-047	10/12/20	3		
2			4		

M.P.
DRAWN BY:

10/12/2020
DATE:

20-290
DRAWING No.

SHEET 7B OF 10

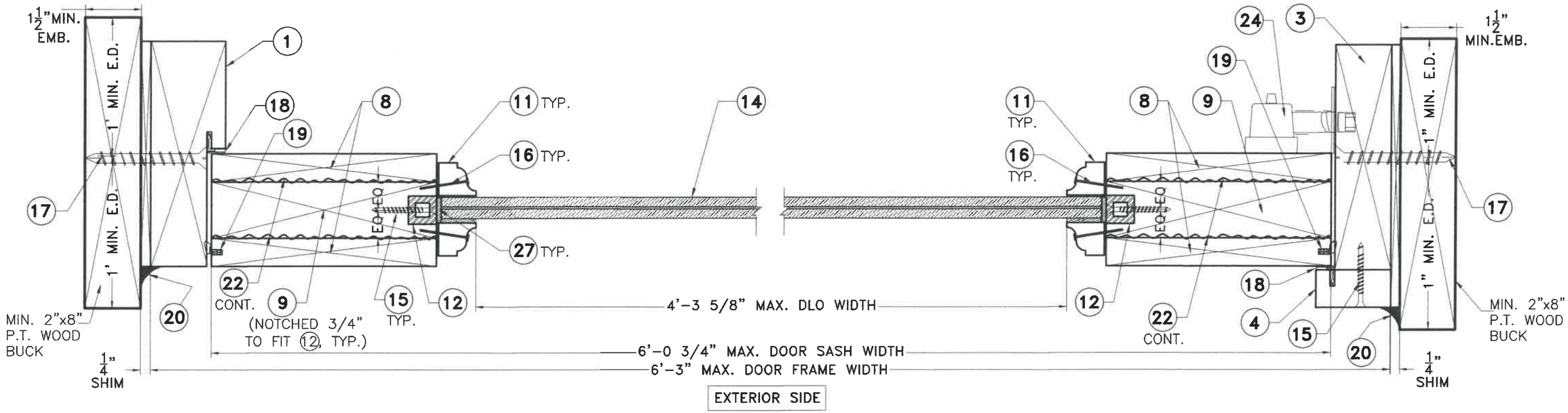

SECTION C–C

SCALE 3/8"=1"

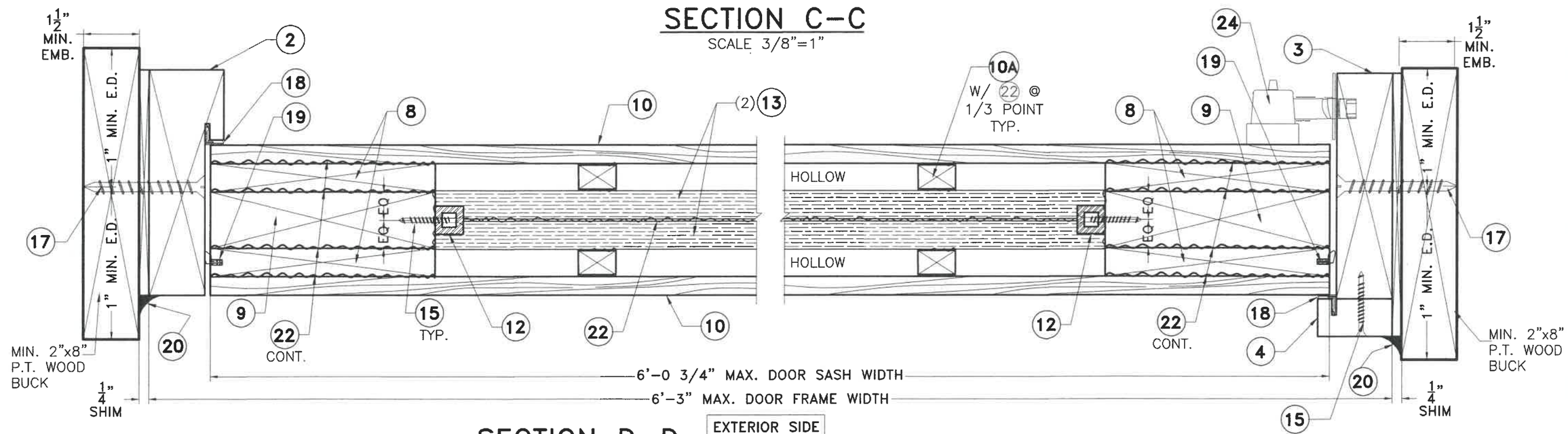

SECTION D–D

SCALE 3/8"=1"

FLORIDA BUILDING CODE (HIGH & NON HIGH VELOCITY HURRICANE ZONE)

WALTER A. TILLIT JR. LICENSE No. 44167 STATE OF FLORIDA PROFESSIONAL ENGINEER

SEAL/SIGNATURE/DATE 8/2020

©2020 TILTECO, INC.

TILTECO INC.

TILLIT TESTING & ENGINEERING COMPANY
6355 N.W. 36th. St., Ste. 305, VIRGINIA GARDENS, Fl. 33166
Phone : (305)871-1530 . Fax : (305)871-1531
CA-0006719
WALTER A. TILLIT Jr. P.E.
FLORIDA Lic. # 44167

SINGLE PANEL SOLID/GLAZED WOOD PIVOT DOOR (LARGE MISSILE IMPACT RESISTANT)

IMPACT PRECIOUS WOOD, INC.
6333 NW 74 AVE.,
MIAMI, FL 33166
PH: (786) 222-0427, FAX: (305) 428-3011

REV. NO	DESCRIPTION	DATE	REV. No	DESCRIPTION	DATE
1	OLD 17-047	10/12/20	3		
2			4		

M.P.
DRAWN BY:

10/12/2020
DATE:

20-290
DRAWING No.

SHEET 8 OF 10

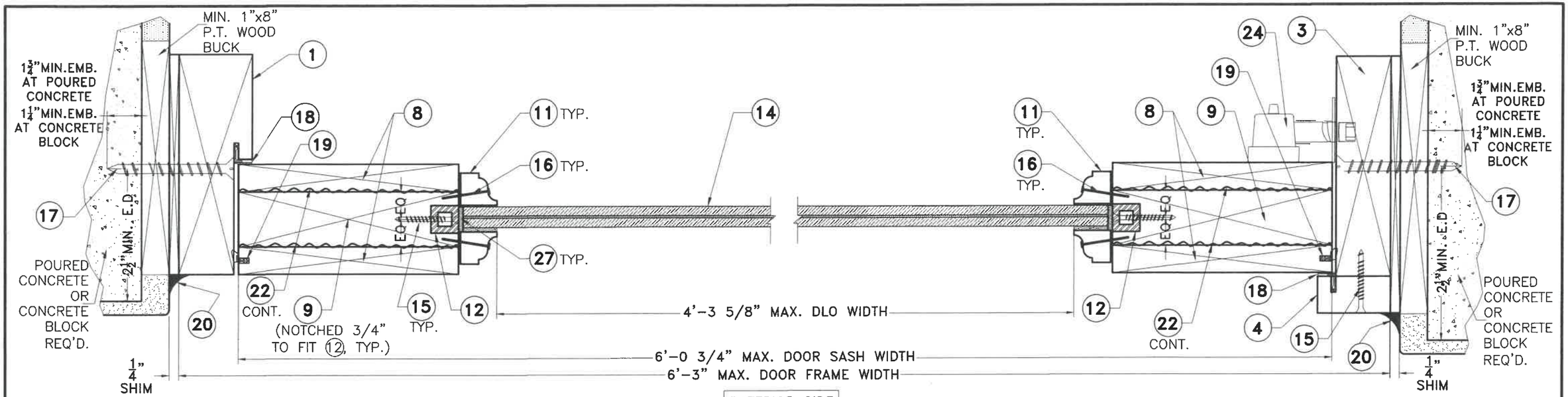

SECTION C'-C'

SCALE 3/8"=1"

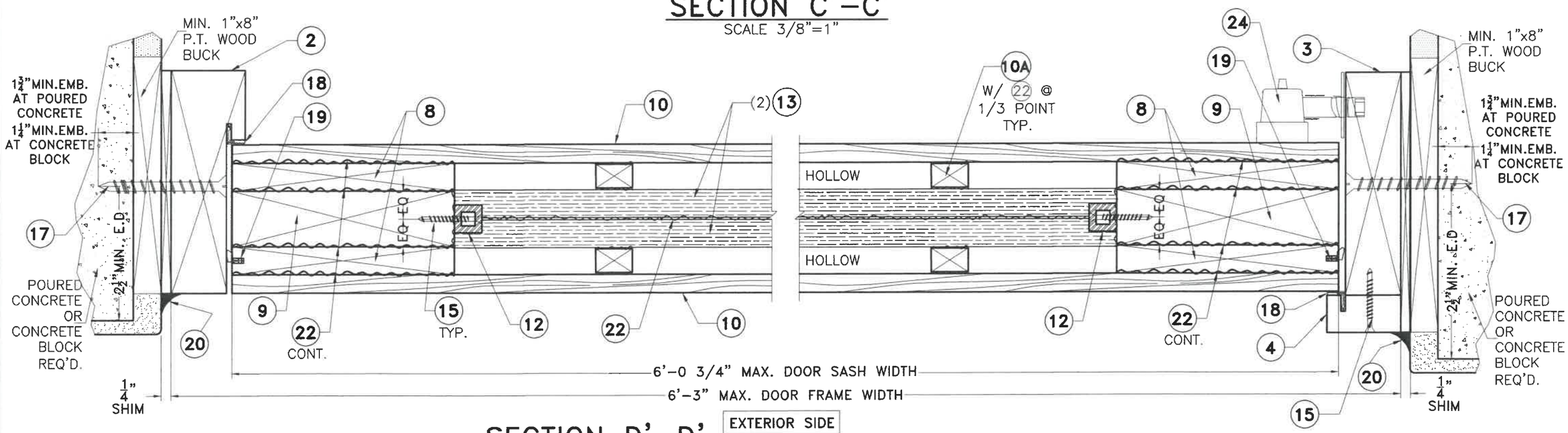

SECTION D'-D'

SCALE 3/8"=1"

FLORIDA BUILDING CODE (HIGH & NON HIGH VELOCITY HURRICANE ZONE)

WALTER A. TILLIT JR. LICENSE No. 44167 STATE OF FLORIDA PROFESSIONAL ENGINEER

SEAL/SIGNATURE/DATE

©2020 TILTECO, INC.

TILTECO INC.
TILLIT TESTING & ENGINEERING COMPANY
6355 N.W. 36th. St., Ste. 305, VIRGINIA GARDENS, FL 33166
Phone : (305)871-1530 . Fax : (305)871-1531
CA-0006719
WALTER A. TILLIT Jr. P.E.
FLORIDA Llc. # 44167

SINGLE PANEL SOLID/GLAZED WOOD PIVOT DOOR (LARGE MISSILE IMPACT RESISTANT)

IMPACT PRECIOUS WOOD, INC.
6333 NW 74 AVE.,
MIAMI, FL 33166
PH: (786) 222-0427, FAX: (305) 428-3011

REV. NO	DESCRIPTION	DATE	REV. No	DESCRIPTION	DATE
1	OLD 17-047	10/12/20	3		
2			4		

M.P.
DRAWN BY:

10/12/2020
DATE:

20-290
DRAWING No.

SHEET 8A OF 10

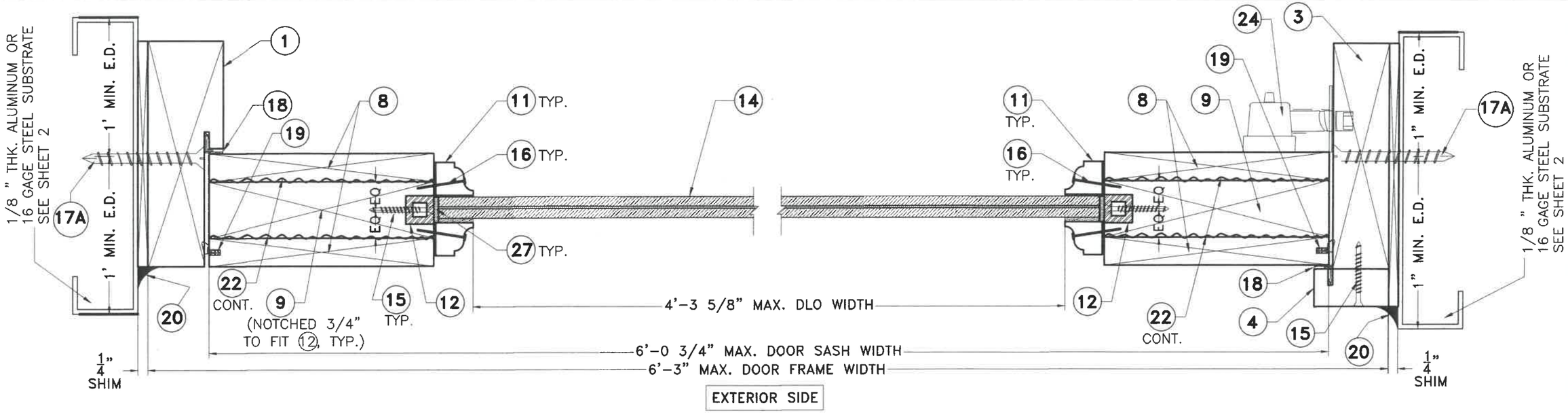

SECTION C"-C"

SCALE 3/8"=1"

SECTION D"-D"

SCALE 3/8"=1"

FLORIDA BUILDING CODE (HIGH & NON HIGH VELOCITY HURRICANE ZONE)

WALTER A. TILLIT JR. LICENSE No. 44167 STATE OF FLORIDA PROFESSIONAL ENGINEER

10/13/2020

SEAL/SIGNATURE/DATE

©2020 TILTECO, INC.

TILTECO INC.
TILLIT TESTING & ENGINEERING COMPANY
6355 N.W. 36th. St., Ste. 305, VIRGINIA GARDENS, FL 33166
Phone : (305)871-1530 . Fax : (305)871-1531
CA-0006719
WALTER A. TILLIT Jr. P.E.
FLORIDA Lic. # 44167

SINGLE PANEL SOLID/GLAZED WOOD PIVOT DOOR (LARGE MISSILE IMPACT RESISTANT)

IMPACT PRECIOUS WOOD, INC.
6333 NW 74 AVE.,
MIAMI, FL 33166
PH: (786) 222-0427, FAX: (305) 428-3011

REV. NO	DESCRIPTION	DATE	REV. No	DESCRIPTION	DATE
1	OLD 17-047	10/12/20	3		
2			4		

M.P.
DRAWN BY:

10/12/2020
DATE:

20-290
DRAWING No.

SHEET 8B OF 10

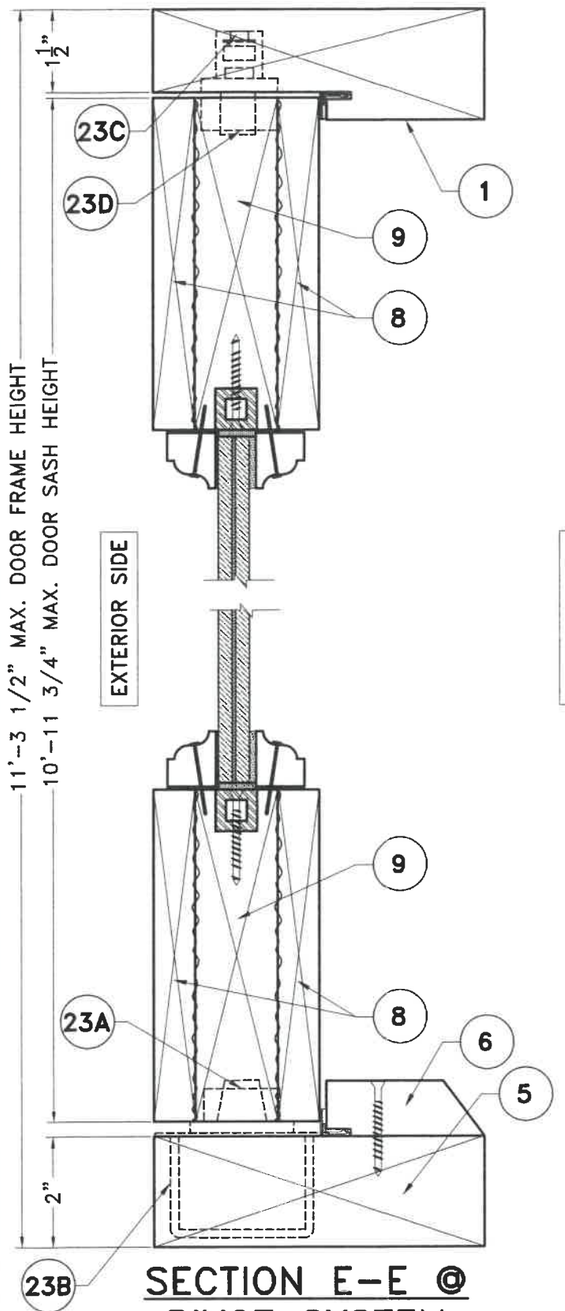

SECTION E-E @ PIVOT SYSTEM (GLASS DOOR)

SCALE 3/8"=1"

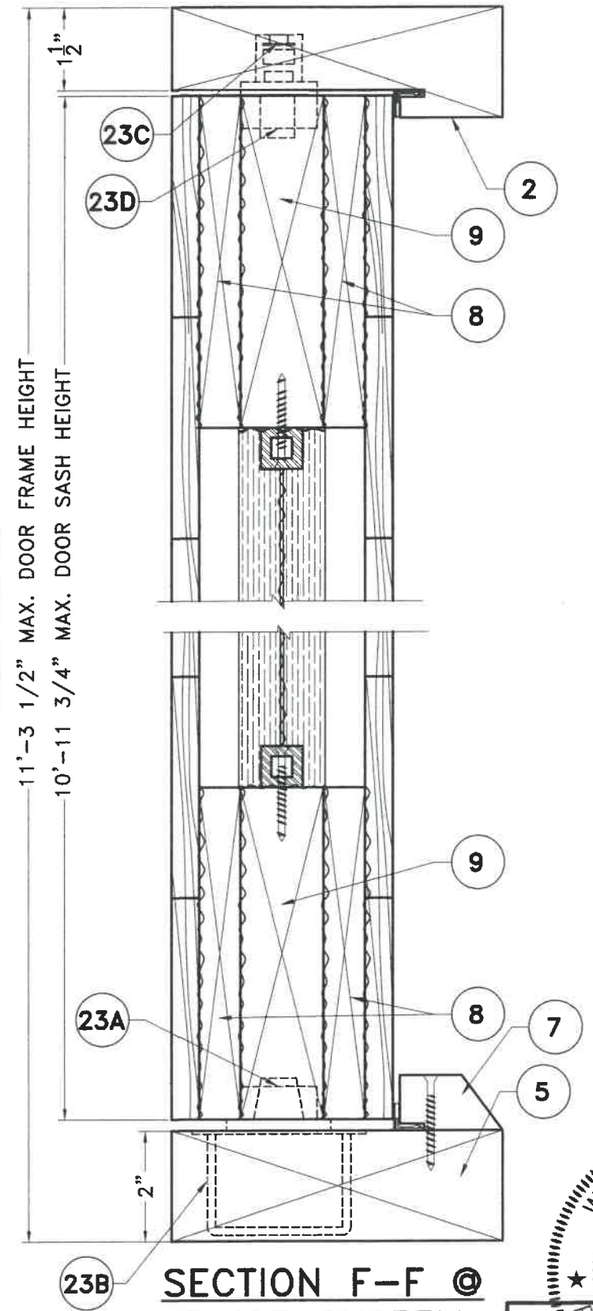

SECTION F-F @ PIVOT SYSTEM (WOOD DOOR)

SCALE 3/8"=1"

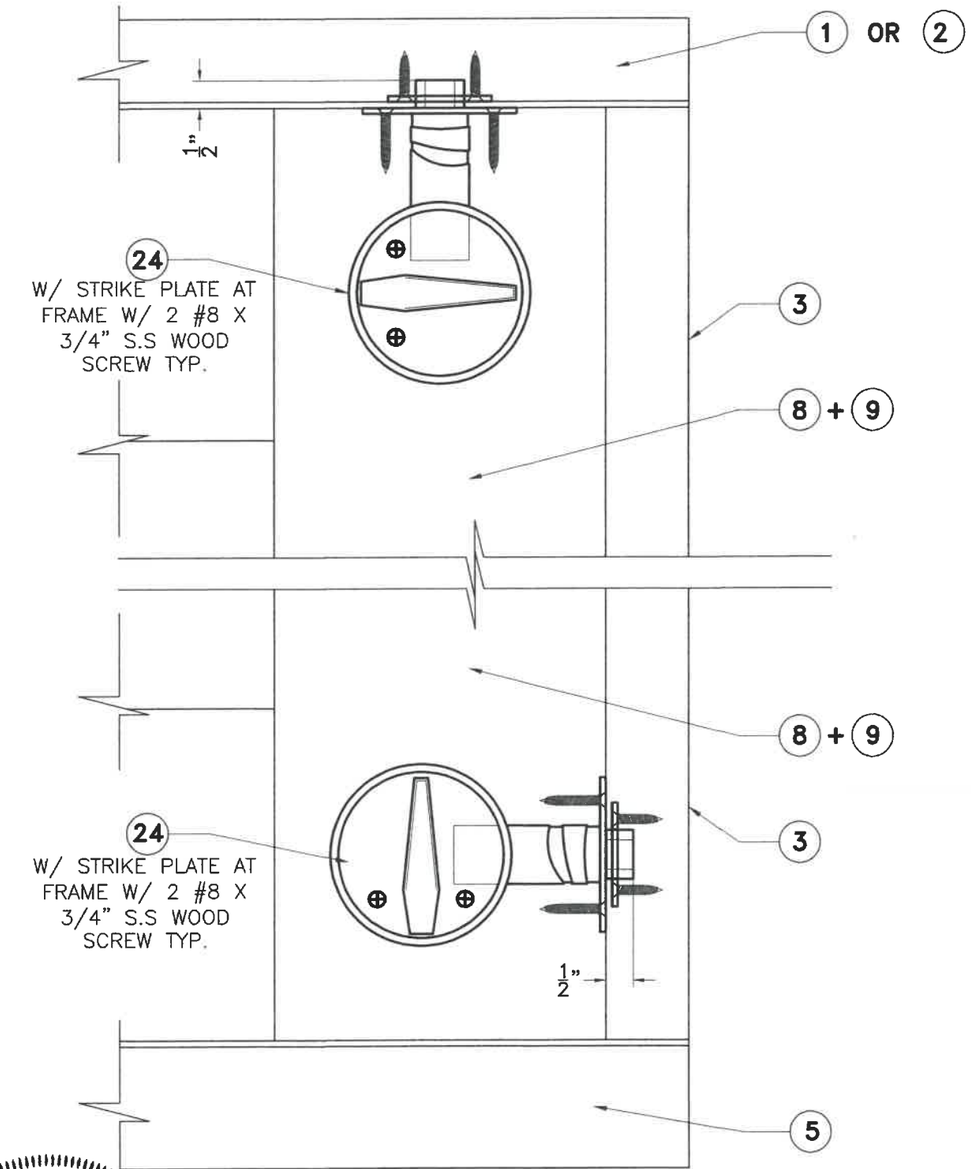

TYPICAL ELEVATION @ SINGLE SIDE DEAD BOLT

FLORIDA BUILDING CODE (HIGH & NON HIGH VELOCITY HURRICANE ZONE)

WALTER A. TILLIT JR. LICENSE No. 44167 STATE OF FLORIDA PROFESSIONAL ENGINEER

10/13/2020

P.E. SEAL/SIGNATURE/DATE

©2020 TILTECO, INC.

TILTECO INC.
TILLIT TESTING & ENGINEERING COMPANY
6355 N.W. 36th. St., Ste. 305, VIRGINIA GARDENS, FL 33166
Phone : (305)871-1530 . Fax : (305)871-1531
CA-0006719
WALTER A. TILLIT Jr. P.E.
FLORIDA Lic. # 44167

SINGLE PANEL SOLID/GLAZED WOOD PIVOT DOOR (LARGE MISSILE IMPACT RESISTANT)

IMPACT PRECIOUS WOOD, INC.
6333 NW 74 AVE.,
MIAMI, FL 33166
PH: (786) 222-0427, FAX: (305) 428-3011

REV. NO	DESCRIPTION	DATE	REV. No	DESCRIPTION	DATE
1	OLD 17-047	10/12/20	3		
2			4		

M.P.
DRAWN BY:

10/12/2020
DATE:

20-290
DRAWING No.

SHEET 9 OF 10

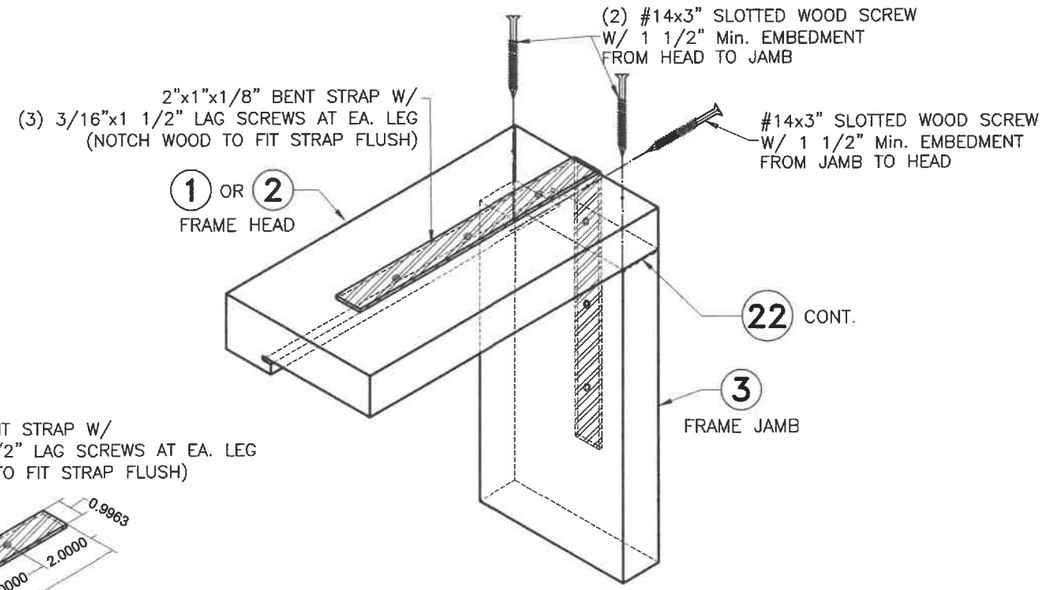

TYPICAL REGULAR FRAME TOP CONNECTION

SCALE: 3/16" = 1"

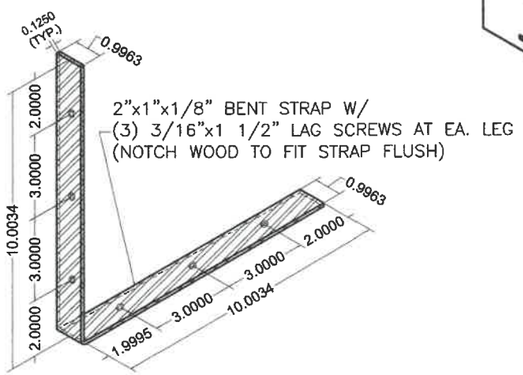

STRAP DETAIL

SCALE: 3/16" = 1"

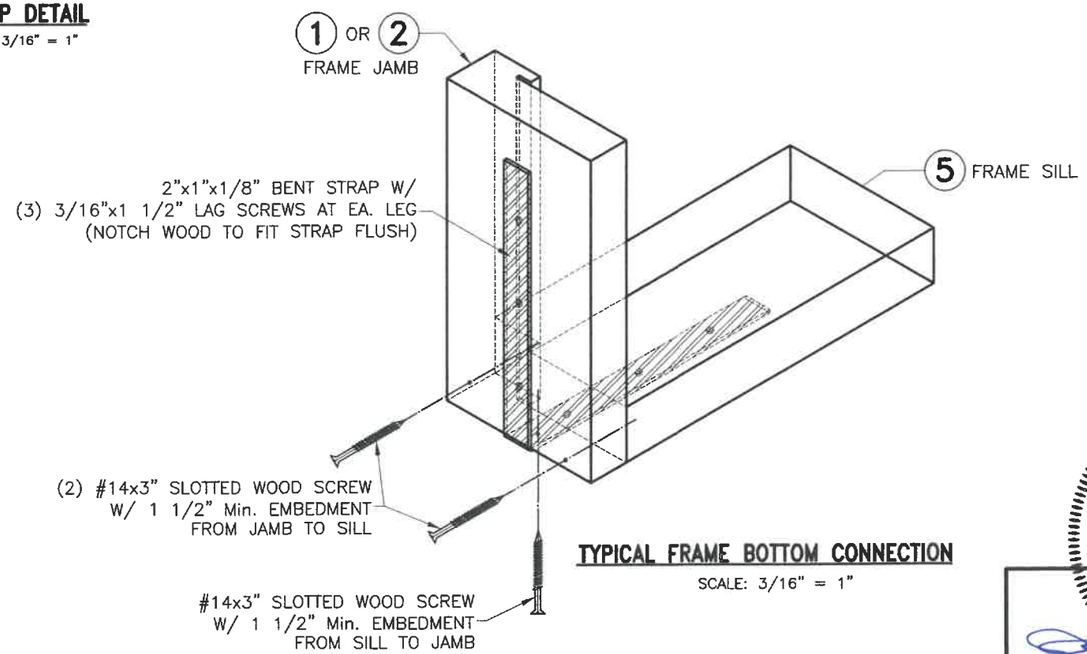

TYPICAL FRAME BOTTOM CONNECTION

SCALE: 3/16" = 1"

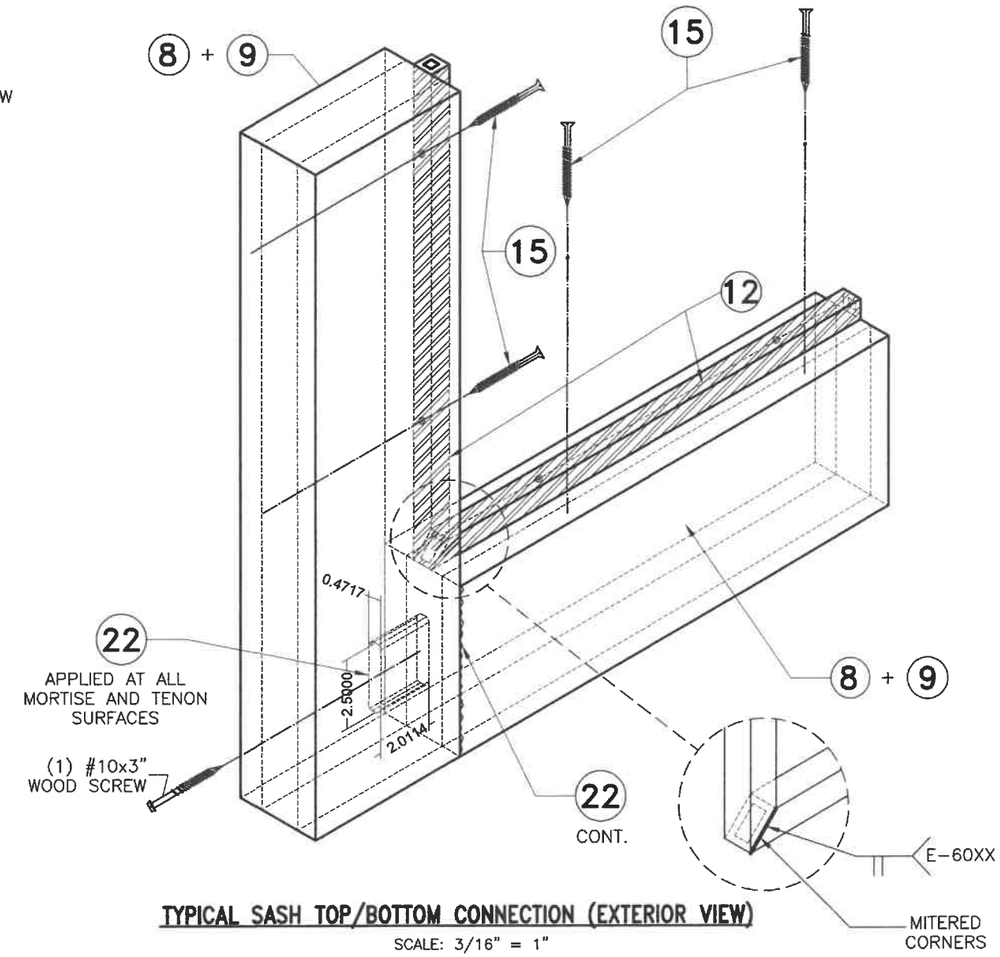

TYPICAL SASH TOP/BOTTOM CONNECTION (EXTERIOR VIEW)

SCALE: 3/16" = 1"

INSTALLATION SEALANT NOTE:

FRAME AND ALL EXPOSED INSTALLATION FASTENERS MUST BE PROPERLY SEALED WITH SEALANT 22 .

WALTER A. TILLIT JR. LICENSE No. 44167 STATE OF FLORIDA PROFESSIONAL ENGINEER

10/13/2020

P.E. SEAL/SIGNATURE/DATE

©2020 TILTECO, INC.

TILTECO INC.
TILLIT TESTING & ENGINEERING COMPANY
6355 N.W. 36th. St., Ste. 305, VIRGINIA GARDENS, FL 33166
Phone : (305)871-1530 , Fax : (305)871-1531
CA-0006719
WALTER A. TILLIT Jr. P.E.
FLORIDA Lic. # 44167

FLORIDA BUILDING CODE (HIGH & NON HIGH VELOCITY HURRICANE ZONE)

SINGLE PANEL SOLID/GLAZED WOOD PIVOT DOOR (LARGE MISSILE IMPACT RESISTANT)

IMPACT PRECIOUS WOOD, INC.
6333 NW 74 AVE.,
MIAMI, FL 33166
PH: (786) 222-0427, FAX: (305) 428-3011

REV. NO	DESCRIPTION	DATE	REV. No	DESCRIPTION	DATE
1	OLD 17-047	10/12/20	3		
2			4		

M.P.
DRAWN BY:

10/12/2020
DATE:

20-290
DRAWING No.

SHEET 10 OF 10