GENERAL NOTES:
(FLORIDA BUILDING CODE 2017 - 6TH EDITION HVHZ & non HVHZ)

1- DEFINITION: THIS PRODUCT IS A ROLLING WIND ABATEMENT SYSTEM; DESIGNED, CONSTRUCTED AND ERECTED TO EASILY ENCLOSE AN AREA, PROVIDING PROTECTION FROM HURRICANE FORCE WINDS AND WIND BORNE DEBRIS WITHIN THE ALLOWABLE DESIGNED PRESSURES AND LIMITATIONS STATED IN THIS APPROVAL.

2- POSTING: A PERMANENT LABEL SHALL BE PROVIDED AS PER FBC. IT SHALL BE LOCATED ON THE BOTTOM OF THE HOOD FACING THE EXTERIOR OR OUTSIDE OR THE BOTTOM SLAT FACING THE EXTERIOR OR OUTSIDE AND A MINIMUM OF ONE LABEL PER OPENING. INFORMATION TO STATE THE FOLLOWING:

"ADVANCED HURRICANE TECHNOLOGIES
NAPLES - FLORIDA
LARGE & SMALL MISSILE IMPACT RESISTANT"

3- LIMITATION: GLAZING SEPARATION (GS) AS PER TABLE 2 AND GLASS SEPARATION NOTES.

4- LOADS: DESIGNED LOAD CALCULATED BASED ON THE ASCE 7-10 AND PROVIDED BY A PROFESSIONAL ARCHITECT OR ENGINEER FOR EACH SPECIFIC PROJECT. THE CALCULATED DESIGNED PRESSURE MUST NOT EXCEED THE ALLOWABLE PRESSURES FOR EACH COMPONENT TO BE USED. THE DESIGN PRESSURES ARE PERMITTED TO BE MULTIPLED BY 0.6

5- MATERIAL: ALL EXTRUDED ALUMINUM SHAPES SHALL BE MADE OF 6063-T6 OR AS NOTED.

6- FASTENERS: ASSEMBLY SCREWS AND ANCHORS SHALL BE AS SPECIFIED IN THE CURRENT SET OF DRAWINGS. INSTALLATION AND LOADS AS PER THIS APPROVAL.

7- USE: IT SHALL BE THE RESPONSIBILITY OF THE CONTRACTOR, ARCHITECT OR ENGINEER OF RECORD TO VERIFY THE FOLLOWING:
7.1- THE STABILITY OF THE STRUCTURE WHERE THE PRODUCT IS TO BE ATTACHED INSURING PROPER ANCHORAGE.
7.2- THE SITE SPECIFIC PROJECT CRITERIA, SUCH AS BUT NOT LIMITED TO, WIND LOADS, LOCAL CODE REQUIREMENTS, DESIGNED PRESSURES ETC.
7.3- THAT THIS APPROVAL IS ADEQUATE TO THE SPECIFIC PROJECT.

DESIGN SCHEDULE

COMPONENT	SHEET
SLAT ALLOWABLE PRESSURE - TABLE 1	1
GLASS SEPARATION - TABLE 2	1
TRACK REACTION - TABLE 3	1
TRACK ANCHORAGE	6 THROUGH 10
MULLION DESIGN	11, 12 & 13

NOTES:
1- ALLOWABLE DESIGNED PRESSURE ARE FUNCTION OF THE LOWEST ALLOWABLE DESIGNED LOAD FOR EACH COMPONENT (SLATS, ANCHORAGE, STORM BARS & MULLIONS)
2- DESIGNED PRESSURES MUST NOT EXCEED 180 PSF.
3- FINISHED WIDTH (FW) MUST NOT EXCEED 294-1/2".

CODE AND STANDARD COMPLIANCE:
FLORIDA BUILDING CODE 2017 - 6TH EDITION
(HVHZ & non HVHZ)
TAS 201, 202, 203 (LARGE & SMALL MISSILE)

PEDRO M. DE FIGUEIREDO
LICENSE
No. 52609
STATE OF FLORIDA
PROFESSIONAL ENGINEER

APR 22 2019

TABLE 1
ALLOWABLE DESIGNED PRESSURE

FW MAXIMUM (IN)	TT MAXIMUM (IN)	DESIGN RATING (PSF)
294 1/2	288	30
282 1/2	276	36
270 1/2	264	43
258 1/2	252	50
246 1/2	240	58
234 1/2	228	66
222 1/2	216	74
210 1/2	204	82
198 1/2	192	91
186 1/2	180	100
174 1/2	168	109
162 1/2	156	118
150 1/2	144	128
138 1/2	132	138
126 1/2	120	148
114 1/2	108	158
102 1/2	96	169
90 1/2	84	180

LINEAR INTERPOLATION BETWEEN ABOVE TABLE VALUES ARE ACCEPTABLE

TABLE 2 - GLASS SEPARATION "GS" (INCHES)

PD (PSF)	TT - TRACK TO TRACK DIMENSION IN INCHES										
	84	96	120	144	168	180	192	216	240	264	288
30	4.0	4.0	4.0	4.7	5.7	6.2	6.9	8.3	9.7	11.1	12.5
35	4.0	4.0	4.0	5.0	6.1	6.6	7.5	9.1	10.7	12.3	13.9
40	4.0	4.0	4.1	5.3	6.5	7.1	8.0	9.7	11.4	13.2	14.9
45	4.0	4.0	4.5	5.8	7.2	7.9	8.8	10.6	12.4	14.2	
50	4.0	4.0	4.8	6.4	7.9	8.7	9.6	11.5	13.4		
60	4.0	4.0	5.3	7.0	8.7	9.5	10.6	12.8	15.0		
70	4.0	4.0	5.7	7.4	9.2	10.1	11.4	14.0			
80	4.0	4.2	6.0	7.8	9.6	10.5	12.0	15.0			
90	4.0	4.6	6.4	8.2	10.0	10.9	12.6				
100	4.0	4.9	6.7	8.5	10.3	11.2					
110	4.3	5.2	7.0	8.9	10.7	11.6					
120	4.6	5.5	7.4	9.2	11.0	12.0					
130	4.9	5.8	7.6	9.5							
140	5.1	6.0	7.9								
150	5.7	6.6	8.3								
160	6.3	7.2									
180	7.3	8.1									

GLASS SEPARATION NOTES (GS):

PRODUCT IS QUALIFIED AS "NON POROUS", THEREFORE GLAZING SEPARATION IS NOT REQUIRED WITH EXCEPTION FOR THE FOLLOWING LOCATIONS:
1- HIGH VELOCITY HURRICANE ZONES (HVHZ MIAMI-DADE & BROWARD COUNTIES)
2- WIND ZONE 4 AS DEFINED IN ASTM E 1996
3- ESSENTIAL FACILITIES AS DEFINED IN ASCE 7

TABLE 3 - TRACK REACTIONS (LB/FT)

PD (PSF)	TT - TRACK TO TRACK DIMENSION IN INCHES																					
	84		96		120		144		168		180		192		216		240		264		288	
	Vx	Vy	Vx	Vy	Vx	Vy	Vx	Vy	Vx	Vy	Vx	Vy	Vx	Vy	Vx	Vy	Vx	Vy	Vx	Vy	Vx	Vy
30	-	105	-	120	-	150	-	180	-	210	-	225	-	240	445	270	890	300	1202	330	1397	360
35	-	123	-	140	-	175	-	210	-	245	-	263	220	280	706	315	1109	350	1395	385	1576	420
40	-	140	-	160	-	200	-	240	-	280	142	300	482	320	936	360	1318	400	1594	440	1774	480
45	-	158	-	180	-	225	-	270	295	315	372	338	677	360	1100	405	1467	450	1740	495		
50	-	175	-	200	-	250	50	300	618	350	553	375	834	400	1235	450	1592	500				
60	-	210	-	240	-	300	410	360	1103	420	898	450	1150	480	1511	540	1836	600				
70	-	245	-	280	-	350	719	420	1450	490	1216	525	1438	560	1755	630						
80	-	280	-	320	177	400	1003	480	1709	560	1526	600	1713	640	1977	720						
90	-	315	-	360	446	450	1251	540	1912	630	1807	675	1954	720								
100	-	350	-	400	683	500	1485	600	2073	700	2084	750										
110	-	385	-	440	896	550	1693	660	2205	770	2325	825										
120	-	420	174	480	1088	600	1887	720	2316	840	2554	900										
130	-	455	367	520	1271	650	2078	780														
140	67	490	540	560	1439	700																
150	216	525	661	600	1560	750																
160	332	560	755	640																		
180	514	630	926	720																		

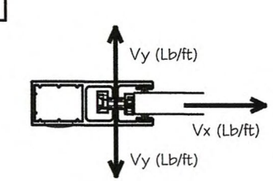

CONTRACTOR TO VERIFY ADEQUACY OF STRUCTURE FOR MAXIMUM IMPOSED LOADS VY AND Vx

ENGINEER SEAL
PEDRO DE FIGUEIREDO
PE 52609

PPMF Inc.
ENGINEERING SERVICES - CA 32459
9715 W. BROWARD BLVD.
PLANTATION, FL 33324
PPMF@AOL.COM

PRODUCT NAME:
WIND ABATEMENT SYSTEM - LARGE MISSILE
55 MM ROLLING DOOR SYSTEM

MANUFACTURER:
ADVANCED HURRICANE TECHNOLOGIES
6063 JANES LANE
NAPLES, FLORIDA 34109
TEL: (239) 260-0020

AHT

SCALE: NA
DATE: 04/11/19
DRAWING # 19-004
SHEET 1 OF 14

TYPICAL ELEVATIONS

TYPICAL SINGLE UNIT ELEVATION

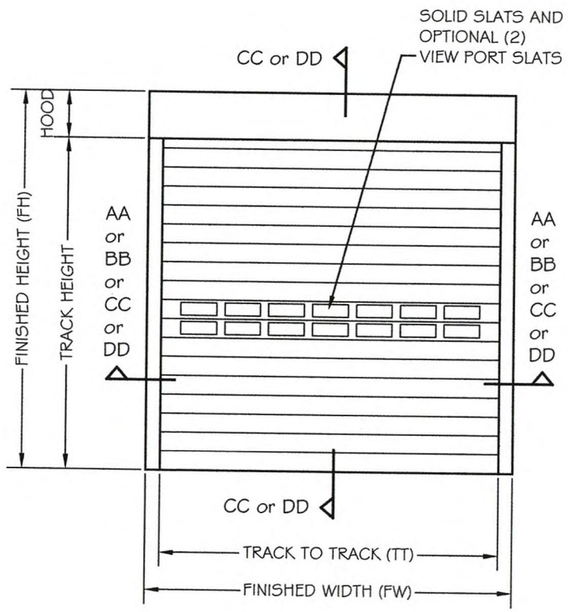

TYPICAL MULTIPLE UNITS ELEVATION

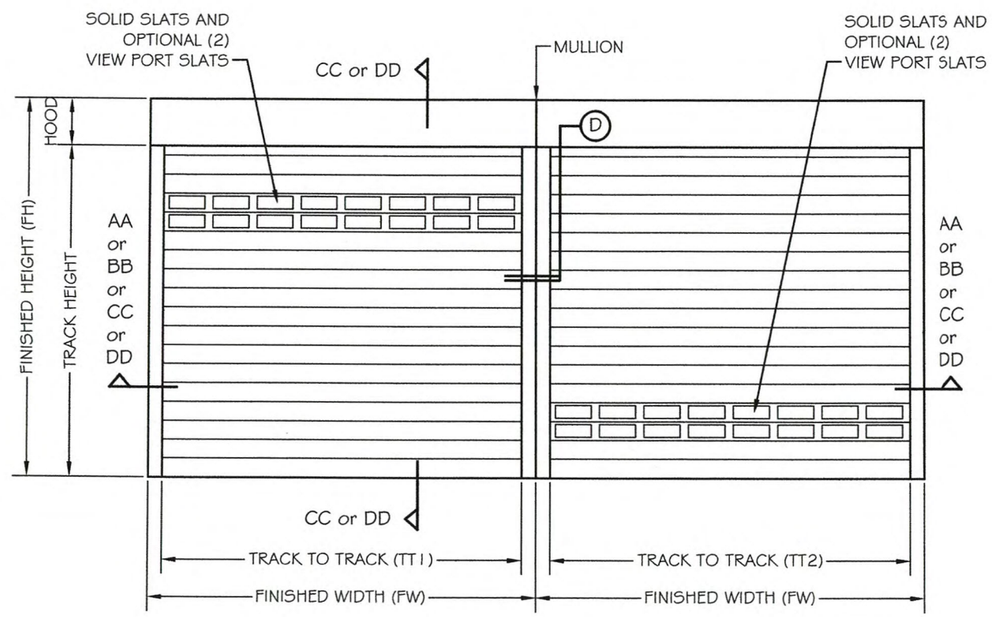

TT1 = TT2

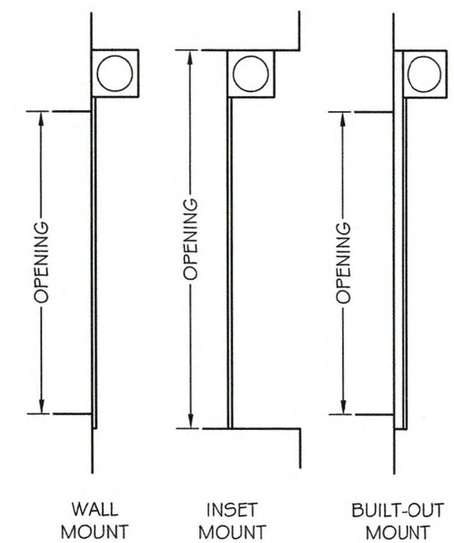

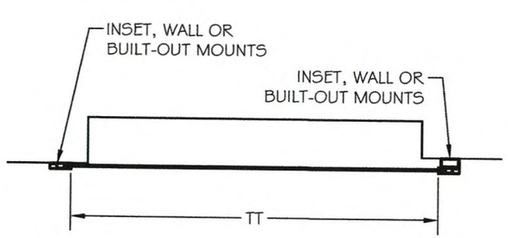

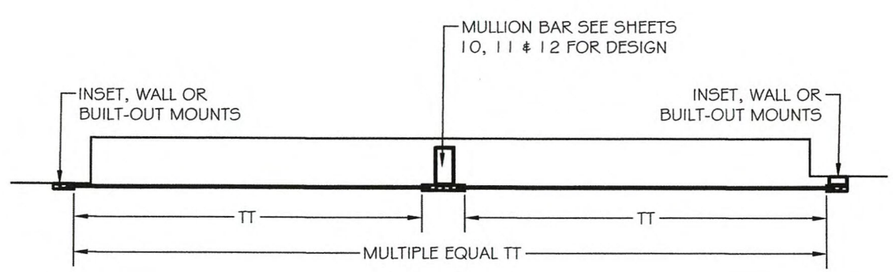

PEDRO M. DE FIGUEIREDO
LICENSE
No. 52609
STATE OF
FLORIDA
PROFESSIONAL ENGINEER

APR 22 2019

ENGINEER SEAL
PEDRO DE FIGUEIREDO
PE 52609

PPMF Inc.
ENGINEERING SERVICES - CA 32459
9715 W. BROWARD BLVD.
PLANTATION, FL 33324
PPMF@AOL.COM

PRODUCT NAME:
WIND ABATEMENT
SYSTEM - LARGE MISSILE
55 MM ROLLING DOOR SYSTEM

MANUFACTURER:
ADVANCED HURRICANE
TECHNOLOGIES
6063 JANES LANE
NAPLES, FLORIDA 34109
TEL: (239) 260-0020

AHT

SCALE:
NA

DATE:
04/11/19

DRAWING #
19-004

SHEET
2 OF 14

PRODUCT COMPONENTS

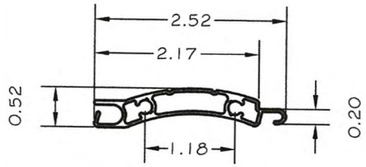

A- 55mm SLAT
EXTRUDED ALUMINUM 6060-T6

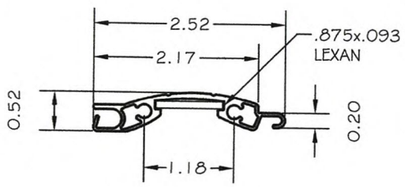

A1- 55mm W/LEXAN INSERT
EXTRUDED ALUMINUM 6060-T6

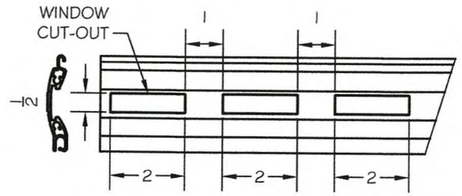

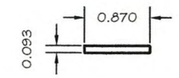

A2- POLYCARBONATE VIEWPORT WINDOW
10" MINIMUM 48" MAXIMUM

NOTES:

TENSILE YIELD STRENGTH	ASTM D638	9,500 PSI
FLEXURAL STRENGTH AT YIELD	ASTM D790	13,400 PSI
FLEXURAL MODULUS	ASTM D790	345,000 PSI
NOTCHED IZOD	ASTM D256	17 FT-LB/IN
SMOKE DENSITY	ASTM D2843	64.5% MAX
RATE OF BURNING	ASTM D635	C-1 CLASS
SELF IGNITION	ASTM D1929	980° F
TENSILE STRENGTH AFTER WEATHERING	ASTM D638	8,840 PSI
TENSILE STRENGTH BEFORE WEATHERING	ASTM D638	8,880 PSI
SPECIFIC GRAVITY	ASTM D792	0.043 LB/IN®

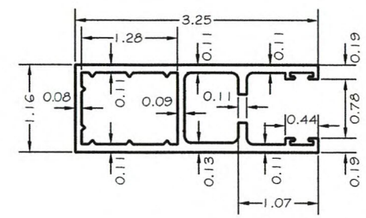

C- ROLLING WALL GUIDE RAIL
6063-T6 EXTRUDED ALUMINUM

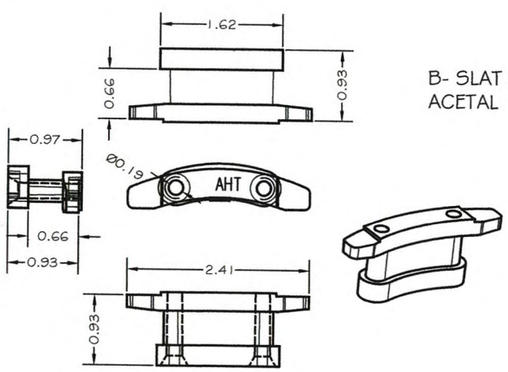

B- SLAT END LOCK
ACETAL

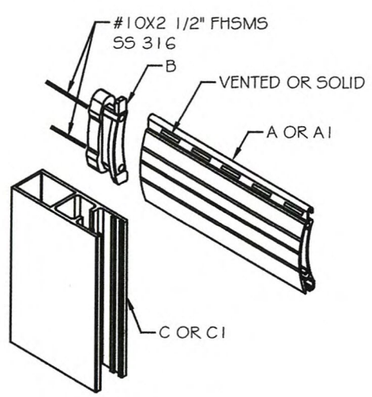

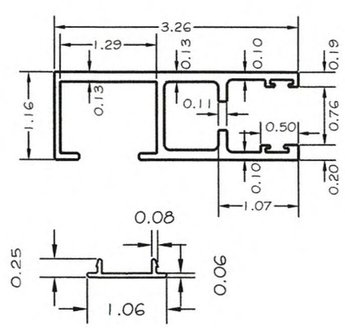

C1- ROLLING WALL GUIDE RAIL
WITH SNAP COVER
6063-T6 EXTRUDED ALUMINUM

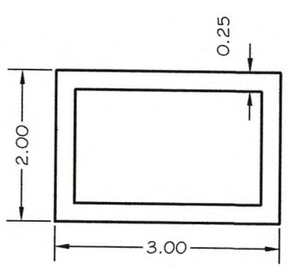

F- TUBE
EXTRUDED ALUMINUM
6063-T6

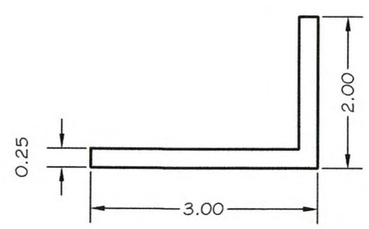

E- INSET SUPPORT ANGLE
EXTRUDED ALUMINUM
6063-T6

PEDRO M. DE FIGUEIREDO
LICENSE
No. 52609
STATE OF
FLORIDA
PROFESSIONAL ENGINEER

APR 22 2019

ENGINEER SEAL
PEDRO DE FIGUEIREDO
PE 52609

PPMF Inc.
ENGINEERING SERVICES - CA 32459
9715 W. BROWARD BLVD.
PLANTATION, FL 33324
PPMF@AOL.COM

PRODUCT NAME:
WIND ABATEMENT SYSTEM - LARGE MISSILE
55 MM ROLLING DOOR SYSTEM

MANUFACTURER:
ADVANCED HURRICANE TECHNOLOGIES
6063 JANES LANE
NAPLES, FLORIDA 34109
TEL: (239) 260-0020

AHT

SCALE: NA
DATE: 04/11/19
DRAWING # 19-004
SHEET 3 OF 14

SLAT END RETENTION LAY-OUT

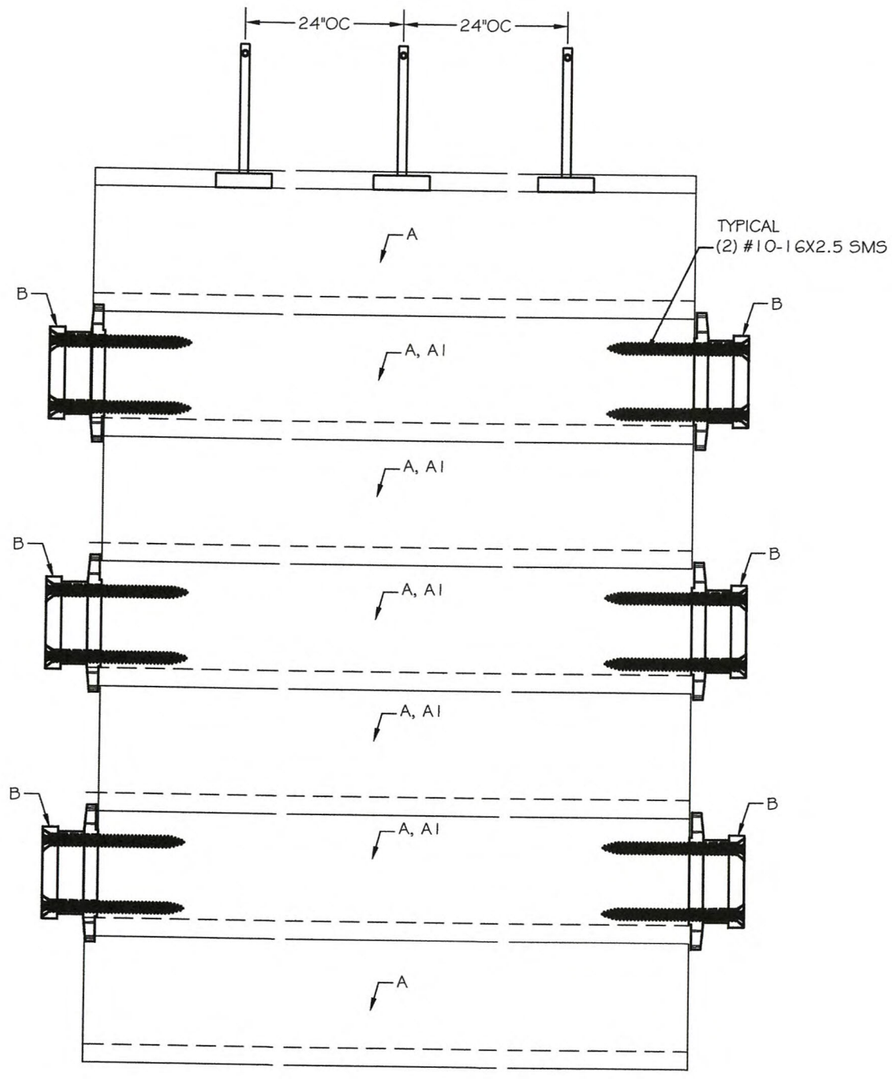

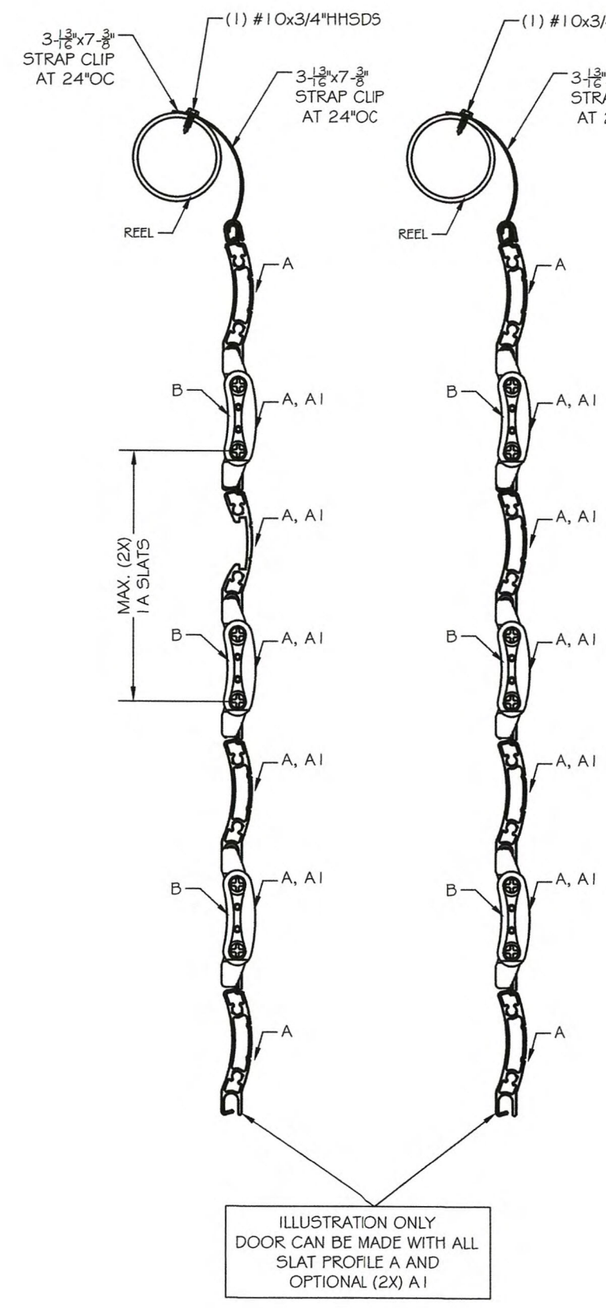

ILLUSTRATION ONLY
DOOR CAN BE MADE WITH ALL
SLAT PROFILE A AND
OPTIONAL (2X) A1

PEDRO M. DE FIGUEIREDO
LICENSE
No. 52609
STATE OF FLORIDA
PROFESSIONAL ENGINEER

APR 22 2019

ENGINEER SEAL
PEDRO DE FIGUEIREDO
PE 52609

PPMF Inc.
ENGINEERING SERVICES - CA 32459
9715 W. BROWARD BLVD.
PLANTATION, FL 33324
PPMF@AOL.COM

PRODUCT NAME:
WIND ABATEMENT SYSTEM
55 MM ROLLING DOOR SYSTEM

MANUFACTURER:
ADVANCED HURRICANE TECHNOLOGIES
6063 JANES LANE
NAPLES, FLORIDA 34109
TEL: (239) 260-0020

AHT

SCALE:	NA
DATE:	04/11/19
DRAWING #	19-004
SHEET	4 OF 14

TYPICAL VERTICAL SECTIONS

SECTION DD
HEADER CEILING SECTION

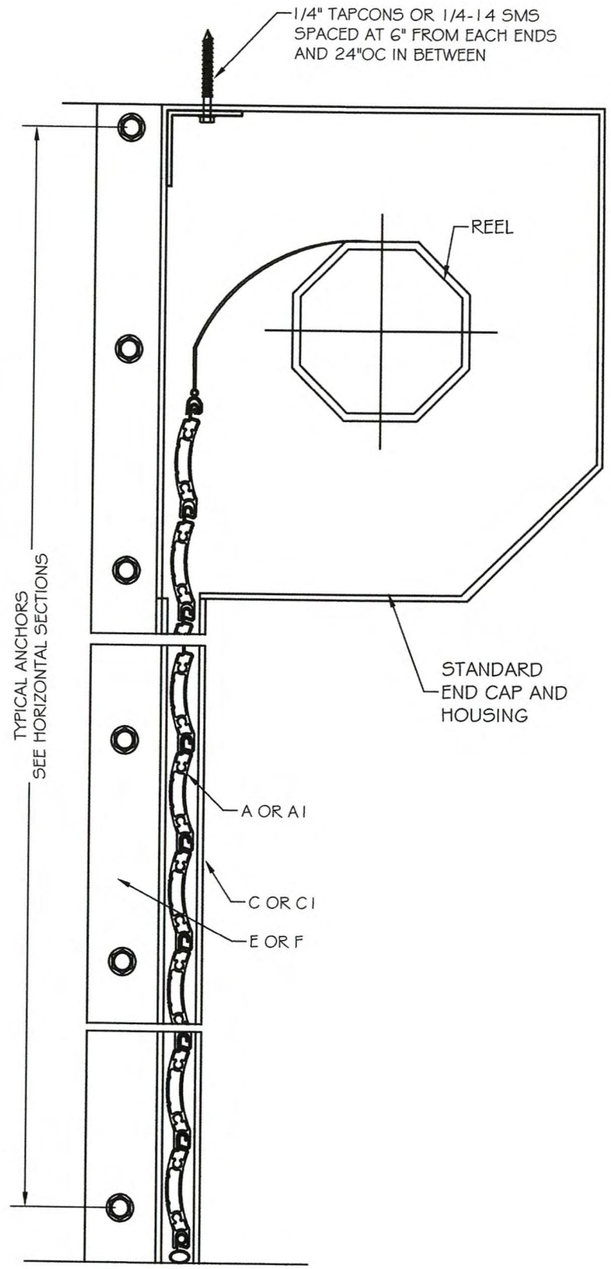

SECTION CC
SILL FLOOR SECTION

SECTION DD
HEADER WALL SECTION

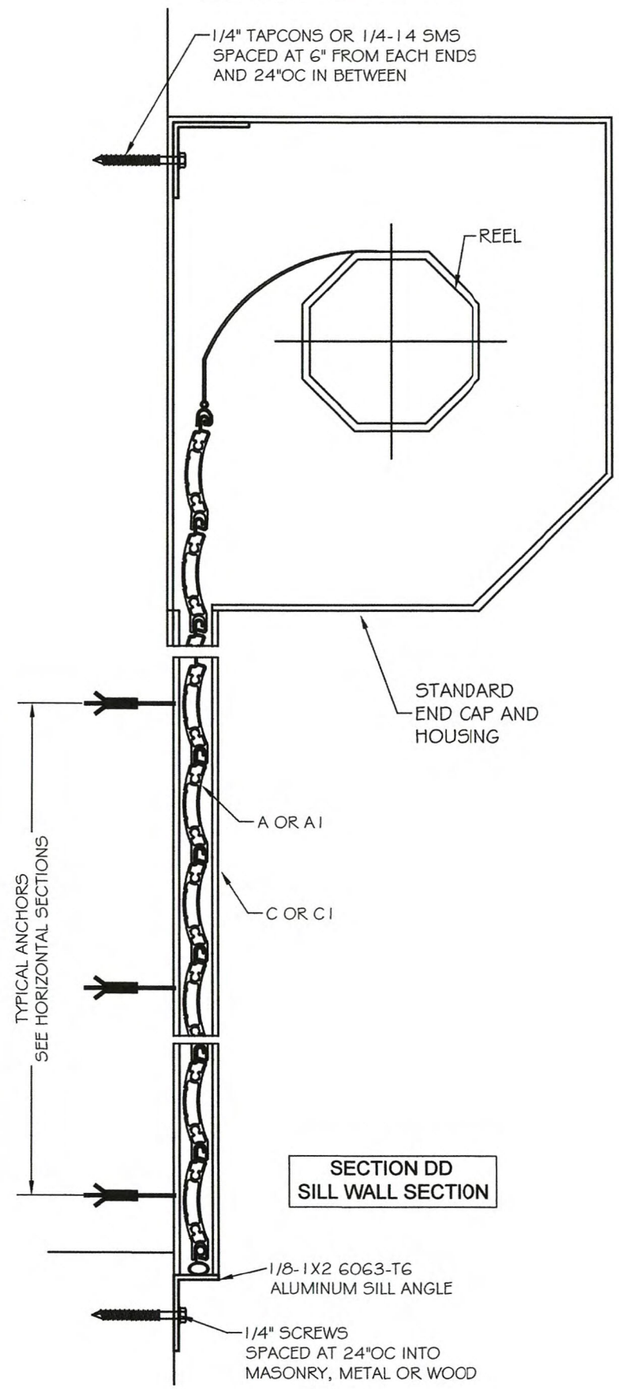

SECTION DD
SILL WALL SECTION

PEDRO M. DE FIGUEIREDO
LICENSE
No. 52609
STATE OF
FLORIDA
PROFESSIONAL ENGINEER

APR 22 2019

ENGINEER SEAL
PEDRO DE FIGUEIREDO
PE 52609

PPMF Inc.
ENGINEERING SERVICES - CA 32459
9715 W. BROWARD BLVD.
PLANTATION, FL 33324
PPMF@AOL.COM

PRODUCT NAME:
WIND ABATEMENT SYSTEM - LARGE MISSILE
55 MM ROLLING DOOR SYSTEM

MANUFACTURER:
ADVANCED HURRICANE TECHNOLOGIES
6063 JANES LANE
NAPLES, FLORIDA 34109
TEL: (239) 260-0020

AHT

SCALE: NA
DATE: 04/11/19
DRAWING # 19-004
SHEET 5 OF 14

WALL MOUNT

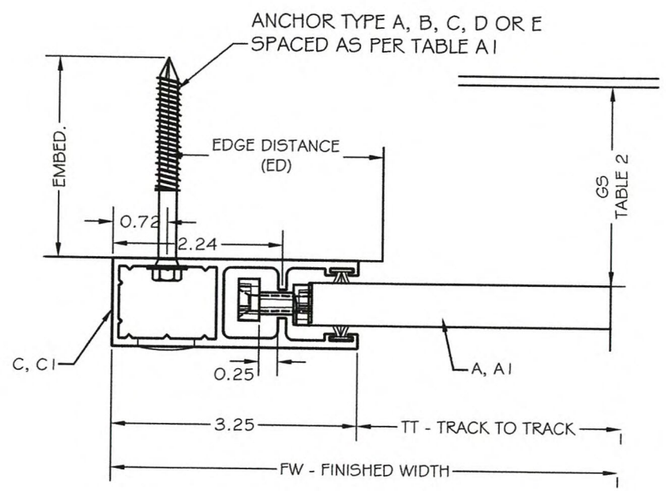

ANCHOR SCHEDULE:

ANCHOR	DESCRIPTION	MATERIAL	EMBEDMENT	EDGE DISTANCE
A	5/16" ITW TAPCONS XL	MIN. 3000 PSI CONCRETE	2 1/4"	2 3/16"
B	5/16" ITW TAPCONS XL	GROUT FILLED C-90 BLOCK	2 1/4"	4"
C	1/4"-14X1" GRADE 5 SELF DRILLING SCREWS	MIN. 1/4" 6063-T6 ALUM. OR A36 3/16" STEEL	3 TREADS 3 TREADS	1/2" 3/8"
D	5/16" ITW TAPCONS XL	WOOD WITH G>=.55	2 1/4"	1-1/4"
E	3/8" POWERS WEDGE BOLT	MIN. 3000 PSI CONCRETE	3 1/2"	4-1/2"

TABLE A1 - SPACING ON CENTER FOR WALL MOUNT INSTALLATION

LOAD (PSF)	TT = 84					TT = 96					TT = 120					TT = 144					TT = 168					TT = 180					TT = 192					TT = 216					TT = 240					TT = 264					TT = 288				
	A	B	C	D	E	A	B	C	D	E	A	B	C	D	E	A	B	C	D	E	A	B	C	D	E	A	B	C	D	E	A	B	C	D	E	A	B	C	D	E	A	B	C	D	E	A	B	C	D	E	A	B	C	D	E	A	B	C	D	E
30	8	8	8	8	8	8	8	8	8	8	8	8	8	8	8	8	8	8	8	8	8	8	8	8	8	8	8	8	8	8	8	8	8	8	8	7	7	8	6	8	5	5	5	4	8	4		4		8	4		4		7
35	8	8	8	8	8	8	8	8	8	8	8	8	8	8	8	8	8	8	8	8	8	8	8	8	8	8	8	8	8	8	8	8	8	8	8	6	5	6	4	8	4		4		8			3		7			3		6
40	8	8	8	8	8	8	8	8	8	8	8	8	8	8	8	8	8	8	8	8	8	8	8	8	8	8	8	8	8	8	6	6	7	5	8	5	4	5	3	8			4		7			3		6					6
45	8	8	8	8	8	8	8	8	8	8	8	8	8	8	8	8	8	8	8	8	7	7	8	7	8	7	6	7	6	8	5	5	5	4	8	4		4		8			3		7					6								
50	8	8	8	8	8	8	8	8	8	8	8	8	8	8	8	8	8	8	8	8	6	5	6	4	8	6	5	6	4	8	5	4	5	3	8			4		7					6													
60	8	8	8	8	8	8	8	8	8	8	8	8	8	8	8	6	6	7	5	8	4		4		8	4		4	3	8			4		8					6					5													
70	8	8	8	8	8	8	8	8	8	8	8	8	8	8	8	5	4	5	4	8			3		6			3		7					6					5																			
80	8	8	8	8	8	8	8	8	8	8	7	6	8	7	8	4		4		8					6					6					5					5																			
90	8	8	8	8	8	8	8	8	8	8	5	5	6	4	8			3		7					5					5					5																								
100	8	8	8	8	8	8	7	8	8	8	4	4	5	3	8					6					5																																		
110	8	8	8	8	8	7	7	8	8	8			4		8					5																																						
120	7	7	8	8	8	6	5	7	6	8			3		7					5																																						
130	7	6	8	8	8	5	4	5	4	8					6																																										
140	6	6	7	7	8	4	4	5	4	8					6																																										
150	5	5	6	5	8			4	3	8					5																																										
160	5	4	5	4	8			4		8																																															
180	4		4	3	8			3		7																																															

APR 2 2 2019

PEDRO M. DE FIGUEIREDO
LICENSE
No. 52609
STATE OF
FLORIDA
PROFESSIONAL ENGINEER

ENGINEER SEAL
PEDRO DE FIGUEIREDO
PE 52609

PPMF Inc.
ENGINEERING SERVICES - CA 32459
9715 W. BROWARD BLVD.
PLANTATION, FL 33324
PPMF@AOL.COM

PRODUCT NAME:
WIND ABATEMENT
SYSTEM - LARGE MISSILE
55 MM ROLLING DOOR SYSTEM

MANUFACTURER:
ADVANCED HURRICANE
TECHNOLOGIES
6063 JANES LANE
NAPLES, FLORIDA 34109
TEL: (239) 260-0020

AHT

SCALE:
NA

DATE:
04/11/19

DRAWING #
19-004

SHEET
6 OF 14

INSET MOUNTED W/ SINGLE ANGLE / TUBE

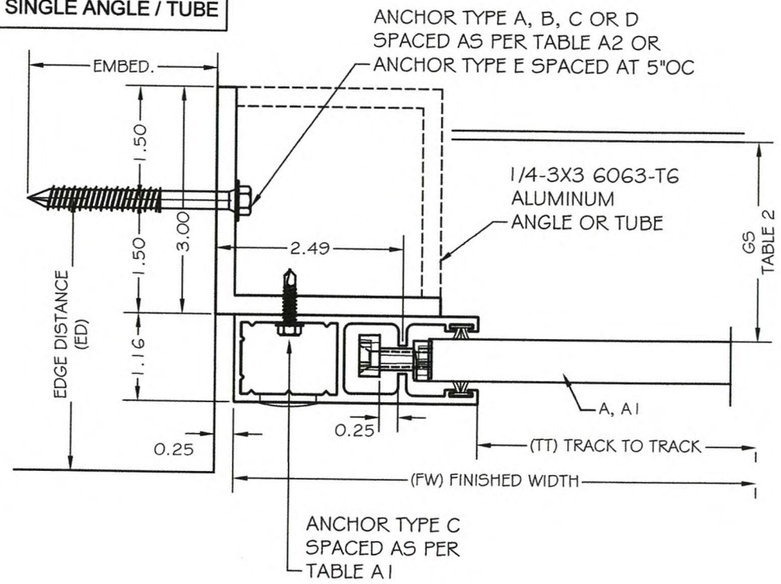

ANCHOR SCHEDULE:

ANCHOR	DESCRIPTION	MATERIAL	EMBEDMENT	EDGE DISTANCE
A	5/16" ITW TAPCONS XL	MIN. 3000 PSI CONCRETE	2 1/4"	2 3/16"
B	5/16" ITW TAPCONS XL	GROUT FILLED C-90 BLOCK	2 1/4"	4"
C	1/4"-14X1" GRADE 5 SELF DRILLING SCREWS	MIN. 1/4" 6063-T6 ALUM. OR A36 3/16" STEEL	3 TREADS 3 TREADS	1/2" 3/8"
D	5/16" ITW TAPCONS XL	WOOD WITH G>=.55	2 1/4"	1-1/4"
E	3/8" POWERS WEDGE BOLT	MIN. 3000 PSI CONCRETE	3 1/2"	4-1/2"

TABLE A2 - SPACING ON CENTER FOR INSET MOUNT INSTALLATION W/ SINGLE ANGLE / TUBE

LOAD (PSF)	TT = 84					TT = 96					TT = 120					TT = 144					TT = 168					TT = 180					TT = 192					TT = 216					TT = 240					TT = 264					TT = 288				
	A	B	C	D	E	A	B	C	D	E	A	B	C	D	E	A	B	C	D	E	A	B	C	D	E	A	B	C	D	E	A	B	C	D	E	A	B	C	D	E	A	B	C	D	E	A	B	C	D	E	A	B	C	D	E	A	B	C	D	E
30	8	8	8	8	8	8	8	8	8	8	8	8	8	8	8	8	8	8	8	8	8	8	8	8	8	8	8	8	8	8	8	8	8	8	8	5	5	6	5	8			4	3	8			3		7					6
35	8	8	8	8	8	8	8	8	8	8	8	8	8	8	8	8	8	8	8	8	8	8	8	8	8	8	8	8	8	8	7	7	8	7	8			4	4	8			3		7					6					5
40	8	8	8	8	8	8	8	8	8	8	8	8	8	8	8	8	8	8	8	8	8	8	8	8	8	8	8	8	7	8	5	4	5	4	8			4		8					6					5					5
45	8	8	8	8	8	8	8	8	8	8	8	8	8	8	8	8	8	8	8	8	6	6	7	6	8	5	5	6	5	8			4	4	8			3		7					5					5								
50	8	8	8	8	8	8	8	8	8	8	8	8	8	8	8	8	8	8	8	8	4		5	4	8	4	4	5	4	8			4	3	8					6					5												
60	8	8	8	8	8	8	8	8	8	8	8	8	8	8	8	5	5	6	5	8					7			3		7					6					5																	
70	8	8	8	8	8	8	8	8	8	8	8	8	8	8	8			4	3	8					5					6					5																						
80	8	8	8	8	8	8	8	8	8	8	6	6	7	5	8			3		7										5																											
90	8	8	8	8	8	8	8	8	8	8	4	4	5	4	8					5																																					
100	8	8	8	8	8	8	8	8	7	8			4	3	8					5																																					
110	8	8	8	7	8	8	7	8	6	8			3		7																																									
120	8	8	8	6	8	6	5	6	5	8					6																																									
130	8	7	8	6	8	4	4	5	4	8					5																																									
140	6	6	7	5	8			4	3	8					5																																									
150	5	4	5	4	8			3		7																																														
160	4	4	5	4	8			3		7																																														
180			4		8					6																																														

PEDRO M. DE FIGUEIREDO
LICENSE
No. 52609
STATE OF FLORIDA
PROFESSIONAL ENGINEER

APR 22 2019

ENGINEER SEAL
PEDRO DE FIGUEIREDO
PE 52609

PPMF Inc.
ENGINEERING SERVICES - CA 32459
9715 W. BROWARD BLVD.
PLANTATION, FL 33324
PPMF@AOL.COM

PRODUCT NAME:
WIND ABATEMENT SYSTEM - LARGE MISSILE
55 MM ROLLING DOOR SYSTEM

MANUFACTURER:
ADVANCED HURRICANE TECHNOLOGIES
6063 JANES LANE
NAPLES, FLORIDA 34109
TEL: (239) 260-0020

AHT

SCALE: NA

DATE: 04/11/19

DRAWING # 19-004

SHEET 7 OF 14

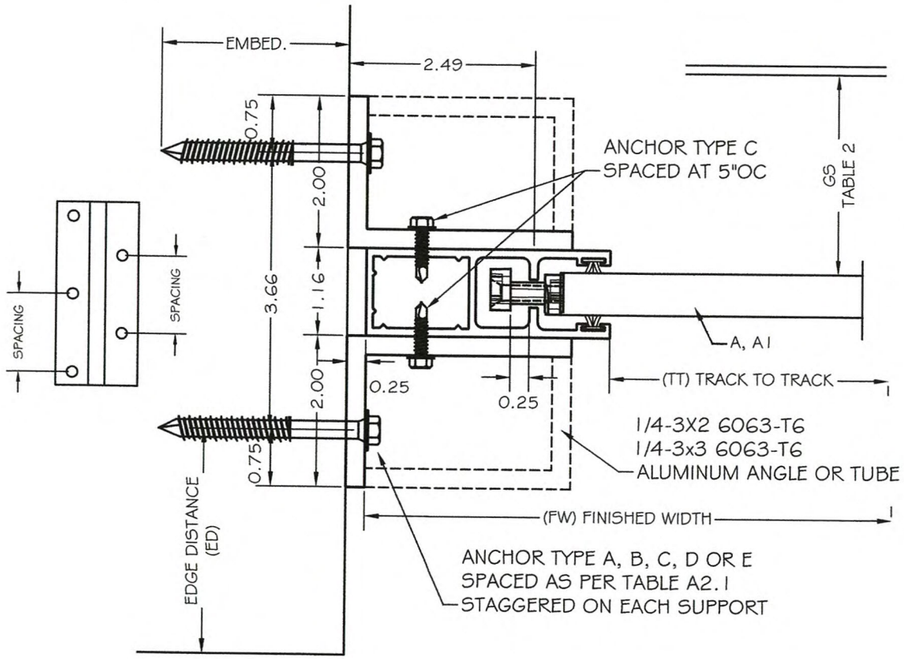

INSET MOUNT
W/ DOUBLE ANGLE / TUBE

PEDRO M. DE FIGUEIREDO
LICENSE
No. 52609
STATE OF
FLORIDA
PROFESSIONAL ENGINEER

APR 22 2019

ANCHOR SCHEDULE:

ANCHOR	DESCRIPTION	MATERIAL	EMBEDMENT	EDGE DISTANCE
A	5/16" ITW TAPCONS XL	MIN. 3000 PSI CONCRETE	2 1/4"	2 3/16"
B	5/16" ITW TAPCONS XL	GROUT FILLED C-90 BLOCK	2 1/4"	4"
C	1/4"-14X1" GRADE 5 SELF DRILLING SCREWS	MIN. 1/4" 6063-T6 ALUM. OR A36 3/16" STEEL	3 TREADS 3 TREADS	1/2" 3/8"
D	5/16" ITW TAPCONS XL	WOOD WITH G>=.55	2 1/4"	1-1/4"
E	3/8" POWERS WEDGE BOLT	MIN. 3000 PSI CONCRETE	3 1/2"	4-1/2"

TABLE A2.1 - SPACING ON CENTER FOR INSET MOUNT INSTALLATION W/ DOUBLE ANGLE / TUBE

LOAD (PSF)	TT = 84					TT = 96					TT = 120					TT = 144					TT = 168					TT = 180					TT = 192					TT = 216					TT = 240					TT = 264					TT = 288				
	A	B	C	D	E	A	B	C	D	E	A	B	C	D	E	A	B	C	D	E	A	B	C	D	E	A	B	C	D	E	A	B	C	D	E	A	B	C	D	E	A	B	C	D	E	A	B	C	D	E	A	B	C	D	E
30	8	8	8	8	8	8	8	8	8	8	8	8	8	8	8	8	8	8	8	8	8	8	8	8	8	8	8	8	8	8	8	8	8	8	8	8	8	8	8	8	8	8	8	8	8	8	8	8	8	8	8	8	8	8	8
35	8	8	8	8	8	8	8	8	8	8	8	8	8	8	8	8	8	8	8	8	8	8	8	8	8	8	8	8	8	8	8	8	8	8	8	8	8	8	8	8	8	8	8	8	8	8	8	8	8	8	8	8	7	7	8	7	8
40	8	8	8	8	8	8	8	8	8	8	8	8	8	8	8	8	8	8	8	8	8	8	8	8	8	8	8	8	8	8	8	8	8	8	8	8	8	8	8	8	8	8	8	8	8	8	8	8	7	7	8	7	8	6	6	7	6	8
45	8	8	8	8	8	8	8	8	8	8	8	8	8	8	8	8	8	8	8	8	8	8	8	8	8	8	8	8	8	8	8	8	8	8	8	8	8	8	8	8	7	7	8	7	8	6	6	7	6	8						
50	8	8	8	8	8	8	8	8	8	8	8	8	8	8	8	8	8	8	8	8	8	8	8	8	8	8	8	8	8	8	8	8	8	8	8	8	8	8	8	8	7	6	8	6	8											
60	8	8	8	8	8	8	8	8	8	8	8	8	8	8	8	8	8	8	8	8	8	8	8	8	8	8	8	8	8	8	8	8	8	7	8	7	6	8	6	8	6	5	7	5	8											
70	8	8	8	8	8	8	8	8	8	8	8	8	8	8	8	8	8	8	8	8	7	7	8	7	8	8	7	8	7	8	7	6	8	6	8	6	5	7	5	8																
80	8	8	8	8	8	8	8	8	8	8	8	8	8	8	8	8	8	8	8	8	6	6	7	6	8	6	6	7	6	8	6	5	7	5	8	5	5	6	5	8																
90	8	8	8	8	8	8	8	8	8	8	8	8	8	8	8	7	7	8	7	8	6	5	6	5	8	6	5	6	5	8	5	5	6	5	8																				
100	8	8	8	8	8	8	8	8	8	8	8	8	8	8	8	7	6	7	6	8	5	5	6	5	8	5	5	6	4	8																										
110	8	8	8	8	8	8	8	8	8	8	8	8	8	7	8	6	5	7	5	8	5	4	5	4	8	4	4	5	4	8																										
120	8	8	8	8	8	8	8	8	8	8	8	7	8	7	8	5	5	6	5	8	4	4	5	4	8																															
130	8	8	8	8	8	8	8	8	8	8	7	6	7	6	8	5	4	5	4	8																																				
140	8	8	8	8	8	8	8	8	8	8	6	6	7	5	8																																									
150	8	8	8	8	8	8	8	8	8	8	6	5	6	5	8																																									
160	8	8	8	8	8	8	8	8	7	8																																														
180	8	8	8	8	8	7	7	8	6	8																																														

ENGINEER SEAL
PEDRO DE FIGUEIREDO
PE 52609

PPMF Inc.
ENGINEERING SERVICES - CA 32459
9715 W. BROWARD BLVD.
PLANTATION, FL 33324
PPMF@AOL.COM

PRODUCT NAME:
WIND ABATEMENT
SYSTEM - LARGE MISSILE
55 MM ROLLING DOOR SYSTEM

MANUFACTURER:
ADVANCED HURRICANE
TECHNOLOGIES
6063 JANES LANE
NAPLES, FLORIDA 34109
TEL: (239) 260-0020

AHT

SCALE:
NA

DATE:
04/11/19

DRAWING #
19-004

SHEET
8 OF 14

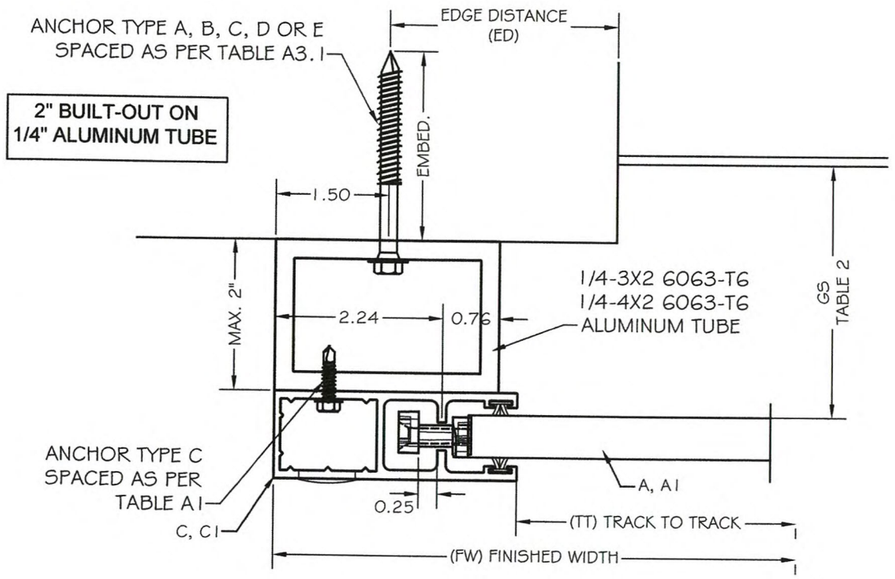

ANCHOR SCHEDULE:

ANCHOR	DESCRIPTION	MATERIAL	EMBEDMENT	EDGE DISTANCE
A	5/16" ITW TAPCONS XL	MIN. 3000 PSI CONCRETE	2 1/4"	2 3/16"
B	5/16" ITW TAPCONS XL	GROUT FILLED C-90 BLOCK	2 1/4"	4"
C	1/4"-14X1" GRADE 5 SELF DRILLING SCREWS	MIN. 1/4" 6063-T6 ALUM. OR A36 3/16" STEEL	3 TREADS 3 TREADS	1/2" 3/8"
D	5/16" ITW TAPCONS XL	WOOD WITH G>=.55	2 1/4"	1-1/4"
E	3/8" POWERS WEDGE BOLT	MIN. 3000 PSI CONCRETE	3 1/2"	4-1/2"

TABLE A3 - SPACING ON CENTER FOR 2" BUILT-OUT MOUNT INSTALLATION W/ ALUMINUM TUBE

LOAD (PSF)	TT = 84					TT = 96					TT = 120					TT = 144					TT = 168					TT = 180					TT = 192					TT = 216					TT = 240					TT = 264					TT = 288				
	A	B	C	D	E	A	B	C	D	E	A	B	C	D	E	A	B	C	D	E	A	B	C	D	E	A	B	C	D	E	A	B	C	D	E	A	B	C	D	E	A	B	C	D	E	A	B	C	D	E	A	B	C	D	E	A	B	C	D	E
30	8	8	8	8	8	8	8	8	8	8	8	8	8	8	8	8	8	8	8	8	8	8	8	8	8	8	8	8	8	8	8	8	8	8	8	7	6	7	6	8			4		8					6					5
35	8	8	8	8	8	8	8	8	8	8	8	8	8	8	8	8	8	8	8	8	8	8	8	8	8	8	8	8	8	8	8	8	8	8	8	5	4	5	4	8			3		7					5					5
40	8	8	8	8	8	8	8	8	8	8	8	8	8	8	8	8	8	8	8	8	8	8	8	8	8	8	8	8	8	8	6	6	7	5	8			4		8					6					5					
45	8	8	8	8	8	8	8	8	8	8	8	8	8	8	8	8	8	8	8	8	8	8	8	8	8	8	7	8	6	8	5	4	5	4	8			3		7					5										
50	8	8	8	8	8	8	8	8	8	8	8	8	8	8	8	8	8	8	8	8	5	5	5	4	8	6	5	6	4	8	4		4	3	8					6					5										
60	8	8	8	8	8	8	8	8	8	8	8	8	8	8	8	7	7	8	6	8			3		7			4		8					6					5																
70	8	8	8	8	8	8	8	8	8	8	8	8	8	8	8	4	4	5	3	8					5					6					5																						
80	8	8	8	8	8	8	8	8	8	8	8	8	8	8	8			3		7										5																										
90	8	8	8	8	8	8	8	8	8	8	7	6	7	5	8					6																																				
100	8	8	8	8	8	8	8	8	8	8	4	4	5	4	8					5																																				
110	8	8	8	8	8	8	8	8	8	8			4		8																																									
120	8	8	8	8	8	8	8	8	8	8			3		6																																									
130	8	8	8	8	8	8	7	8	6	8					6																																									
140	8	8	8	8	8	5	5	6	4	8					5																																									
150	8	8	8	8	8	5	4	5	4	8					5																																									
160	8	7	8	7	8	4		4	3	8																																															
180	6	5	6	5	8			3		7																																															

PEDRO M. DE FIGUEIREDO
LICENSE
No. 52609
STATE OF
FLORIDA
PROFESSIONAL ENGINEER

APR 22 2019

ENGINEER SEAL
PEDRO DE FIGUEIREDO
PE 52609

PPMF Inc.
ENGINEERING SERVICES - CA 32459
9715 W. BROWARD BLVD.
PLANTATION, FL 33324
PPMF@AOL.COM

PRODUCT NAME:
WIND ABATEMENT
SYSTEM - LARGE MISSILE
55 MM ROLLING DOOR SYSTEM

MANUFACTURER:
ADVANCED HURRICANE
TECHNOLOGIES
6063 JANES LANE
NAPLES, FLORIDA 34109
TEL: (239) 260-0020

AHT

SCALE:
NA

DATE:
04/11/19

DRAWING #
19-004

SHEET
9 OF 14

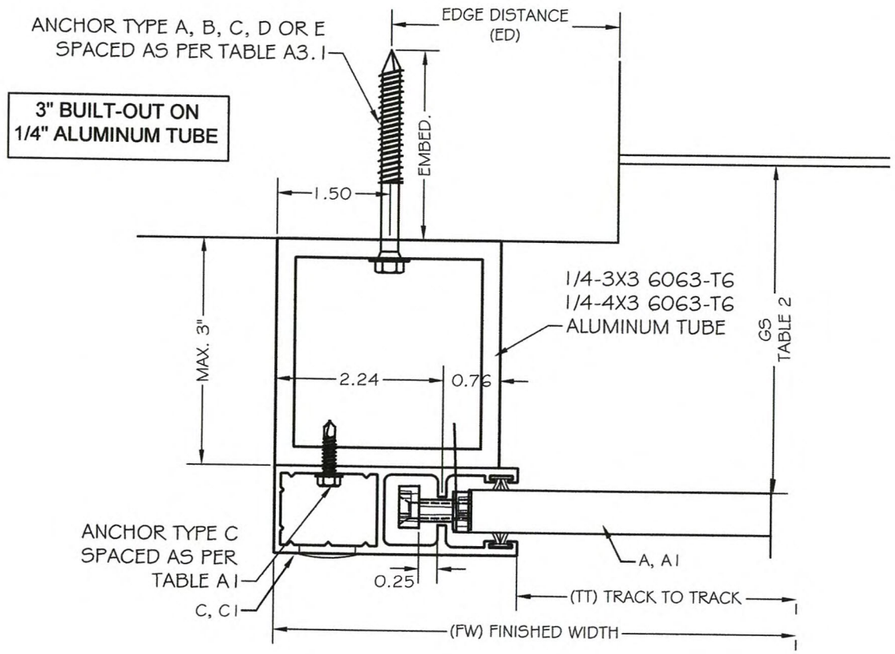

ANCHOR SCHEDULE:

ANCHOR	DESCRIPTION	MATERIAL	EMBEDMENT	EDGE DISTANCE
A	5/16" ITW TAPCONS XL	MIN. 3000 PSI CONCRETE	2 1/4"	2 3/16"
B	5/16" ITW TAPCONS XL	GROUT FILLED C-90 BLOCK	2 1/4"	4"
C	1/4"-14X1" GRADE 5 SELF DRILLING SCREWS	MIN. 1/4" 6063-T6 ALUM. OR A36 3/16" STEEL	3 TREADS 3 TREADS	1/2" 3/8"
D	5/16" ITW TAPCONS XL	WOOD WITH G>=.55	2 1/4"	1-1/4"
E	3/8" POWERS WEDGE BOLT	MIN. 3000 PSI CONCRETE	3 1/2"	4-1/2"

TABLE A3.1 - SPACING ON CENTER FOR 3" BUILT-OUT MOUNT INSTALLATION W/ ALUMINUM TUBE

LOAD (PSF)	TT = 84					TT = 96					TT = 120					TT = 144					TT = 168					TT = 180					TT = 192					TT = 216					TT = 240					TT = 264					TT = 288				
	A	B	C	D	E	A	B	C	D	E	A	B	C	D	E	A	B	C	D	E	A	B	C	D	E	A	B	C	D	E	A	B	C	D	E	A	B	C	D	E	A	B	C	D	E	A	B	C	D	E	A	B	C	D	E	A	B	C	D	E
30	8	8	8	8	8	8	8	8	8	8	8	8	8	8	8	8	8	8	8	8	8	8	8	8	8	8	8	8	8	8	8	8	8	8	8	6	5	6	5	8			3		7					5					
35	8	8	8	8	8	8	8	8	8	8	8	8	8	8	8	8	8	8	8	8	8	8	8	8	8	8	8	8	8	8	8	8	8	8	8			4	3	8					6											
40	8	8	8	8	8	8	8	8	8	8	8	8	8	8	8	8	8	8	8	8	8	8	8	8	8	8	8	8	8	8	5	5	6	4	8			3		7					5											
45	8	8	8	8	8	8	8	8	8	8	8	8	8	8	8	8	8	8	8	8	8	7	8	7	8	7	6	7	6	8	4		4	3	8					6																
50	8	8	8	8	8	8	8	8	8	8	8	8	8	8	8	8	8	8	8	8	4	4	5	4	8	5	4	5	4	8			3		7					5																
60	8	8	8	8	8	8	8	8	8	8	8	8	8	8	8	6	5	7	5	8					6			3		7					5																				
70	8	8	8	8	8	8	8	8	8	8	8	8	8	8	8			4	3	8										5																										
80	8	8	8	8	8	8	8	8	8	8	8	8	8	8	8					6																																				
90	8	8	8	8	8	8	8	8	8	8	5	5	6	5	8					5																																				
100	8	8	8	8	8	8	8	8	8	8			4	3	8																																									
110	8	8	8	8	8	8	8	8	8	8			3		7																																									
120	8	8	8	8	8	8	8	8	8	8					5																																									
130	8	8	8	8	8	6	6	7	5	8					5																																									
140	8	8	8	8	8	4	4	5	4	8																																														
150	8	8	8	8	8			4	3	8																																														
160	7	6	7	6	8			4		8																																														
180	5	4	5	4	8					6																																														

PEDRO M. DE FIGUEIREDO
LICENSE
No. 52609
STATE OF
FLORIDA
PROFESSIONAL ENGINEER

APR 22 2019

ENGINEER SEAL
PEDRO DE FIGUEIREDO
PE 52609

PPMF Inc.
ENGINEERING SERVICES - CA 32459
9715 W. BROWARD BLVD.
PLANTATION, FL 33324
PPMF@AOL.COM

PRODUCT NAME:
WIND ABATEMENT
SYSTEM - LARGE MISSILE
55 MM ROLLING DOOR SYSTEM

MANUFACTURER:
ADVANCED HURRICANE
TECHNOLOGIES
6063 JANES LANE
NAPLES, FLORIDA 34109
TEL: (239) 260-0020

AHT

SCALE:
NA

DATE:
04/11/19

DRAWING #
19-004

SHEET
10 OF 14

EQUALLY SPACED MULLIONS SELECTION

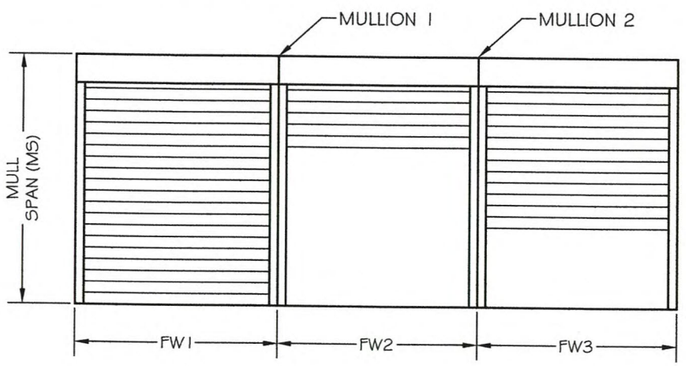

MULLION 1: TM1 = (FW1 + FW2) / 2
MULLION 2: TM2 = (FW2 + FW3) / 2
TM: TRIBUTARY MODULE

MULLIONS SECTIONS

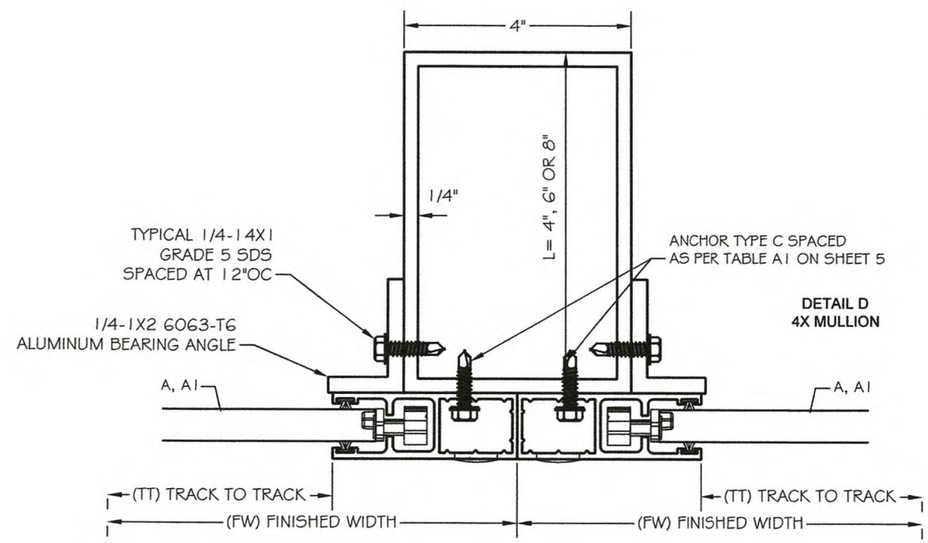

TABLE 4 - MULLIONS MAXIMUM DESIGNED PRESSURES (PSF)

DOOR TRIBUTARY MODULE (TM)	1/4-4x8 mullion span			1/4-4x6 mullion span			1/4-4x4 mullion span		
	144	132	120	120	108	96	96	84	72
294.5	27	30	30	23	30	30	17	25	30
270.5	29	38	43	25	34	43	18	27	43
246.5	32	42	56	27	38	54	20	30	48
222.5	36	46	62	30	42	60	22	33	53
210.5	38	49	65	32	44	63	24	35	56
186.5	42	55	74	36	50	71	27	40	63
162.5	49	63	85	42	57	82	31	46	72
150.5	53	68	91	45	61	88	33	49	78
126.5	63	81	109	54	73	105	40	59	93
102.5	77	100	134	66	90	129	49	72	115
90.5	87	114	152	75	102	146	55	82	130

NOTES:
1- MULLIONS WERE DESIGNED BY RATIONAL ANALYSIS BASED ON THE ALUMINUM DESIGN MANUAL 2015 ED. AND THE FLORIDA BUILDING CODE.
2- DEFLECTION CRITERIA: MAXIMUM MULL SPAN DIVIDED BY 180: (MS/180)
3- VALUES ABOVE IS APPLICABLE ONLY FOR EQUAL MODULES FW1=FW2=FW3.
4- UNEQUAL MODULES ARE TO BE DESIGNED BY RATIONAL ANALYSIS IN A CASE BY CASE BASIS.

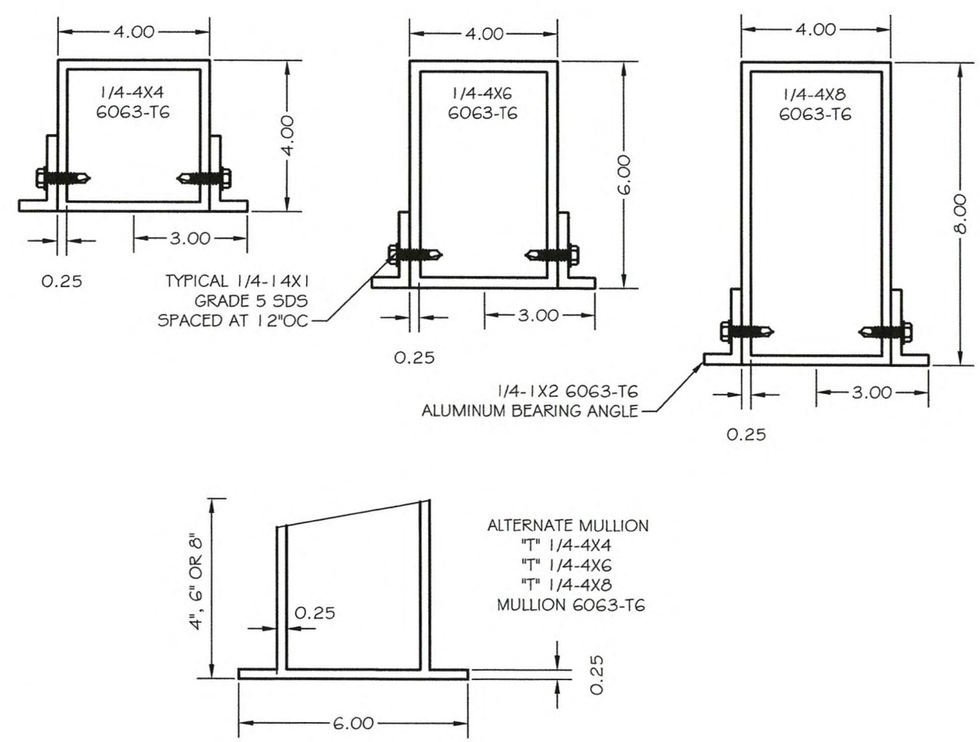

PEDRO M. DE FIGUEIREDO
LICENSE
No. 52609
STATE OF FLORIDA
PROFESSIONAL ENGINEER
APR 22 2019

ENGINEER SEAL
PEDRO DE FIGUEIREDO
PE 52609

PPMF Inc.
ENGINEERING SERVICES - CA 32459
9715 W. BROWARD BLVD.
PLANTATION, FL 33324
PPMF@AOL.COM

PRODUCT NAME:
WIND ABATEMENT SYSTEM - LARGE MISSILE
55 MM ROLLING DOOR SYSTEM

MANUFACTURER:
ADVANCED HURRICANE TECHNOLOGIES
6063 JANES LANE
NAPLES, FLORIDA 34109
TEL: (239) 260-0020

AHT

SCALE: NA
DATE: 04/11/19
DRAWING # 19-004
SHEET 11 OF 14

EQUALLY SPACED MULLIONS WALL CONNECTIONS

W9 - WALL MOUNT MOUNT
WITH (9) ANCHORS TYPE A OR B

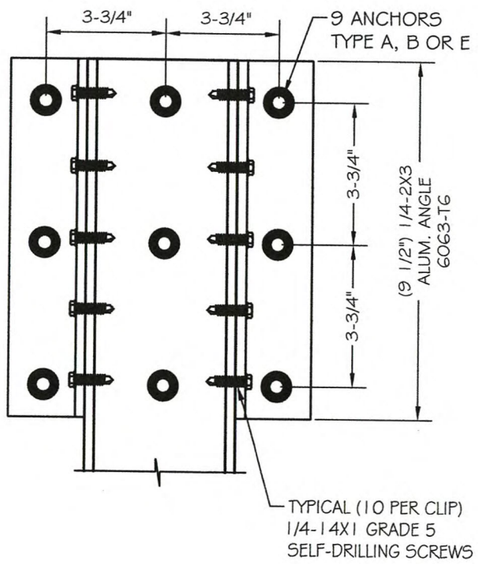

W6 - WALL MOUNT MOUNT
WITH (6) ANCHORS TYPE A OR B

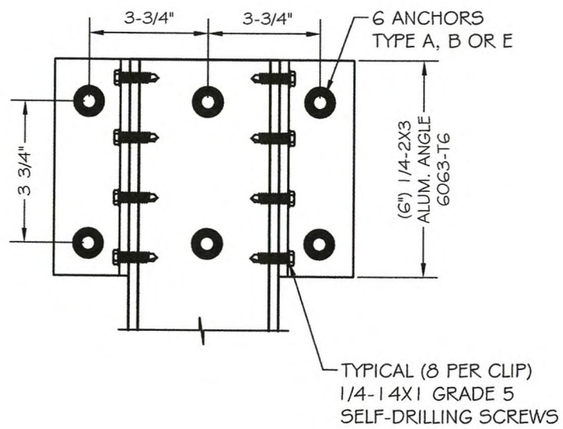

W4 - WALL MOUNT MOUNT
WITH (4) ANCHORS TYPE A, B OR E

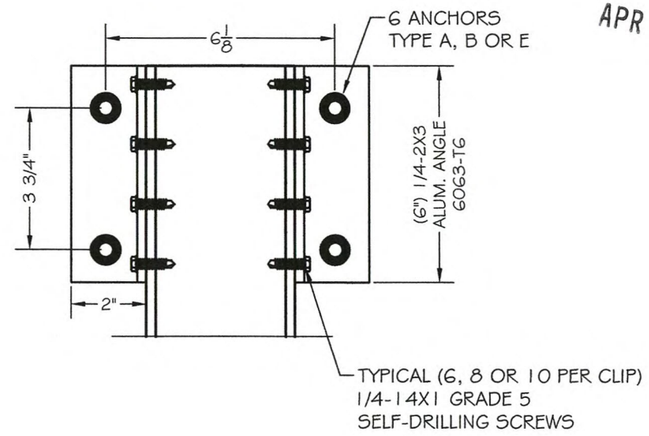

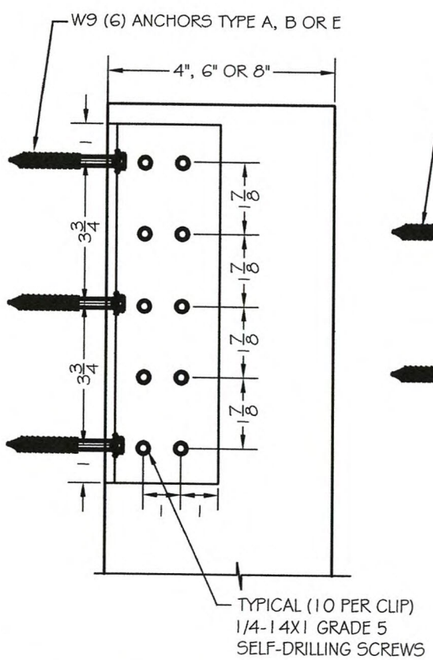

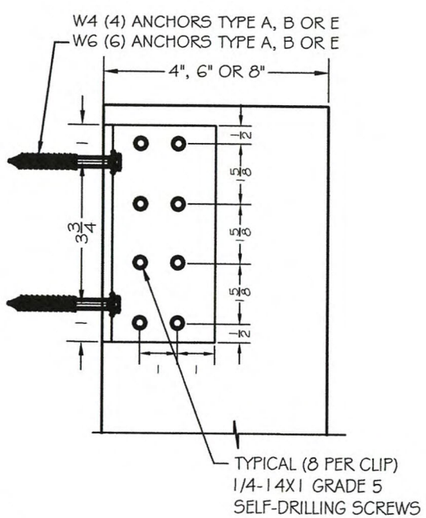

MULL WALL ANCHORAGE CAPACITY (Ra)

ANCHOR TYPE	W4 (LB)	W6 (LB)	W9 (LB)
A	3120	4680	7020
B	3016	4524	6786
E	3750	5625	11250

CALCULATING SERVICE REACTION (Rs):

1- (PD) - PROJECT DESIGNED PRESSURE CALCULATED AS PER GENERAL NOTE 4.
2- (TM) - TRIBUTARY MODULE TM AS PER SHEET 11
3- (MS) - MULL SPAN

SERVICE REACTION: Rs= PD X TM X MS / 144 / 2

Service Reaction must be lower or equal to anchorage capacity: Rs <= Ra

Example:
1- Project pressure: PD= ±47 psf
2- Two doors 180" wide with one 96" mull at middle
3- Tributary Module: TM= (180+180)/2 = 180"
4- Mullion Span: MS= 96"
5- Table 4 select 1/4-4x6 mull rated at 71 psf > 47 psf -- Ok
6- Wall Mounted with W4 condition anchor type A - Ra= 3120 lb
7- Calculate Rs as above:
Rs = 47 psf x 180" x 96" / 144 / 2 = 2820 LB
Rs = 2820 < Ra = 3120 (W4 Type A anchor type)

ANCHOR SCHEDULE:

ANCHOR	DESCRIPTION	SUBSTRATE	EMBEDMENT	EDGE DISTANCE
A	5/16"X3" TAPCONS XL	MIN. 3000 psi CONCRETE	2 1/4"	2 3/16"
B	5/16"X3" TAPCONS XL	GROUT FILLED C-90 BLOCK	2 1/4"	4"
E	3/8"X4" WEDGE BOLTS	MIN. 3000 psi CONCRETE	3"	4 1/2"

PEDRO M. DE FIGUEIREDO
LICENSE
No. 52609
STATE OF FLORIDA
PROFESSIONAL ENGINEER
APR 22 2019

ENGINEER SEAL
PEDRO DE FIGUEIREDO
PE 52609

PPMF Inc.
ENGINEERING SERVICES - CA 32459
9715 W. BROWARD BLVD.
PLANTATION, FL 33324
PPMF@AOL.COM

PRODUCT NAME:
WIND ABATEMENT
SYSTEM - LARGE MISSILE
55 MM ROLLING DOOR SYSTEM

MANUFACTURER:
ADVANCED HURRICANE TECHNOLOGIES
6063 JANES LANE
NAPLES, FLORIDA 34109
TEL: (239) 260-0020

AHT

SCALE: NA
DATE: 04/11/19
DRAWING # 19-004
SHEET 12 OF 14

EQUALLY SPACED MULLIONS FLOOR AND CEILING CONNECTIONS

1/4-4X8 MULLION
FLOOR/CEILING MOUNT

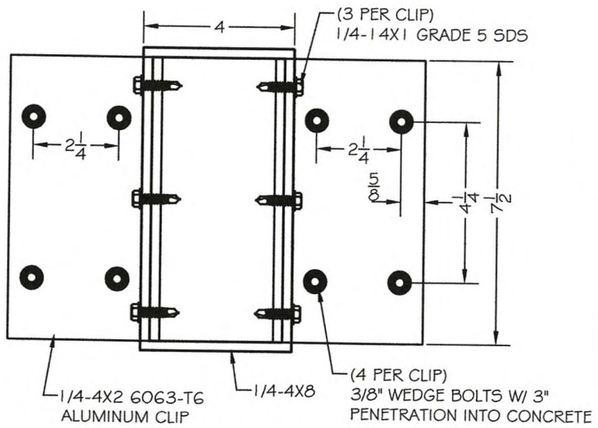

SECTION AA

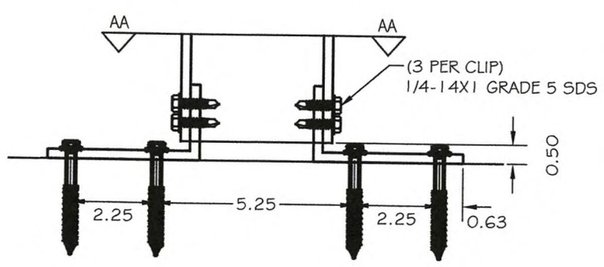

NOTE: ANGLE CLIP TO BE PLACED INSIDE TUBE

1/4-4X6 MULLION
FLOOR/CEILING MOUNT

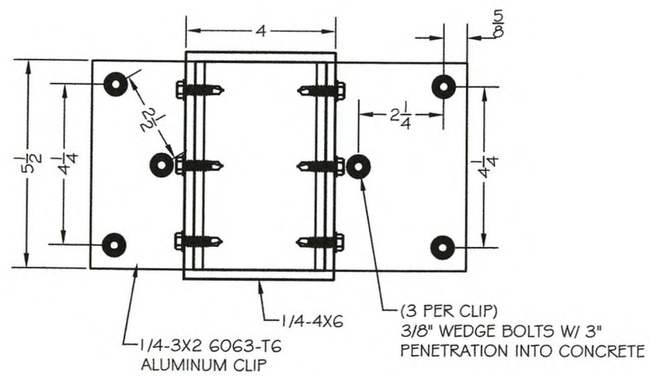

SECTION BB

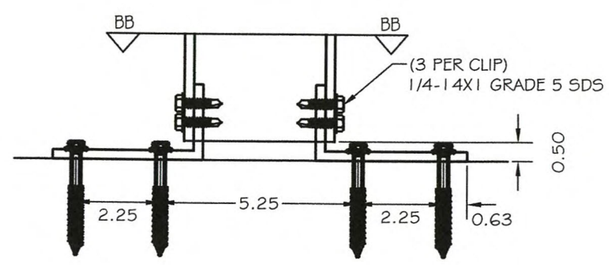

NOTE: ANGLE CLIP TO BE PLACED INSIDE TUBE

1/4-4X4 MULLION
FLOOR/CEILING MOUNT

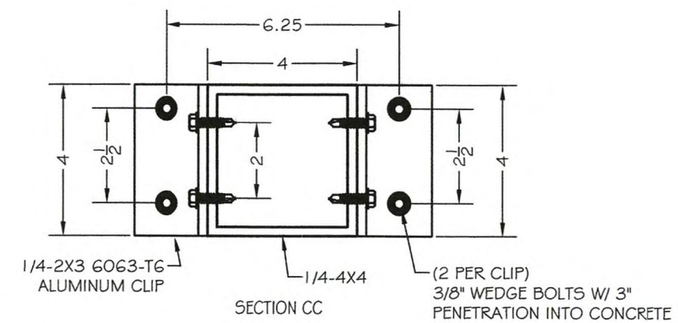

SECTION CC

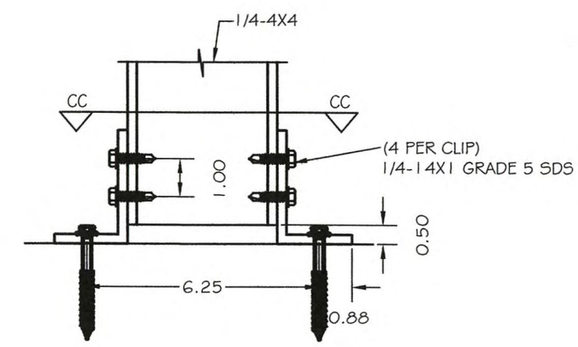

NOTE: ANGLE CLIP TO BE PLACED OUTSIDE OF TUBE

FLOOR / CEILING CONNECTION CAPACITY FUNCTION OF DESIGNED PRESSURES ON TABLE 4

PEDRO M. DE FIGUEIREDO
LICENSE
No. 52609
STATE OF
FLORIDA
PROFESSIONAL ENGINEER

APR 2 2 2019

ENGINEER SEAL
PEDRO DE FIGUEIREDO
PE 52609

PPMF Inc.
ENGINEERING SERVICES - CA 32459
9715 W. BROWARD BLVD.
PLANTATION, FL 33324
PPMF@AOL.COM

PRODUCT NAME:
WIND ABATEMENT
SYSTEM - LARGE MISSILE
55 MM ROLLING DOOR SYSTEM

MANUFACTURER:
ADVANCED HURRICANE
TECHNOLOGIES
6063 JANES LANE
NAPLES, FLORIDA 34109
TEL: (239) 260-0020

AHT

SCALE:
NA

DATE:
04/11/19

DRAWING #
19-004

SHEET
13 OF 14

HOOD ASSEMBLY

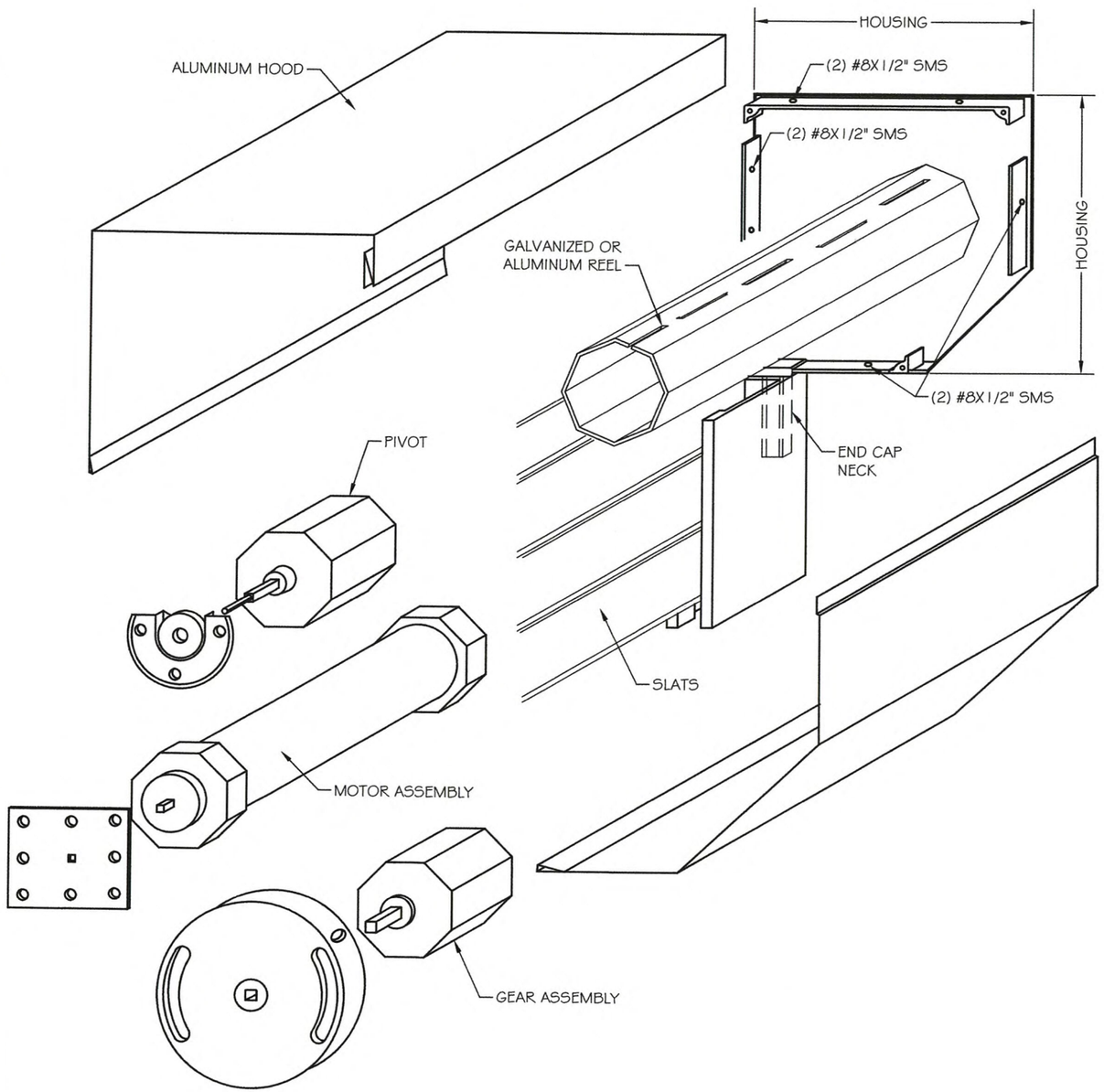

OPTIONAL STEEL BRACKET

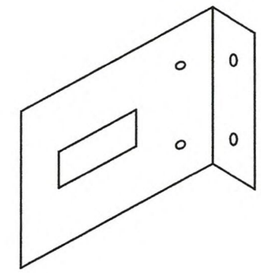

UP TO 100 LBS SHUTTER WEIGHT
(2) 5/16" TAPCON OR
(3) 1/4"Øx1" SMS

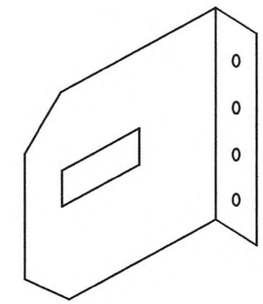

UP TO 350 LBS SHUTTER WEIGHT
(4) 5/16" TAPCON OR
(6) 1/4"Øx1" SMS

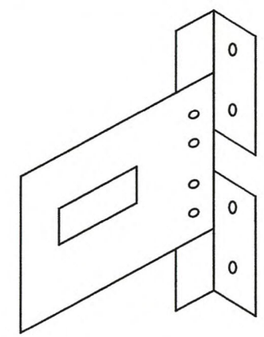

UP TO 200 LBS SHUTTER WEIGHT
(3) 5/16"Ø TAPCONS OR
(4) 1/4"Øx1" SMS

NOTE: THE ROLL-UP MECHANISM (GEARS, MOTORS, SUPPORTING END PLATES) ARE NOT PART OF THIS APPROVAL. MANUFACTURER IS RESPONSIBLE TO SPECIFY THESE COMPONENTS FOR PROPER SHUTTER OPERATION.

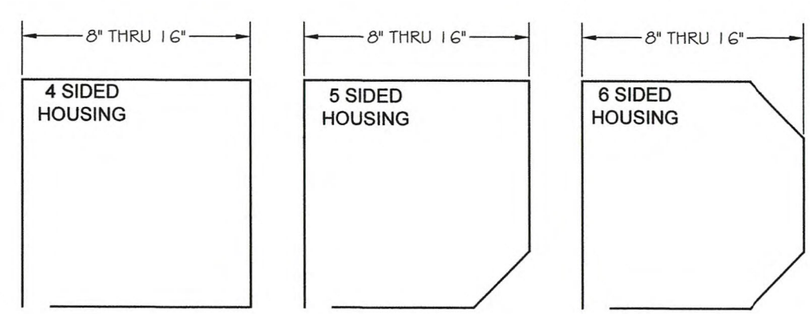

PEDRO M. DE FIGUEIREDO
LICENSE
No. 52609
STATE OF
FLORIDA
PROFESSIONAL ENGINEER

APR 22 2019

ENGINEER SEAL
PEDRO DE FIGUEIREDO
PE 52609

PPMF Inc.
ENGINEERING SERVICES - CA 32459
9715 W. BROWARD BLVD.
PLANTATION, FL 33324
PPMF@AOL.COM

PRODUCT NAME:
WIND ABATEMENT
SYSTEM - LARGE MISSILE
55 MM ROLLING DOOR SYSTEM

MANUFACTURER:
ADVANCED HURRICANE
TECHNOLOGIES
6063 JANES LANE
NAPLES, FLORIDA 34109
TEL: (239) 260-0020

AHT

SCALE:
NA

DATE:
04/11/19

DRAWING #
19-004

SHEET
14 OF 14